Mild Steel Enclosures (Type 12, 4)
page 2

Stainless Steel Enclosures (Type 4X)
page 42

Aluminum Enclosures (Type 4X)
page 68

Non-Metallic Enclosures (Type 4X)
page 76

Disconnect Enclosures
page 102

Modular Freestanding Enclosures
page 126

Operator Interface Enclosures
page 148

Wireway & Trough
page 182

Commercial Enclosures
page 202

Climate Control
page 232

General Accessories
page 266

© Hammond Manufacturing

Mild Steel Enclosures (Type 12, 4)

Type 4 Mild Steel Junction Box
Eclipse Junior Series
Continuous Hinge Door with Quarter Turn..... 4

Type 12 Mild Steel Junction Box
1414 Series
Lift-Off Cover with Clamps..... 5

Type 4 Mild Steel Junction Box
1414 N4 Series
Lift-Off Cover with Clamps..... 6

Type 4, 12 Mild Steel Junction Box
HJ Series
Lift-Off Cover with Clamps..... 7

Type 12 Mild Steel Junction Box
1414 PH Series
Continuous Hinge Door with Clamps..... 8

Type 4 Mild Steel Junction Box
1414 N4 PH Series
Continuous Hinge Door with Clamps..... 9

Type 4, 12 Mild Steel Junction Box
HJ H Series
Continuous Hinge Door with Clamps..... 10

Type 12 Mild Steel Junction Box
1414 SC Series
Lift-Off Cover with Screws 11

Type 12 Mild Steel Junction Box
1436/1438 Series
Lift-Off Cover with Screws 12

Type 12 Mild Steel Wallmount Enclosure
1418J Series
Continuous Hinge Door with Screws 13

Type 4 Mild Steel Wallmount Enclosure
Eclipse Series
Hinge Door with Quarter Turn/Handle 14

Type 4 Mild Steel Wallmount Enclosure w/ Window
Eclipse Series
Hinge Door with Quarter Turn..... 18

NEMA Rated Swing-Out Wall Mount Cabinet
EN4DH Series
Up to 180 lbs Weight Capacity 20

Type 4 Mild Steel Wallmount Enclosure w/ Sloped Top
ST Series
Hinge Door with Quarter Turn..... 22

Type 12 Mild Steel Two Door Wallmount Enclosure
Eclipse Series
Hinge Door with Handle..... 17

Type 12 Mild Steel Wallmount Enclosure
1418 Series
Continuous Hinge Door with Clamps..... 24

Type 4 Mild Steel Wallmount Enclosure
1418 N4 Series
Continuous Hinge Door with Clamps..... 26

Type 12 Mild Steel Two Door Wallmount Enclosure
1422 Series
Continuous Hinge Door with Handle 28

Type 4 Mild Steel Wallmount Enclosure
HWHK Series
Hinge Door with Handle..... 29

Type 4 Two Door Wallmount Enclosure
HN4 WM Series
Continuous Hinge Door with Handle 30

Type 12 Mild Steel Two Door Floormount Enclosure
1422 FM Series
Continuous Hinge Door with Handle 31

Type 4 Mild Steel Two Door Floormount Enclosure
1422 N4 FM Series
Continuous Hinge Door with Clamps..... 32

Distributed by Gross Automation | +1 (262) 252-1600. | hammondsales@grossautomation.com

Technical references and CAD downloads available at www.hammondmfg.com

All dimensions in inches unless specified otherwise

Quality Products. Service Excellence.

© Hammond Manufacturing

Canada: 519.822.2960 or 905.456.3770 USA: 716.630.7030

Data Subject to change without notice

Mild Steel Enclosures (Type 12, 4)

Type 4 Mild Steel Two Door Floormount Enclosure
1422 N4 FM QT Series
Continuous Hinge Door with Quarter Turn..... 33

Type 4 Mild Steel Two Door Floormount Enclosure
HN4 FM Series
Continuous Hinge Door with Handle 34

Type 12 Mild Steel Freestanding Enclosure
1418 FS Series
Continuous Hinge Door with Handle 35

Type 4 Mild Steel Freestanding Enclosure
1418 N4 FS Series
Continuous Hinge Door with Clamps..... 37

Type 4 Mild Steel Freestanding Enclosure
1418 N4 FS QT Series
Continuous Hinge Door with Quarter Turn..... 38

Type 4 Mild Steel Freestanding Enclosure
HN4 FS Series
Continuous Hinge Door with Handle 39

Type 12 Mild Steel Two Door Freestanding Enclosure
1418 FS Series
Continuous Hinge Door with Handle 40

Type 12 Mild Steel Multi-Door Freestanding Enclosure
1422 MD Series
Continuous Hinge Door with Handle 41

© Hammond Manufacturing

Type 4 Mild Steel Junction Box *Eclipse Junior Series*

Continuous Hinge Door with Quarter Turn

- Models larger than 4”x4” include a removable 14 gauge galvanized inner panel.
- Internal threaded weld studs are provided for mounting inner panels.
- A bonding stud is provided on the door and a grounding stud is provided on the enclosure.
- Grounding and panel mounting hardware provided.

Finish

- Cover and enclosure are finished with a recoatable powder inside and out with choice of ANSI 61 smooth Gray (GY) or RAL7035 textured light gray (LG).
- Inner panels are unpainted galvanized steel.

Accessories

- Additional Inner Panels...*See Page* ***280***
- Swing Panel Kit...*See Page* ***288***
- Terminal Kit Assemblies...*See Page* ***288***
- Padlock Adaptor...*See Page* ***272***
- Quarter Turn Assemblies...*See Page* ***273***
- Climate Control...*See Page* ***234***
- General Accessories...*See Page* ***268***

Quick Link: hammfg.com/EJ

Application

- Designed to enclose electrical and/or electronic equipment and protect against harsh, industrial environments.
- For use as instrument enclosures, electric, hydraulic or pneumatic control housings, electrical junction boxes or terminal wiring enclosures.
- Impressive styling features make the Eclipse Junior a suitable addition to any high-tech equipment installation.

Standards

- UL 508A Type 3R, 4, 12 and 13
- CSA Type 3R, 4, 12 and 13
- Complies with
  - NEMA Type 3R, 4, 12 and 13
  - IEC 60529, IP66

Construction

- Body and cover are formed from 16 gauge steel.
- Smooth, continuously welded seams without knockouts, cutouts, or holes.
- Formed lip on enclosure to exclude flowing liquids and contaminants.
- 14 gauge welded brackets provide for enclosure mounting.
- Continuously hinged cover has 304 stainless steel hinges and provides 180° opening.
- Door latches feature the added safety of quarter turn slot requiring use of tool for opening.
- Quarter turn latches formed from black zinc diecast.
- Seamless poured-in place gasket.

ANSI 61 Gray	RAL 7035 Light Gray	Enclosure			Panel	
Part No.	Part No.	H	W	D	H	W
EJ443	EJ443LG	4.00	4.00	3.00	-	-
EJ643	EJ643LG	6.00	4.00	3.00	4.88	2.88
EJ683	EJ683LG	6.00	8.00	3.50	4.88	6.75
EJ863	EJ863LG	8.00	6.00	3.50	6.75	4.88
EJ444	EJ444LG	4.00	4.00	4.00	-	-
EJ644	EJ644LG	6.00	4.00	4.00	4.88	2.88
EJ664	EJ664LG	6.00	6.00	4.00	4.88	4.88
EJ884	EJ884LG	8.00	8.00	4.00	6.75	6.88
EJ8104	EJ8104LG	8.00	10.00	4.00	6.88	8.75
EJ1084	EJ1084LG	10.00	8.00	4.00	8.75	6.88
EJ1264	EJ1264LG	12.00	6.00	4.00	10.75	4.88
EJ12124	EJ12124LG	12.00	12.00	4.00	10.75	10.88
EJ10125	EJ10125LG	10.00	12.00	5.00	8.88	10.75
EJ12105	EJ12105LG	12.00	10.00	5.00	10.75	8.88
EJ866	EJ866LG	8.00	6.00	6.00	6.75	4.88
EJ1086	EJ1086LG	10.00	8.00	6.00	8.75	6.88
EJ10106	EJ10106LG	10.00	10.00	6.00	8.75	8.88
EJ12126	EJ12126LG	12.00	12.00	6.00	10.75	10.88
EJ12146	EJ12146LG	12.00	14.00	6.00	10.88	12.75
EJ1486	EJ1486LG	14.00	8.00	6.00	12.75	6.88
EJ14126	EJ14126LG	14.00	12.00	6.00	12.75	10.88
EJ14166	EJ14166LG	14.00	16.00	6.00	12.88	14.75
EJ16106	EJ16106LG	16.00	10.00	6.00	14.75	8.88
EJ16146	EJ16146LG	16.00	14.00	6.00	14.75	12.88
EJ12108	EJ12108LG	12.00	10.00	8.00	10.75	8.88
EJ14128	EJ14128LG	14.00	12.00	8.00	12.75	10.88
EJ16148	EJ16148LG	16.00	14.00	8.00	14.75	12.88
EJ161410	EJ161410LG	16.00	14.00	10.00	14.75	12.88

Distributed by Kloss Automation | +1 (262) 252-1600 | hammondsales@klossautomation.com

Technical references and CAD downloads available at www.hammondmfg.com

All dimensions in inches unless specified otherwise

Quality Products. Service Excellence.

© Hammond Manufacturing

Canada: 519.822.2960 or 905.456.3770 USA: 716.630.7030

Data Subject to change without notice

Type 12 Mild Steel Junction Box *1414 Series*

Lift-Off Cover with Clamps

Quick Link: hammfg.com/1414

Application

- Designed for use as instrument enclosures, electric, hydraulic or pneumatic control housings, electrical junction boxes or terminal wiring enclosures.
- Provides a degree of protection from falling dirt, dust, oil and water.

Standards

- UL 508A Type 12 and 13
- CSA Type 12 and 13
- Complies with
  - NEMA Type 12 and 13
  - IEC 60529, IP54

Construction

- Body formed from 16 gauge or 14 gauge steel. Covers are formed from 14 gauge steel.
- Smooth, continuously welded seams without knockouts, cutouts or holes.
- Welded brackets provide for enclosure mounting.
- Lift off cover is secured with stainless steel clamps and plated steel screws and retained with a plated chain when open.
- Seamless poured-in place gasket.
- Models larger than 4" x 4" include a removable 14 gauge inner panel.
- Internal threaded weld studs are provided for mounting inner panels.
- A bonding stud is provided on the door and a grounding stud is provided on the enclosure.

Finish

- Cover and enclosure are phosphatized and finished in ANSI 61 gray recoatable powder coating.
- Removable inner panel is finished in white powder coating.

Accessories

- Additional Inner Panels...*See Page* ***280***
- Terminal Kit Assemblies...*See Page* ***288***
- Swing Panel Kit...*See Page* ***288***
- Door Clamping Hardware...*See Page* ***268***
- Climate Control...*See Page* ***234***
- General Accessories...*See Page* ***268***

	Enclosure			Panel	
Part No.	H	W	D	H	W
1414A	4.00	4.00	3.00	-	-
1414C	6.00	4.00	3.00	4.88	2.88
1414G	8.00	6.00	3.50	6.75	4.88
1414A4	4.00	4.00	4.00	-	-
1414C4	6.00	4.00	4.00	4.88	2.88
1414E	6.00	6.00	4.00	4.88	4.88
1414I	10.00	8.00	4.00	8.75	6.88
1414K	12.00	10.00	5.00	10.75	8.88
1414M6	14.00	12.00	6.00	12.75	10.88
1414O6	16.00	14.00	6.00	14.75	12.88
1414M8	14.00	12.00	8.00	12.75	10.88
1414O10	16.00	14.00	10.00	14.75	12.88

Distributed by Gross Automation | +1 (262) 252-1601 | hammondsales@grossautomation.com

Technical references and CAD downloads available at www.hammondmfg.com

All dimensions in inches unless specified otherwise

© Hammond Manufacturing

Canada: 519.822.2960 or 905.456.3770 USA: 716.630.7030

Data Subject to change without notice

Type 4 Mild Steel Junction Box *1414 N4 Series*

Lift-Off Cover with Clamps

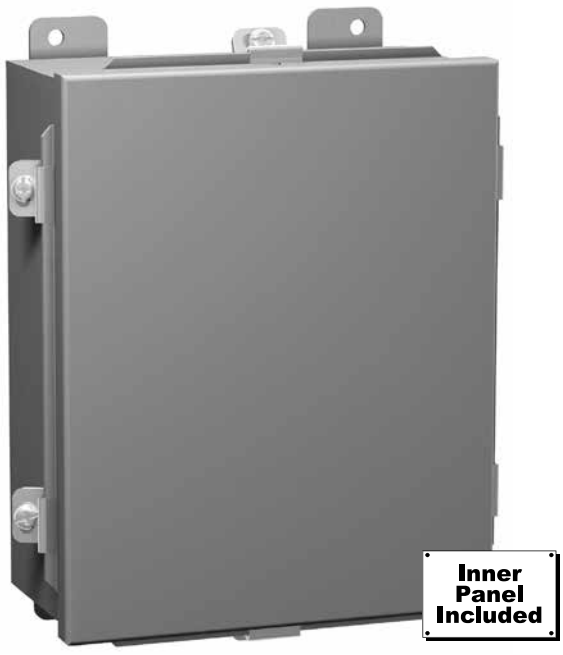

Quick Link: hammfg.com/1414N4

Application

- Designed for use as instrument enclosures, electric, hydraulic or pneumatic control housings, electrical junction boxes or terminal wiring enclosures.
- Provides protection where equipment may be hosed down or otherwise be very wet, or in outdoor applications for full weather protection.

Standards

- UL 508A Type 3R, 4, 12 and 13
- CSA Type 3R, 4, 12 and 13
- Complies with
  - NEMA Type 3R, 4, and 12
  - IEC 60529, IP66

Construction

- Body formed from 16 or 14 gauge steel. Covers are formed from 14 gauge steel.
- Smooth, continuously welded seams without knockouts, cutouts or holes.
- Welded brackets provide for enclosure mounting.
- Lift off cover is secured with stainless steel clamps and screws.
- Seamless poured-in place gasket.
- All models larger than 4" x 4" include a removable 14 gauge inner panel.
- Internal threaded weld studs are provided for mounting inner panels.
- A bonding stud is provided on the door and a grounding stud is provided on the enclosure.

Finish

- Cover and enclosure are phosphatized, finished in recoatable smooth ANSI 61 gray powder coating.
- Removable inner panel is finished in white powder coating.

Accessories

- Additional Inner Panels...*See Page* ***280***
- Terminal Kit Assemblies...*See Page* ***288***
- Swing Panel Kit...*See Page* ***288***
- Door Clamping Hardware...*See Page* ***268***
- Climate Control...*See Page* ***234***
- General Accessories...*See Page* ***268***

	Enclosure			Panel	
Part No.	H	W	D	H	W
1414N4A [1]	4.00	4.00	3.00	-	-
1414N4C	6.00	4.00	3.00	4.88	2.88
1414N4G	8.00	6.00	3.50	6.75	4.88
1414N4E	6.00	6.00	4.00	4.88	4.88
1414N4I	10.00	8.00	4.00	8.75	6.88
1414N4K	12.00	10.00	5.00	10.75	8.88
1414N4M6	14.00	12.00	6.00	12.75	10.88
1414N4O6	16.00	14.00	6.00	14.75	12.88
1414N4M8	14.00	12.00	8.00	12.75	10.88
1414N4O10	16.00	14.00	10.00	14.75	12.88

[1] Panel not included

Distributed by Gross Automation | +1 (262) 252-1600. | hammondsales@grossautomation.com

Technical references and CAD downloads available at www.hammondmfg.com

All dimensions in inches unless specified otherwise

Quality Products. Service Excellence.
© Hammond Manufacturing
Canada: 519.822.2960 or 905.456.3770 USA: 716.630.7030
Data Subject to change without notice

Type 4, 12 Mild Steel Junction Box *HJ Series*

Lift-Off Cover with Clamps

Quick Link: hammfg.com/HJ

Application

- Designed for use as instrument enclosures, electric, hydraulic or pneumatic control housings, electrical junction boxes or terminal wiring enclosures.
- Provides a degree of protection from falling dirt, dust, oil and water.

Standards

- UL 508A Type 3R, 4, 12 and 13
- CSA Type 3R, 4, 12 and 13
- Complies with
  - NEMA Type 3R, 4, 12 and 13
  - IEC 60529, IP66

Construction

- Body formed from 16 gauge or 14 gauge steel. Covers are formed from 14 gauge steel.
- Smooth, continuously welded seams without knockouts, cutouts or holes.
- Welded brackets provide for enclosure mounting.
- Lift off cover is secured with stainless steel clamps and stainless steel screws and retained with a stainless steel chain when open.
- Seamless poured-in place gasket.
- Internal threaded weld studs are provided for mounting inner panels.
- A bonding stud is provided on the door and a grounding stud is provided on the enclosure.

Finish

- Cover and enclosure are phosphatized and finished in ANSI 61 gray recoatable powder coating

Accessories

- Additional Inner Panels...*See Page* ***280***
- Terminal Kit Assemblies...*See Page* ***288***
- Swing Panel Kit...*See Page* ***288***
- Door Clamping Hardware...*See Page* ***268***
- Climate Control...*See Page* ***234***
- General Accessories...*See Page* ***268***

	Enclosure			Optional Inner Panel		
Part No.	H	W	D	Part No.	H	W
HJ443LP	4.00	4.00	3.00	**-**	-	-
HJ643LP	6.00	4.00	3.00	**14R0503**	4.88	2.88
HJ863LP	8.00	6.00	3.50	**14R0705**	6.75	4.88
HJ444LP	4.00	4.00	4.00	**-**	-	-
HJ644LP	6.00	4.00	4.00	**14R0503**	4.88	2.88
HJ664LP	6.00	6.00	4.00	**14R0505**	4.88	4.88
HJ1084LP	10.00	8.00	4.00	**14R0907**	8.75	6.88
HJ12105LP	12.00	10.00	5.00	**14R1109**	10.75	8.88
HJ14126LP	14.00	12.00	6.00	**14R1311**	12.75	10.88
HJ16146LP	16.00	14.00	6.00	**14R1513**	14.75	12.88
HJ14128LP	14.00	12.00	8.00	**14R1311**	12.75	10.88
HJ161410LP	16.00	14.00	10.00	**14R1513**	14.75	12.88

Alternative inner panel options also available.

Datasheet Orders Automation | +1 (262) 252-1600 | mailto:mfgsales@hammfg.com

Technical references and CAD downloads available at www.hammondmfg.com

All dimensions in inches unless specified otherwise

© Hammond Manufacturing

Type 12 Mild Steel Junction Box *1414 PH Series*

Continuous Hinge Door with Clamps

Quick Link: hammfg.com/1414PH

Application

- Designed for use as instrument enclosures, electric, hydraulic or pneumatic control housings, electrical junction boxes or terminal wiring enclosures.
- Provides a degree of protection from falling dirt, dust, oil and water.

Standards

- UL 508A Type 12, 13
- CSA Type 12, 13
- Complies with
  - NEMA Type 12 and 13
  - IEC 60529, IP54

Construction

- Body formed from 16 gauge or 14 gauge steel. Covers are formed from 14 gauge steel.
- Smooth, continuously welded seams without knockouts, cutouts or holes.
- Welded brackets provide for enclosure mounting.
- Continuously hinged cover is secured with stainless steel clamps and plated steel screws.
- Seamless poured-in place gasket.
- Models larger than 4" x 4" include a removable 14 gauge inner panel.
- Internal threaded weld studs are provided for mounting inner panels.
- A bonding stud is provided on the door and a grounding stud is provided in the enclosure.

Finish

- Cover and enclosure are phosphatized and finished in ANSI 61 gray recoatable powder coating.
- Removable inner panel is finished in white powder coating.

Accessories

- Additional Inner Panels...*See Page* ***280***
- Terminal Kit Assemblies...*See Page* ***288***
- Swing Panel Kit...*See Page* ***288***
- Door Clamping Hardware...*See Page* ***268***
- Junction Box Quick Release Clamp...*See Page* ***268***
- Climate Control...*See Page* ***234***
- Junction Box Padlock Kit...*See Page* ***268***
- General Accessories...*See Page* ***268***

	Enclosure			Panel	
Part No.	H	W	D	H	W
1414PHA	4.00	4.00	3.00	no panel	
1414PHC	6.00	4.00	3.00	4.88	2.88
1414PHG	8.00	6.00	3.50	6.75	4.88
1414PHRG	6.00	8.00	3.50	4.88	6.75
1414PHA4	4.00	4.00	4.00	no panel	
1414PHC4	6.00	4.00	4.00	4.88	2.88
1414PHE	6.00	6.00	4.00	4.88	4.88
1414PHH4	8.00	8.00	4.00	6.75	6.88
1414PHI	10.00	8.00	4.00	8.75	6.88
1414PHRI	8.00	10.00	4.00	6.88	8.75
1414PHKC4	12.00	6.00	4.00	10.75	4.88
1414PHK	12.00	10.00	5.00	10.75	8.88
1414PHRK	10.00	12.00	5.00	8.88	10.75
1414PHG6	8.00	6.00	6.00	6.75	4.88
1414PHI6	10.00	8.00	6.00	8.75	6.88
1414PHJ6	10.00	10.00	6.00	8.75	8.88
1414PHL6	12.00	12.00	6.00	10.75	10.88
1414PHMH6	14.00	8.00	6.00	12.75	6.88
1414PHM6	14.00	12.00	6.00	12.75	10.88
1414PHRM6	12.00	14.00	6.00	10.88	12.75
1414PHN6	16.00	10.00	6.00	14.75	8.88
1414PHO6	16.00	14.00	6.00	14.75	12.88
1414PHRO6	14.00	16.00	6.00	12.88	14.75
1414PHK8	12.00	10.00	8.00	10.75	8.88
1414PHM8	14.00	12.00	8.00	12.75	10.88
1414PHO8	16.00	14.00	8.00	14.75	12.88
1414PHO10	16.00	14.00	10.00	14.75	12.88

Distributed by Gross Automation | +1 (262) 252-1600 | hammondsales@grossautomation.com

Technical references and CAD downloads available at www.hammondmfg.com

All dimensions in inches unless specified otherwise

Quality Products. Service Excellence.

© Hammond Manufacturing

Canada: 519.822.2960 or 905.456.3770 USA: 716.630.7030

Data Subject to change without notice

Type 4 Mild Steel Junction Box *1414 N4 PH Series*

Continuous Hinge Door with Clamps

Quick Link: hammfg.com/1414N4PH

Application

- Designed for use as instrument enclosures, electric, hydraulic or pneumatic control housings, electrical junction boxes or terminal wiring enclosures.
- Provides protection where equipment may be hosed down or otherwise be very wet, or in outdoor applications for full weather protection.

Standards

- UL 508A Type 3R, 4, 12 and 13
- CSA Type 3R, 4, 12 and 13
- Complies with
  - NEMA Type 3R, 4, 12 and 13
  - IEC 60529, IP66

Construction

- Body formed from 16 or 14 gauge steel. Covers are formed from 14 gauge steel.
- Smooth, continuously welded seams without knockouts, cutouts or holes.
- Welded brackets provide for enclosure mounting.
- Continuous hinged cover is secured with stainless steel clamps and screws.
- Stainless steel continuous hinge on door may be removed by pulling the stainless steel hinge pin.
- Seamless poured-in place gasket.
- All models larger than 4" x 4" include a removable 14 gauge inner panel.
- Internal threaded weld studs are provided for mounting inner panels.
- A bonding stud is provided on the door and a grounding stud is provided in the enclosure.

Finish

- Cover and enclosure are phosphatized, finished in recoatable smooth ANSI 61 gray powder coating.
- Removable inner panel is finished in white powder coating.

Accessories

- Additional Inner Panels...*See Page* ***280***
- Terminal Kit Assemblies...*See Page* ***288***
- Swing Panel Kit...*See Page* ***288***
- Door Clamping Hardware...*See Page* ***268***
- Junction Box Quick Release Clamp...*See Page* ***268***
- Junction Box Padlock Kit...*See Page* ***268***
- Climate Control...*See Page* ***234***
- General Accessories...*See Page* ***268***

	Enclosure			Panel	
Part No.	H	W	D	H	W
1414N4PHA	4.00	4.00	3.00	no panel	
1414N4PHC	6.00	4.00	3.00	4.88	2.88
1414N4PHG	8.00	6.00	3.50	6.75	4.88
1414N4PHE	6.00	6.00	4.00	4.88	4.88
1414N4PHI	10.00	8.00	4.00	8.75	6.88
1414N4PHI6	10.00	8.00	6.00	8.75	6.88
1414N4PHK	12.00	10.00	5.00	10.75	8.88
1414N4PHL6	12.00	12.00	6.00	10.75	10.88
1414N4PHM6	14.00	12.00	6.00	12.75	10.88
1414N4PHO6	16.00	14.00	6.00	14.75	12.88
1414N4PHM8	14.00	12.00	8.00	12.75	10.88
1414N4PHO10	16.00	14.00	10.00	14.75	12.88

Distributed by Grossenbacher | +1 (262) 252-1605 | hammondsales@grossenbacher.com

Technical references and CAD downloads available at www.hammondmfg.com

All dimensions in inches unless specified otherwise

© Hammond Manufacturing

Type 4, 12 Mild Steel Junction Box *HJ H Series*

Continuous Hinge Door with Clamps

Quick Link: hammfg.com/HJH

Application

- Designed for use as instrument enclosures, electric, hydraulic or pneumatic control housings, electrical junction boxes or terminal wiring enclosures.
- Provides protection where equipment may be hosed down or otherwise be very wet, or in outdoor applications for full weather protection.

Standards

- UL 508A Type 3R, 4, 12 and 13
- CSA Type 3R, 4, 12 and 13
- Complies with
  - NEMA Type 3R, 4, 12 and 13
  - IEC 60529, IP66

Construction

- Body formed from 16 or 14 gauge steel. Covers are formed from 14 gauge steel.
- Smooth, continuously welded seams without knockouts, cutouts or holes.
- Welded brackets provide for enclosure mounting.
- Continuous hinged cover is secured with stainless steel clamps and screws.
- Stainless steel continuous hinge on door may be removed by pulling the stainless steel hinge pin.
- Seamless poured-in place gasket.
- Internal threaded weld studs are provided for mounting inner panels.
- A bonding stud is provided on the door and a grounding stud is provided in the enclosure.

Finish

- Cover and enclosure are phosphatized, finished in recoatable smooth ANSI 61 gray powder coating.

Accessories

- Additional Inner Panels...*See Page* **280**
- Terminal Kit Assemblies...*See Page* **288**
- Swing Panel Kit...*See Page* **288**
- Door Clamping Hardware...*See Page* **268**
- Junction Box Quick Release Clamp...*See Page* **268**
- Junction Box Padlock Kit...*See Page* **268**
- Climate Control...*See Page* **234**
- General Accessories...*See Page* **268**

	Enclosure			Optional Mounting Panel		
Part No.	H	W	D	Part No.	H	W
HJ443HLP	4.00	4.00	3.00	-	-	-
HJ643HLP	6.00	4.00	3.00	14R0503	4.88	2.88
HJ863HLP	8.00	6.00	3.50	14R0705	6.75	4.88
HJ683HLP	6.00	8.00	3.50	14R0705	6.75	4.88
HJ444HLP	4.00	4.00	4.00	-	-	-
HJ644HLP	6.00	4.00	4.00	14R0503	4.88	2.88
HJ664HLP	6.00	6.00	4.00	14R0505	4.88	4.88
HJ884HLP	8.00	8.00	4.00	14R0707	6.75	6.88
HJ1084HLP	10.00	8.00	4.00	14R0907	8.75	6.88
HJ8104HLP	8.00	10.00	4.00	14R0907	8.75	6.88
HJ1264HLP	12.00	6.00	4.00	14R1105	10.75	4.88
HJ12105HLP	12.00	10.00	5.00	14R1109	10.75	8.88
HJ10125HLP	10.00	12.00	5.00	14R1109	10.75	8.88
HJ866HLP	8.00	6.00	6.00	14R0705	6.75	4.88
HJ1086HLP	10.00	8.00	6.00	14R0907	8.75	6.88
HJ10106HLP	10.00	10.00	6.00	14R0909	8.75	8.88
HJ12126HLP	12.00	12.00	6.00	14R1111	10.75	10.88
HJ1486HLP	14.00	8.00	6.00	14R1307	12.75	6.88
HJ14126HLP	14.00	12.00	6.00	14R1311	12.75	10.88
HJ12146HLP	12.00	14.00	6.00	14R1311	12.75	10.88
HJ16106HLP	16.00	10.00	6.00	14R1509	14.75	8.88
HJ16146HLP	16.00	14.00	6.00	14R1513	14.75	12.88
HJ14166HLP	14.00	16.00	6.00	14R1513	14.75	12.88
HJ12108HLP	12.00	10.00	8.00	14R1109	10.75	8.88
HJ14128HLP	14.00	12.00	8.00	14R1311	12.75	10.88
HJ16148HLP	16.00	14.00	8.00	14R1513	14.75	12.88
HJ161410HLP	16.00	14.00	10.00	14R1513	14.75	12.88

Alternative inner panel options also available.

Distributed by Gross Automation | +1 (262) 252-1400 | hammondsales@grossautomation.com

Technical references and CAD downloads available at www.hammondmfg.com

All dimensions in inches unless specified otherwise

Quality Products. Service Excellence.
© Hammond Manufacturing
Canada: 519.822.2960 or 905.456.3770 USA: 716.630.7030
Data Subject to change without notice

Type 12 Mild Steel Junction Box *1414 SC Series*

Lift-Off Cover with Screws

Quick Link: hammfg.com/1414SC

Application

- Designed for use as instrument enclosures, electric, hydraulic or pneumatic control housings, electrical junction boxes or terminal wiring enclosures.
- Provides a degree of protection from falling dirt, dust, oil and water.

Standards

- UL 508A Type 12 and 13
- CSA Type 12 and 13
- Complies with
  - NEMA Type 12 and 13
  - IEC 60529, IP54

Construction

- Body formed from 16 gauge or 14 gauge steel. Covers are formed from 14 gauge steel.
- Smooth, continuously welded seams without knockouts, cutouts or holes.
- Welded brackets provide for enclosure mounting.
- Cover is secured with captive, plated steel screws, threaded into sealed wells.
- Oil resistant gaskets are permanently secured.
- Models larger than 4" x 4" include a removable 14 gauge inner panel.
- Internal threaded weld studs are provided for mounting inner panels.
- A bonding stud is provided on the door and a grounding stud is provided on the enclosure.

Finish

- Cover and enclosure are phosphatized and finished in ANSI 61 gray recoatable powder coating.
- Removable inner panel is finished in white powder coating.

Accessories

- Additional Inner Panels...*See Page* ***280***
- Terminal Kit Assemblies...*See Page* ***288***
- Climate Control...*See Page* ***234***
- General Accessories...*See Page* ***268***

	Enclosure			Panel	
Part No.	H	W	D	H	W
1414SCA	4.00	4.00	3.00	no panel	
1414SCC	6.00	4.00	3.00	4.87	2.87
1414SCG	8.00	6.00	3.50	6.75	4.87
1414SCE	6.00	6.00	4.00	4.87	4.87
1414SCI	10.00	8.00	4.00	8.75	6.87
1414SCK	12.00	10.00	5.00	10.75	8.87
1414SCM6	14.00	12.00	6.00	12.75	10.87
1414SCO6	16.00	14.00	6.00	14.75	12.87
1414SCM8	14.00	12.00	8.00	12.75	10.87
1414SCO10	16.00	14.00	10.00	14.75	12.87

© Hammond Manufacturing

Type 12 Mild Steel Junction Box *1436/1438 Series*

Lift-Off Cover with Screws

Quick Link: hammfg.com/1436-8

Application

- Designed for use as instrument enclosures, electrical junction boxes or terminal wiring enclosures.
- Provides a degree of protection from falling dirt, dust, oil and water.

Standards

- UL 508A Type 12 and 13
- CSA Type 12 and 13
- Complies with
  - NEMA Type 12 and 13
  - IEC 60529, IP54

Construction

- Formed from 14 gauge steel.
- Smooth, continuously welded seams without knockouts, cutouts or holes.
- Welded brackets provide for enclosure mounting.
- Lift off cover is secured with captive, plated steel screws, and supported on internal hinges except as noted on charts at bottom and right.
- Cover screws fasten into threaded, sealed wells.
- Oil resistant gaskets are permanently secured.
- A bonding stud is provided on the door and a grounding stud is provided on the enclosure.

Finish

- Cover and enclosure are phosphatized and finished in ANSI 61 gray recoatable powder coating.

Accessories

- General Accessories...*See Page* ***268***

Standard Depth Series (1436)

Part No.	Enclosure H	W	D
1436A [1]	3.50	3.25	2.75
1436B [1]	5.75	3.25	2.75
1436C [1]	8.00	3.25	2.75
1436D [1]	10.25	3.25	2.75
1436F	7.25	6.25	3.00
1436H	9.50	6.25	3.00
1436K	9.50	8.50	3.00
1436O	11.75	8.50	3.00
1436S	11.75	10.75	3.00
1436V	14.00	10.75	3.00

[1] Not hinged

Extra Deep Series (1438)

Part No.	Enclosure H	W	D
1438A [1]	4.00	4.00	4.75
1438B	6.00	4.00	4.75
1438C	8.00	4.00	4.75
1438D	10.00	4.00	4.75
1438F	7.25	6.25	4.75
1438H	9.50	6.25	4.75
1438K	9.50	8.50	4.75
1438O	11.75	8.50	4.75
1438S	11.75	10.75	4.75
1438V	14.00	10.75	4.75

[1] Not hinged

Distributed by Gross Automation | +1 (262) 252-1630 | hammondsales@grossautomation.com

Technical references and CAD downloads available at www.hammondmfg.com

All dimensions in inches unless specified otherwise

Quality Products. Service Excellence.
© Hammond Manufacturing
Canada: 519.822.2960 or 905.456.3770 USA: 716.630.7030
Data Subject to change without notice

Type 12 Mild Steel Wallmount Enclosure *1418J Series*

Continuous Hinge Door with Screws

Quick Link: hammfg.com/1418J

Application

- Designed to house electrical, electronic, hydraulic or pneumatic controls and instruments.
- Provides a degree of protection from falling dirt, dust, oil and water.

Standards

- UL 508A Type 12
- Complies with
  - NEMA Type 12
  - EC 60529, IP54

Construction

- Formed from 14 gauge steel.
- Smooth, continuously welded seams without knockouts, cutouts or holes.
- Door and body stiffeners are provided in the larger enclosures for extra rigidity.
- Welded brackets provide for enclosure mounting.
- Continuously hinged cover is secured with plated screws, threaded into sealed wells.
- Oil resistant gaskets are permanently secured.
- A removable 12 gauge inner panel is included.
- Collar studs are provided for mounting inner panels.
- A bonding stud is provided on the door and a grounding stud is provided on the enclosure.
- A literature pocket is provided for the inside of the door.

Finish

- Cover and enclosure are phosphatized and finished in ANSI 61 gray recoatable powder coating.
- Removable inner panel is finished in white powder coating.

Accessories

- Additional Inner Panels...*See Page* ***281***
- Swing Panel Kit...*See Page* ***288***
- Climate Control...*See Page* ***234***
- General Accessories...*See Page* ***268***

	Enclosure			Panel	
Part No.	H	W	D	H	W
1418JB7	16.00	12.00	7.00	13.00	9.00
1418JC7	20.00	16.00	7.00	17.00	13.00
1418JD7	20.00	20.00	7.00	17.00	17.00
1418JE7	24.00	20.00	7.00	21.00	17.00
1418JJ7	24.00	24.00	7.00	21.00	21.00
1418JF7	30.00	20.00	7.00	27.00	17.00
1418JK7	30.00	24.00	7.00	27.00	21.00
1418JL7	36.00	24.00	7.00	33.00	21.00
1418JC9	20.00	16.00	9.00	17.00	13.00
1418JD9	20.00	20.00	9.00	17.00	17.00
1418JE9	24.00	20.00	9.00	21.00	17.00
1418JJ9	24.00	24.00	9.00	21.00	21.00
1418JK9	30.00	24.00	9.00	27.00	21.00
1418JF9	30.00	20.00	9.00	27.00	17.00
1418JM9	36.00	30.00	9.00	33.00	27.00
1418JL9	36.00	24.00	9.00	33.00	21.00
1418JO9	42.00	30.00	9.00	39.00	27.00
1418JP9	42.00	36.00	9.00	39.00	33.00
1418JJ11	24.00	24.00	11.00	21.00	21.00
1418JL11	36.00	24.00	11.00	33.00	21.00
1418JS11	48.00	36.00	11.00	45.00	33.00
1418JK13	30.00	24.00	13.00	27.00	21.00
1418JM13	36.00	30.00	13.00	33.00	27.00

Distributed by Gross Automation | +1 (262) 252-1600. | hammondsales@grossautomation.com

Technical references and CAD downloads available at www.hammondmfg.com

All dimensions in inches unless specified otherwise

© Hammond Manufacturing

Type 4 Mild Steel Wallmount Enclosure *Eclipse Series*

Hinge Door with Quarter Turn/Handle

Quick Link: hammfg.com/EN4SD

Application

- Designed to enclose electrical and/or electronic equipment and protect against harsh, industrial environments for wallmount applications.
- Impressive styling features like hidden hinges, attractive latching systems make the Eclipse a suitable addition to any high-tech equipment installation.
- A wide range of sizes and practical accessories make this product line a complete package.

Standards

- UL 508A Type 3R, 4, and 12
- CSA Type 3R, 4, and 12
- Complies with
  - NEMA Type 3R, 4, and 12
  - IEC 60529, IP66

Construction

- Formed 14 (24x24" and larger) or 16 (24x20" and smaller) gauge steel.
- Smooth, continuously welded seams ground smooth.
- Door stiffeners are provided where required for increased strength and rigidity - designed to also permit additional mounting options.
- Formed lip on enclosure to exclude flowing liquids and contaminants.
- Door latching: Type A has slotted quarter turns, Type B has handle with 3 point latching, Type C has handle with 3 point latching plus additional quarter turns top and bottom.
- Doors may be easily removed for modifications and are interchangeable.
- Seamless poured-in place gasket.
- Collar studs provided for mounting inner panel.
- Includes hardware kit with panel mounting nuts and sealing washers for wall mounting holes.
- Bonding stud provided on door and grounding stud installed in enclosure.
- Hinges are constructed from 304 stainless steel.
- Hinge pins are stainless steel.
- Quarter turn latch and multi-point handle (key lockable) are zinc diecast with black epoxy finish.
- Door alignment guide provided on 36" wide enclosures.

Finish

- Cover and enclosure are phosphatized and finished with a recoatable powder inside and out with choice of ANSI 61 smooth Gray (GY) or RAL7035 textured light gray (LG).

Accessories

- Additional Inner Panels...*See Page* ***282***
- Swing Panel...*See Page* ***290***
- Swing Frame...*See Page* ***291***
- Eclipse Rack Panel...*See Page* ***291***
- DIN Rail Mounting Kit...*See Page* ***276***
- DIN Rails...*See Page* ***276***
- Door Stop Kit...*See Page* ***304***
- Mounting Foot Kit...*See Page* ***277***
- Rear Hole Plugs...*See Page* ***277***
- Drip Shield Kit...*See Page* ***303***
- Quarter Turn Inserts and Keys...*See Page* ***273***
- Quarter Turn Assemblies...*See Page* ***273***
- Padlock Adaptor...*See Page* ***272***
- Handles...*See Page* ***276***
- Replacement Hinge Pins...*See Page* ***274***
- Window Kits...*See Page* ***294***
- Climate Control...*See Page* ***234***
- Lighting...*See Page* ***298***
- General Accessories...*See Page* ***268***

ANSI 61 Gray	RAL 7035 Light Gray	Enclosure			Latch	Optional Inner Panel		
Part No.	Part No.	H	W	D	Type	Part No.	H	W
EN4SD12106GY	**EN4SD12106LG**	12.00	10.00	6.00	A	**EP1210**	10.20	8.20
EN4SD12126GY	**EN4SD12126LG**	12.00	12.00	6.00	A	**EP1212**	10.20	10.20
EN4SD12246GY	**EN4SD12246LG**	12.00	24.00	6.00	A	**EP1224**	10.20	22.20
EN4SD16126GY	**EN4SD16126LG**	16.00	12.00	6.00	A	**EP1612**	14.20	10.20
EN4SD16166GY	**EN4SD16166LG**	16.00	16.00	6.00	A	**EP1616**	14.20	14.20
EN4SD16206GY	**EN4SD16206LG**	16.00	20.00	6.00	A	**EP1620**	14.20	18.20
EN4SD20126GY	**EN4SD20126LG**	20.00	12.00	6.00	A	**EP2012**	18.20	10.20
EN4SD20166GY	**EN4SD20166LG**	20.00	16.00	6.00	A	**EP2016**	18.20	14.20
EN4SD20206GY	**EN4SD20206LG**	20.00	20.00	6.00	A	**EP2020**	18.20	18.20
EN4SD20246GY	**EN4SD20246LG**	20.00	24.00	6.00	A	**EP2024**	22.20	10.20
EN4SD24126GY	**EN4SD24126LG**	24.00	12.00	6.00	A	**EP2412**	22.20	10.20
EN4SD24166GY	**EN4SD24166LG**	24.00	16.00	6.00	A	**EP2416**	22.20	14.20

Alternative inner panel options also available.

Distributed by Gross Automation | +1 (262) 252-1600. | hammondsales@grossautomation.com

Technical references and CAD downloads available at www.hammondmfg.com

All dimensions in inches unless specified otherwise

Quality Products. Service Excellence.
© Hammond Manufacturing
Canada: 519.822.2960 or 905.456.3770 USA: 716.630.7030
Data Subject to change without notice

Type 4 Mild Steel Wallmount Enclosure *Eclipse Series*

Hinge Door with Quarter Turn/Handle

ANSI 61 Gray	RAL 7035 Light Gray	Enclosure			Latch	Optional Inner Panel		
Part No.	Part No.	H	W	D	Type	Part No.	H	W
EN4SD24206GY	EN4SD24206LG	24.00	20.00	6.00	A	EP2420	22.20	18.20
EN4SD24246GY	EN4SD24246LG	24.00	24.00	6.00	A	EP2424	22.20	22.20
EN4SD30166GY	EN4SD30166LG	30.00	16.00	6.00	A	EP3016	28.20	14.20
EN4SD30206GY	EN4SD30206LG	30.00	20.00	6.00	A	EP3020	28.20	18.20
EN4SD30246GY	EN4SD30246LG	30.00	24.00	6.00	A	EP3024	28.20	22.20
EN4SD36246GY	EN4SD36246LG	36.00	24.00	6.00	A	EP3624	34.20	22.20
EN4SD36306GY	EN4SD36306LG	36.00	30.00	6.00	A	EP3630	34.20	28.20
EN4SD12248GY	EN4SD12248LG	12.00	24.00	8.00	A	EP1224	10.20	22.20
EN4SD16128GY	EN4SD16128LG	16.00	12.00	8.00	A	EP1612	14.20	10.20
EN4SD16168GY	EN4SD16168LG	16.00	16.00	8.00	A	EP1616	14.20	14.20
EN4SD16208GY	EN4SD16208LG	16.00	20.00	8.00	A	EP1620	14.20	18.20
EN4SD20128GY	EN4SD20128LG	20.00	12.00	8.00	A	EP2012	18.20	10.20
EN4SD20168GY	EN4SD20168LG	20.00	16.00	8.00	A	EP2016	18.20	14.20
EN4SD20208GY	EN4SD20208LG	20.00	20.00	8.00	A	EP2020	18.20	18.20
EN4SD20248GY	EN4SD20248LG	20.00	24.00	8.00	A	EP2024	18.20	22.20
EN4SD24128GY	EN4SD24128LG	24.00	12.00	8.00	A	EP2412	22.20	10.20
EN4SD24168GY	EN4SD24168LG	24.00	16.00	8.00	A	EP2416	22.20	14.20
EN4SD24208GY	EN4SD24208LG	24.00	20.00	8.00	A	EP2420	22.20	18.20
EN4SD24248GY	EN4SD24248LG	24.00	24.00	8.00	A	EP2424	22.20	22.20
EN4SD24308GY	EN4SD24308LG	24.00	30.00	8.00	A	EP2430	22.20	28.20
EN4SD30128GY	EN4SD30128LG	30.00	12.00	8.00	A	EP3012	28.20	10.20
EN4SD30168GY	EN4SD30168LG	30.00	16.00	8.00	A	EP3016	28.20	14.20
EN4SD30208GY	EN4SD30208LG	30.00	20.00	8.00	A	EP3020	28.20	18.20
EN4SD30248GY	EN4SD30248LG	30.00	24.00	8.00	A	EP3024	28.20	22.20
EN4SD30308GY	EN4SD30308LG	30.00	30.00	8.00	A	EP3030	28.20	28.20
EN4SD30368GY	EN4SD30368LG	30.00	36.00	8.00	A	EP3036	28.20	34.20
EN4SD36248GY	EN4SD36248LG	36.00	24.00	8.00	A	EP3624	34.20	22.20
EN4SD36308GY	EN4SD36308LG	36.00	30.00	8.00	A	EP3630	34.20	28.20
EN4SD36368GY	EN4SD36368LG	36.00	36.00	8.00	A	EP3636	34.20	34.20
EN4SD42248GY	EN4SD42248LG	42.00	24.00	8.00	B	EP4224	40.20	22.20
EN4SD42308GY	EN4SD42308LG	42.00	30.00	8.00	B	EP4230	40.20	28.20
EN4SD42368GY	EN4SD42368LG	42.00	36.00	8.00	B	EP4236	40.20	34.20
EN4SD48248GY	EN4SD48248LG	48.00	24.00	8.00	B	EP4824	46.20	22.20
EN4SD48308GY	EN4SD48308LG	48.00	30.00	8.00	B	EP4830	46.20	28.20
EN4SD48368GY	EN4SD48368LG	48.00	36.00	8.00	B	EP4836	46.20	34.20
EN4SD60368GY	EN4SD60368LG	60.00	36.00	8.00	B	EP6036	58.20	34.20
EN4SD161210GY	EN4SD161210LG	16.00	12.00	10.00	A	EP1612	14.20	10.20
EN4SD161610GY	EN4SD161610LG	16.00	16.00	10.00	A	EP1616	14.20	14.20
EN4SD162010GY	EN4SD162010LG	16.00	20.00	10.00	A	EP1620	14.20	18.20
EN4SD201610GY	EN4SD201610LG	20.00	16.00	10.00	A	EP2016	18.20	14.20
EN4SD202010GY	EN4SD202010LG	20.00	20.00	10.00	A	EP2020	18.20	18.20
EN4SD202410GY	EN4SD202410LG	20.00	24.00	10.00	A	EP2024	18.20	22.20
EN4SD241210GY	EN4SD241210LG	24.00	12.00	10.00	A	EP2412	22.20	10.20
EN4SD241610GY	EN4SD241610LG	24.00	16.00	10.00	A	EP2416	22.20	14.20
EN4SD242010GY	EN4SD242010LG	24.00	20.00	10.00	A	EP2420	22.20	18.20
EN4SD242410GY	EN4SD242410LG	24.00	24.00	10.00	A	EP2424	22.20	22.20
EN4SD243010GY	EN4SD243010LG	24.00	30.00	10.00	A	EP2430	22.20	28.20
EN4SD302010GY	EN4SD302010LG	30.00	20.00	10.00	A	EP3020	28.20	18.20
EN4SD302410GY	EN4SD302410LG	30.00	24.00	10.00	A	EP3024	28.20	22.20

Alternative inner panel options also available.

Distributed by Gross Automation | +1 (262) 252-1600. | hammondsales@grossautomation.com

Technical references and CAD downloads available at www.hammondmfg.com

All dimensions in inches unless specified otherwise

© Hammond Manufacturing

Canada: 519.822.2960 or 905.456.3770 USA: 716.630.7030

Data Subject to change without notice

Type 4 Mild Steel Wallmount Enclosure *Eclipse Series*

Hinge Door with Quarter Turn/Handle

ANSI 61 Gray	RAL 7035 Light Gray	Enclosure			Latch	Optional Inner Panel		
Part No.	Part No.	H	W	D	Type	Part No.	H	W
EN4SD303010GY	EN4SD303010LG	30.00	30.00	10.00	A	EP3030	28.20	28.20
EN4SD362410GY	EN4SD362410LG	36.00	24.00	10.00	A	EP3624	34.20	22.20
EN4SD363010GY	EN4SD363010LG	36.00	30.00	10.00	A	EP3630	34.20	28.20
EN4SD363610GY	EN4SD363610LG	36.00	36.00	10.00	A	EP3636	34.20	34.20
EN4SD422410GY	EN4SD422410LG	42.00	24.00	10.00	B	EP4224	40.20	22.20
EN4SD423010GY	EN4SD423010LG	42.00	30.00	10.00	B	EP4230	40.20	28.20
EN4SD423610GY	EN4SD423610LG	42.00	36.00	10.00	B	EP4236	40.20	34.20
EN4SD482410GY	EN4SD482410LG	48.00	24.00	10.00	B	EP4824	46.20	22.20
EN4SD483010GY	EN4SD483010LG	48.00	30.00	10.00	B	EP4830	46.20	28.20
EN4SD483610GY	EN4SD483610LG	48.00	36.00	10.00	B	EP4836	46.20	34.20
EN4SD603610GY	EN4SD603610LG	60.00	36.00	10.00	B	EP6036	58.20	34.20
EN4SD201612GY	EN4SD201612LG	20.00	16.00	12.00	A	EP2016	18.20	14.20
EN4SD202012GY	EN4SD202012LG	20.00	20.00	12.00	A	EP2020	18.20	18.20
EN4SD242012GY	EN4SD242012LG	24.00	20.00	12.00	A	EP2420	22.20	18.20
EN4SD242412GY	EN4SD242412LG	24.00	24.00	12.00	A	EP2424	22.20	22.20
EN4SD243012GY	EN4SD243012LG	24.00	30.00	12.00	A	EP2430	22.20	28.20
EN4SD302412GY	EN4SD302412LG	30.00	24.00	12.00	A	EP3024	28.20	22.20
EN4SD303012GY	EN4SD303012LG	30.00	30.00	12.00	A	EP3030	28.20	28.20
EN4SD362412GY	EN4SD362412LG	36.00	24.00	12.00	A	EP3624	34.20	22.20
EN4SD363012GY	EN4SD363012LG	36.00	30.00	12.00	A	EP3630	34.20	28.20
EN4SD363612GY	EN4SD363612LG	36.00	36.00	12.00	A	EP3636	34.20	34.20
EN4SD423012GY	EN4SD423012LG	42.00	30.00	12.00	B	EP4230	40.20	28.20
EN4SD423612GY	EN4SD423612LG	42.00	36.00	12.00	B	EP4236	40.20	34.20
EN4SD482412GY	EN4SD482412LG	48.00	24.00	12.00	B	EP4824	46.20	22.20
EN4SD483612GY	EN4SD483612LG	48.00	36.00	12.00	B	EP4836	46.20	34.20
EN4SD603612GY	EN4SD603612LG	60.00	36.00	12.00	B	EP6036	58.20	34.20
EN4SD723012GY	EN4SD723012LG	72.00	30.00	12.00	C	EP7230	70.20	28.20
EN4SD723612GY	EN4SD723612LG	72.00	36.00	12.00	C	EP7236	70.20	34.20
EN4SD242016GY	EN4SD242016LG	24.00	20.00	16.00	A	EP2420	22.20	18.20
EN4SD242416GY	EN4SD242416LG	24.00	24.00	16.00	A	EP2424	22.20	22.20
EN4SD302416GY	EN4SD302416LG	30.00	24.00	16.00	A	EP3024	28.20	22.20
EN4SD362416GY	EN4SD362416LG	36.00	24.00	16.00	A	EP3624	34.20	22.20
EN4SD363016GY	EN4SD363016LG	36.00	30.00	16.00	A	EP3630	34.20	28.20
EN4SD363616GY	EN4SD363616LG	36.00	36.00	16.00	A	EP3636	34.20	34.20
EN4SD423016GY	EN4SD423016LG	42.00	30.00	16.00	B	EP4230	40.20	28.20
EN4SD423616GY	EN4SD423616LG	42.00	36.00	16.00	B	EP4236	40.20	34.20
EN4SD483016GY	EN4SD483016LG	48.00	30.00	16.00	B	EP4830	46.20	28.20
EN4SD483616GY	EN4SD483616LG	48.00	36.00	16.00	B	EP4836	46.20	34.20
EN4SD603616GY	EN4SD603616LG	60.00	36.00	16.00	B	EP6036	58.20	34.20
EN4SD723016GY	EN4SD723016LG	72.00	30.00	16.00	C	EP7230	70.20	28.20
EN4SD723616GY	EN4SD723616LG	72.00	36.00	16.00	C	EP7236	70.20	34.20
EN4SD242420GY	EN4SD242420LG	24.00	24.00	20.00	A	EP2424	22.20	22.20
EN4SD302420GY	EN4SD302420LG	30.00	24.00	20.00	A	EP3024	28.20	22.20
EN4SD363020GY	EN4SD363020LG	36.00	30.00	20.00	A	EP3630	34.20	28.20
EN4SD483620GY	EN4SD483620LG	48.00	36.00	20.00	B	EP4836	46.20	34.20
EN4SD603620GY	EN4SD603620LG	60.00	36.00	20.00	B	EP6036	58.20	34.20
EN4SD723020GY	EN4SD723020LG	72.00	30.00	20.00	C	EP7230	70.20	28.20
EN4SD302424GY	EN4SD302424LG	30.00	24.00	24.00	A	EP3024	28.20	22.20
EN4SD723024GY	EN4SD723024LG	72.00	30.00	24.00	C	EP7230	70.20	28.20

Alternative inner panel options also available.

Distributed by Gross Automation | +1 (262) 252-1600. | hammondsales@grossautomation.com

Technical references and CAD downloads available at www.hammondmfg.com

All dimensions in inches unless specified otherwise

© Hammond Manufacturing

Type 12 Mild Steel Two Door Wallmount Enclosure *Eclipse Series*

Hinge Door with Handle

Quick Link: hammfg.com/EN4TD

Application

- Designed to enclose electrical and/or electronic equipment and protect against harsh, industrial environments for wallmount applications.
- Impressive styling features like hidden hinges, attractive latching systems make the Eclipse a suitable addition to any high-tech equipment installation.
- A wide range of sizes and practical accessories make this product line a complete package.

Standards

- UL 508A Type 12, 3R unless marked[1]
- CSA Type 12, 3R
- Complies with
  - NEMA 12, 3R
  - IEC 60529, IP54

Construction

- Formed 14 gauge steel.
- Smooth, continuously welded seams ground smooth.
- Door stiffeners are provided for increased strength and rigidity also designed to permit additional mounting options.
- Formed lip on enclosure to exclude flowing liquids and contaminants.
- Doors may be easily removed for modifications and are interchangeable.
- Oil resistant gaskets are permanently secured.
- Collar studs provided for mounting inner panel.
- Includes hardware kit with panel mounting nuts and sealing washers for wall mounting holes.
- Bonding stud provided on door and grounding stud installed in enclosure.
- Doors are secured with a three point key lockable handle.
- Hinges are constructed from 304 stainless steel.
- Key lockable handle is zinc diecast with black epoxy finish.
- Hinge pins are stainless steel.
- Door alignment guides provided on all doors.

Finish

- Cover and enclosure are phosphatized and finished with a recoatable powder inside and out with choice of ANSI 61 smooth Gray (GY) or RAL7035 textured light gray (LG).

Accessories

- Additional Inner Panels...*See Page* **282**
- DIN Rail Mounting Kit...*See Page* **276**
- DIN Rails...*See Page* **276**
- Door Stop Kit...*See Page* **304**
- Mounting Foot Kit...*See Page* **277**
- Rear Hole Plugs...*See Page* **277**
- Drip Shield Kit...*See Page* **303**
- Handles...*See Page* **276**
- Replacement Hinge Pins...*See Page* **274**
- Window Kits...*See Page* **294**
- Climate Control...*See Page* **234**
- Lighting...*See Page* **298**
- General Accessories...*See Page* **268**

ANSI 61 Gray	RAL7035 Light Gray	Overall Dimensions			Optional Inner. Panel		
Part No.	Part No.	H	W	D	Part No.	H	W
EN4TD24428GY	**EN4TD24428LG**	24.00	42.00	8.00	**EP2442**	22.20	40.20
EN4TD24488GY	**EN4TD24488LG**	24.00	48.00	8.00	**EP2448**	22.20	46.20
EN4TD30488GY	**EN4TD30488LG**	30.00	48.00	8.00	**EP3048**	28.20	46.20
EN4TD244210GY	**EN4TD244210LG**	24.00	42.00	10.00	**EP2442**	22.20	40.20
EN4TD304210GY	**EN4TD304210LG**	30.00	42.00	10.00	**EP3042**	28.20	40.20
EN4TD304810GY	**EN4TD304810LG**	30.00	48.00	10.00	**EP3048**	28.20	46.20
EN4TD306010GY	**EN4TD306010LG**	30.00	60.00	10.00	**EP3060**	28.20	58.20
EN4TD306012GY	**EN4TD306012LG**	30.00	60.00	12.00	**EP3060**	28.20	58.20
EN4TD364212GY	**EN4TD364212LG**	36.00	42.00	12.00	**EP3642**	34.20	42.20
EN4TD364812GY	**EN4TD364812LG**	36.00	48.00	12.00	**EP3648**	34.20	46.20
EN4TD366012GY	**EN4TD366012LG**	36.00	60.00	12.00	**EP3660**	34.20	58.20
EN4TD484812GY [1]	**EN4TD484812LG** [1]	48.00	48.00	12.00	**EP4848**	46.20	46.20

[1] Approved to CSA/CSAus Type 12, 3R only. Alternative inner panel options also available.

Distributed by: Grossa Automation | +1 (212) 252-0570 | hammondsales@grossautomation.com

Technical references and CAD downloads available at www.hammondmfg.com

All dimensions in inches unless specified otherwise

© Hammond Manufacturing

Type 4 Mild Steel Wallmount Enclosure w/ Window *Eclipse Series*

Hinge Door with Quarter Turn

Quick Link: hammfg.com/EN4SDW

Application

- Designed to enclose electrical and/or electronic equipment in wallmount applications where viewing of component operation is necessary while maintaining protection ratings.
- Impressive styling features like hidden hinges, attractive latching systems make the Eclipse a suitable addition to any high-tech equipment installation.
- A wide range of sizes and practical accessories make this product line a complete package.

Standards

- UL 508A Type 3R, 4 and 12
- CSA Type 3R, 4 and 12
- Complies with
  - NEMA 3R, 4 and 12
  - IEC 60529, IP66

Construction

- Formed 14 (24x24" and larger) or 16 (24x20" and smaller) gauge steel.
- Full view UV resistant polycarbonate window allow maximum viewing area of inner panel.
- Smooth, continuously welded seams ground smooth.
- Door stiffeners are provided where required for increased strength and rigidity - designed to also permit additional mounting options.
- Formed lip on enclosure to exclude flowing liquids and contaminants.
- Door latches feature the added safety of quarter turn slot requiring use of tool for opening.
- Doors may be easily removed for modifications and are interchangeable.
- Seamless poured-in place gasket.
- Collar studs provided for mounting inner panel.
- Includes hardware kit with panel mounting nuts and sealing washers for wall mounting holes.
- Bonding stud provided on door and grounding stud installed in enclosure.
- Hinges are constructed from 304 stainless steel.
- Hinge pins are stainless steel.
- Quarter turn latches are zinc diecast with black epoxy finish.

Finish

- Cover and enclosure are phosphatized and finished with a recoatable powder inside and out with choice of ANSI 61 smooth Gray (GY) or RAL7035 textured light gray (LG).

Accessories

- Additional Inner Panels...*See Page* ***282***
- Swing Panel...*See Page* ***290***
- Swing Frame...*See Page* ***291***
- Eclipse Rack Panel...*See Page* ***291***
- DIN Rail Mounting Kit...*See Page* ***276***
- DIN Rails...*See Page* ***276***
- Door Stop Kit...*See Page* ***304***
- Mounting Foot Kit...*See Page* ***277***
- Rear Hole Plugs...*See Page* ***277***
- Drip Shield Kit...*See Page* ***303***
- Quarter Turn Assemblies...*See Page* ***273***
- Quarter Turn Inserts and Keys...*See Page* ***273***
- Padlock Adaptor...*See Page* ***272***
- Handles...*See Page* ***276***
- Replacement Hinge Pins...*See Page* ***274***
- Window Kits...*See Page* ***294***
- Climate Control...*See Page* ***234***
- Lighting...*See Page* ***298***
- General Accessories...*See Page* ***268***

Distributed by Gross Automation | +1 (262) 252-1600. | hammondsales@grossautomation.com

Technical references and CAD downloads available at www.hammondmfg.com

All dimensions in inches unless specified otherwise

Quality Products. Service Excellence.

© Hammond Manufacturing

Canada: 519.822.2960 or 905.456.3770 USA: 716.630.7030

Data Subject to change without notice

Type 4 Mild Steel Wallmount Enclosure w/ Window *Eclipse Series*

Hinge Door with Quarter Turn

ANSI 61 Gray	RAL7035 Light Gray	Enclosure			Optional Inner Panel		
Part No.	Part No.	H	W	D	Part No.	H	W
EN4SD16126WGY	**EN4SD16126WLG**	16.00	12.00	6.00	**EP1612**	14.20	10.20
EN4SD20166WGY	**EN4SD20166WLG**	20.00	16.00	6.00	**EP2016**	18.20	14.20
EN4SD20206WGY	**EN4SD20206WLG**	20.00	20.00	6.00	**EP2020**	18.20	18.20
EN4SD24206WGY	**EN4SD24206WLG**	24.00	20.00	6.00	**EP2420**	22.20	18.20
EN4SD24246WGY	**EN4SD24246WLG**	24.00	24.00	6.00	**EP2424**	22.20	22.20
EN4SD16128WGY	**EN4SD16128WLG**	16.00	12.00	8.00	**EP1612**	14.20	10.20
EN4SD20168WGY	**EN4SD20168WLG**	20.00	16.00	8.00	**EP2016**	18.20	14.20
EN4SD20208WGY	**EN4SD20208WLG**	20.00	20.00	8.00	**EP2020**	18.20	18.20
EN4SD24208WGY	**EN4SD24208WLG**	24.00	20.00	8.00	**EP2420**	22.20	18.20
EN4SD24248WGY	**EN4SD24248WLG**	24.00	24.00	8.00	**EP2424**	22.20	22.20
EN4SD30248WGY	**EN4SD30248WLG**	30.00	24.00	8.00	**EP3024**	28.20	22.20
EN4SD202012WGY	**EN4SD202012WLG**	20.00	20.00	12.00	**EP2020**	18.20	18.20
EN4SD242012WGY	**EN4SD242012WLG**	24.00	20.00	12.00	**EP2420**	22.20	18.20
EN4SD242412WGY	**EN4SD242412WLG**	24.00	24.00	12.00	**EP2424**	22.20	22.20
EN4SD302412WGY	**EN4SD302412WLG**	30.00	24.00	12.00	**EP3024**	28.20	22.20
EN4SD242416WGY	**EN4SD242416WLG**	24.00	24.00	16.00	**EP2424**	22.20	22.20
EN4SD242420WGY	**EN4SD242420WLG**	24.00	24.00	20.00	**EP2424**	22.20	22.20
EN4SD302420WGY	**EN4SD302420WLG**	30.00	24.00	20.00	**EP3024**	28.20	22.20

[1] All Window Door latch types are quarter turns. Alternative inner panel options also available.

© Hammond Manufacturing

NEMA Rated Swing-Out Wall Mount Cabinet *EN4DH Series*

Up to 180 lbs Weight Capacity

Quick Link: hammfg.com/EN4DH

Application

- Designed for network access equipment using 19" mounting rails.
- Dual access both front and rear of the equipment allows easy install and connection between equipment and to main cable route.
- Provides outstanding protection against dust, oil and water with solid and plexi door version in NEMA type 4.

Standards

- Solid Door
  - UL 508A Type 1, 3, 3R, 4, 12
  - CSA Type 1, 3, 3R, 4, 12
- Plexi Viewing
  - UL 508A 1, 3, 3R, 4, 12
  - CSA Type 1, 3, 3R, 4, 12
- Complies with
  - NEMA type 3R,4 and 12
  - IEC 60529 , IP54, IP66

Features

- Dual access via double hinge design opens 120 degrees for access to front and rear of equipment
- Heavy wall mounting base for cable entry with collar stud provision for optional inner panel.
- Wall base can be mounted with optional external mounting feet
- Interior latch releases center section for added security, no tools required
- Solid and Window door are provided with combination key & padlock handle (2 or 4 point).
- Large window door view area
- 1 Pair of adjustable drilled and tapped L rails with cable pass through included
- Bonding studs provided on door, body and wall base

Construction

- Wall base, body and doors made form 14 guage steel
- Smooth continuous welded seams without knockouts, cutouts or holes
- Seamless poured-in place gasket for added protection in both indoor and outdoor locations
- Window door constructed with UV resistant polycarbonate material
- Plated L rails drilled and tapped 10/32 to EIA 19" standards
- Mounting hardware pack 25 for 19" rails

Finish

- RAL7035 light Gray
- TAA Compliant.
- RoHS Compliant.
- Manufactured in North America.

Accessories

- Filtered Fans...*See Page* ***242***
- Mounting Foot Kit...*See Page* ***277***
- Climate Control...*See Page* ***234***

Distributed by Gross Automation | +1 (262) 252-1600. | hammondsales@grossautomation.com

Technical references and CAD downloads available at www.hammondmfg.com

All dimensions in inches unless specified otherwise

© Hammond Manufacturing

NEMA Rated Swing-Out Wall Mount Cabinet *EN4DH Series*

Up to 180 lbs Weight Capacity

Solid Door	Window Door	Overall Dimensions			Rack	Mounting Dimensions			Suggested
Part No.	Part No.	Height	Width	Depth	Units	Height	Width	Center Depth	Load Capacity
EN4DH162415LG	EN4DH162415WLG	16.00	24.00	15.01	7U	12.25	19.00	9.51	100 lb
EN4DH162424LG	EN4DH162424WLG	16.00	24.00	24.00	7U	12.25	19.00	18.50	100 lb
EN4DH202424LG	EN4DH202424WLG	20.00	24.00	24.00	10U	17.50	19.00	18.50	100 lb
EN4DH242415LG	EN4DH242415WLG	24.00	24.00	15.01	12U	21.00	19.00	9.51	120 lb
EN4DH242424LG	EN4DH242424WLG	24.00	24.00	24.00	12U	21.00	19.00	18.50	120 lb
EN4DH362424LG	EN4DH362424WLG	36.00	24.00	24.00	19U	33.25	19.00	18.50	140 lb
EN4DH482424LG	EN4DH482424WLG	48.00	24.00	24.00	26U	45.50	19.00	18.50	180 lb

Optional Rear Inner Panel

	Overall Dimensions	
Part No.	H	W
EPGDH1624	12.20	20.20
EPGDH2024	16.20	20.20
EPGDH2424	20.20	20.20
EPGDH3624	32.20	20.20
EPGDH4824	44.20	20.20

Optional Additional Pair of Panel Rails

Part No.	Rack Units
EPDHR7	7
EPDHR10	10
EPDHR12	12
EPDHR19	19
EPDHR26	26

© Hammond Manufacturing

Type 4 Mild Steel Wallmount Enclosure w/ Sloped Top *ST Series*

Hinge Door with Quarter Turn

Quick Link: hammfg.com/EN4SDST

Application

- Designed to enclose electrical and/or electronic equipment and protect against harsh, industrial environments for wallmount applications.
- Sloped top prevents water from resting on top as well as providing potential for controls mounting.
- Impressive styling features like hidden hinges and attractive latching systems make the Eclipse a suitable addition to any high-tech equipment installation.
- A wide range of sizes and practical accessories make this product line a complete package.

Standards

- UL 508A Type 3R, 4 and 12
- CSA Type 3R, 4 and 12
- Complies with
  - NEMA 3R, 4 and 12
  - IEC 60529, IP66

Construction

- Formed 14 (24x24" and larger) or 16 (24x20" and smaller) gauge steel.
- Continuously welded seams ground smooth.
- Door stiffeners are provided where required for increased strength and rigidity - designed to also permit additional mounting options.
- Formed lip on enclosure to exclude flowing liquids and contaminants.
- Door latching: Type A has slotted quarter turns, Type B has handle with 3 point latching
- Doors may be easily removed for modifications and are interchangeable.
- Seamless poured-in place gasket.
- Collar studs provided for mounting inner panel.
- Includes hardware kit with panel mounting nuts and sealing washers for wall mounting holes.
- Bonding stud provided on door and grounding stud installed in enclosure.
- Hinges are finished in mild steel.
- Stainless steel hinge pins and quarter turns.

Finish

- Cover and enclosure are finished in recoatable RAL 7035 light gray textured powder coating.

Accessories

- Additional Inner Panels...*See Page* ***282***
- Swing Panel...*See Page* ***290***
- Swing Frame...*See Page* ***291***
- DIN Rail Mounting Kit...*See Page* ***276***
- DIN Rails...*See Page* ***276***
- Door Stop Kit...*See Page* ***304***
- Mounting Foot Kit...*See Page* ***277***
- Rear Hole Plugs...*See Page* ***277***
- Drip Shield Kit...*See Page* ***303***
- Quarter Turn Assemblies...*See Page* ***273***
- Quarter Turn Inserts and Keys...*See Page* ***273***
- Padlock Adaptor...*See Page* ***272***
- Handles...*See Page* ***276***
- Replacement Hinge Pins...*See Page* ***274***
- Window Kits...*See Page* ***294***
- Climate Control...*See Page* ***234***
- Lighting...*See Page* ***298***
- General Accessories...*See Page* ***268***

Distributed by Gross Automation | +1 (262) 252-1600. | hammondsales@grossautomation.com

Technical references and CAD downloads available at www.hammondmfg.com

All dimensions in inches unless specified otherwise

Quality Products. Service Excellence.
© Hammond Manufacturing
Canada: 519.822.2960 or 905.456.3770 USA: 716.630.7030
Data Subject to change without notice

Type 4 Mild Steel Wallmount Enclosure w/ Sloped Top *ST Series*

Hinge Door with Quarter Turn

	Enclosure					Optional Inner Panel		
Part No.	H1	H2	W	D	Latch Type	Part No.	H	W
ST12126LG	12.00	14.20	12.00	6.00	A	**EP1212**	10.20	10.20
ST16126LG	16.00	18.20	12.00	6.00	A	**EP1612**	14.20	10.20
ST20166LG	20.00	22.20	16.00	6.00	A	**EP2016**	18.20	14.20
ST20206LG	20.00	22.20	20.00	6.00	A	**EP2020**	18.20	18.20
ST16168LG	16.00	18.90	16.00	8.00	A	**EP1616**	14.20	14.20
ST20168LG	20.00	22.90	16.00	8.00	A	**EP2016**	18.20	14.20
ST20208LG	20.00	22.90	20.00	8.00	A	**EP2020**	18.20	18.20
ST24208LG	24.00	26.90	20.00	8.00	A	**EP2420**	22.20	18.20
ST24248LG	24.00	26.90	24.00	8.00	A	**EP2424**	22.20	22.20
ST30248LG	30.00	32.90	24.00	8.00	A	**EP3024**	28.20	22.20
ST30308LG	30.00	32.90	30.00	8.00	A	**EP3030**	28.20	28.20
ST36308LG	36.00	38.90	30.00	8.00	A	**EP3630**	34.20	28.20
ST242410LG	24.00	27.60	24.00	10.00	A	**EP2424**	22.20	22.20
ST302410LG	30.00	33.60	24.00	10.00	A	**EP3024**	28.20	22.20
ST363010LG	36.00	39.60	30.00	10.00	A	**EP3630**	34.20	28.20
ST483610LG	48.00	51.60	36.00	10.00	B	**EP4836**	46.20	34.20
ST242412LG	24.00	28.40	24.00	12.00	A	**EP2424**	22.20	22.20
ST302412LG	30.00	34.40	24.00	12.00	A	**EP3024**	28.20	22.20
ST363012LG	36.00	40.30	30.00	12.00	A	**EP3630**	34.20	28.20
ST363612LG	36.00	40.30	36.00	12.00	A	**EP3636**	34.20	34.20
ST483612LG	48.00	52.30	36.00	12.00	B	**EP4836**	46.20	34.20
ST603612LG	60.00	64.30	36.00	12.00	B	**EP6036**	58.20	34.20
ST363016LG	36.00	41.80	30.00	16.00	A	**EP3630**	34.20	28.20
ST483616LG	48.00	53.80	36.00	16.00	B	**EP4836**	46.20	34.20
ST302420LG	30.00	37.30	24.00	20.00	A	**EP3024**	28.20	22.20

Alternative inner panel options also available.

Distributed by Gross Automation | +1 (262) 252-1600. | hammondsales@grossautomation.com

Technical references and CAD downloads available at www.hammondmfg.com

All dimensions in inches unless specified otherwise

© Hammond Manufacturing

Type 12 Mild Steel Wallmount Enclosure *1418 Series*

Continuous Hinge Door with Clamps

Quick Link: hammfg.com/1418

Application

- Designed to house electrical, electronic, hydraulic or pneumatic controls and instruments.
- Provides a degree of protection from falling dirt, dust, oil and water.

Standards

- UL 508A Type 12 and 13
- CSA Type 12 and 13
- Complies with
  - NEMA Type 12 and 13
  - IEC 60529, IP54

Construction

- Formed 14 gauge steel bodies and doors.
- Smooth, continuously welded seams without knockouts, cutouts or holes.
- Door and body stiffeners are provided in the larger enclosures for extra rigidity. Welded brackets provide for enclosure mounting.
- Formed lip on door and enclosure exclude flowing liquids and contaminants.
- Continuously hinged door may be removed by pulling the hinge pin.
- Door is secured with easily operated stainless steel clamps.
- Provision for padlocking.
- Oil resistant gaskets are permanently secured.
- A removable 12 gauge inner panel is included.
- Collar studs are provided for mounting inner panels.
- A bonding stud is provided on the door and a grounding stud is provided in the enclosure.
- A literature pocket is provided for the inside of the door.

Finish

- Cover and enclosure are finished in recoatable smooth ANSI 61 gray powder coating on the inside and outside.
- Removable inner panel is finished in white powder coating.

Accessories

- Additional Inner Panels...*See Page* ***281***
- Perforated Inner Panels...*See Page* ***285***
- Swing Panel Kit...*See Page* ***288***
- Door Stop Kit...*See Page* ***304***
- Door Clamping Hardware...*See Page* ***268***
- Wallmount Quick Release Clamp...*See Page* ***269***
- Lock kit...*See Page* ***271***
- Floor Stand Kit...*See Page* ***304***
- Enclosure Stabilizers...*See Page* ***305***
- Window Kits...*See Page* ***294***
- Climate Control...*See Page* ***234***
- Lighting...*See Page* ***298***
- General Accessories...*See Page* ***268***

© Hammond Manufacturing

Type 12 Mild Steel Wallmount Enclosure *1418 Series*

Continuous Hinge Door with Clamps

Part No.	Enclosure H	Enclosure W	Enclosure D	Panel H	Panel W
1418A6	12.00	24.00	6.00	9.00	21.00
1418B6	16.00	12.00	6.00	13.00	9.00
1418G6	16.00	16.00	6.00	13.00	13.00
1418CR6	16.00	20.00	6.00	13.00	17.00
1418CA6	20.00	12.00	6.00	17.00	9.00
1418C6	20.00	16.00	6.00	17.00	13.00
1418D6	20.00	20.00	6.00	17.00	17.00
1418ER6	20.00	24.00	6.00	17.00	21.00
1418AR6	24.00	12.00	6.00	21.00	9.00
1418H6	24.00	16.00	6.00	21.00	13.00
1418E6	24.00	20.00	6.00	21.00	17.00
1418J6	24.00	24.00	6.00	21.00	21.00
1418FG6	30.00	16.00	6.00	27.00	13.00
1418F6	30.00	20.00	6.00	27.00	17.00
1418K6	30.00	24.00	6.00	27.00	21.00
1418L6	36.00	24.00	6.00	33.00	21.00
1418M6	36.00	30.00	6.00	33.00	27.00
1418A8	12.00	24.00	8.00	9.00	21.00
1418B8	16.00	12.00	8.00	13.00	9.00
1418G8	16.00	16.00	8.00	13.00	13.00
1418CR8	16.00	20.00	8.00	13.00	17.00
1418CA8	20.00	12.00	8.00	17.00	9.00
1418C8	20.00	16.00	8.00	17.00	13.00
1418D8	20.00	20.00	8.00	17.00	17.00
1418ER8	20.00	24.00	8.00	17.00	21.00
1418AR8	24.00	12.00	8.00	21.00	9.00
1418H8	24.00	16.00	8.00	21.00	13.00
1418E8	24.00	20.00	8.00	21.00	17.00
1418J8	24.00	24.00	8.00	21.00	21.00
1418KR8	24.00	30.00	8.00	21.00	27.00
1418KA8	30.00	12.00	8.00	27.00	9.00
1418KG8	30.00	16.00	8.00	27.00	13.00
1418F8	30.00	20.00	8.00	27.00	17.00
1418K8	30.00	24.00	8.00	27.00	21.00
1418KK8	30.00	30.00	8.00	27.00	27.00
1418MR8	30.00	36.00	8.00	27.00	33.00
1418L8	36.00	24.00	8.00	33.00	21.00
1418M8	36.00	30.00	8.00	33.00	27.00
1418LL8	36.00	36.00	8.00	33.00	33.00
1418N8	42.00	24.00	8.00	39.00	21.00
1418O8	42.00	30.00	8.00	39.00	27.00
1418P8	42.00	36.00	8.00	39.00	33.00
1418Q8	48.00	24.00	8.00	45.00	21.00
1418R8	48.00	30.00	8.00	45.00	27.00
1418S8	48.00	36.00	8.00	45.00	33.00
1418T8	60.00	36.00	8.00	57.00	33.00
1418B10	16.00	12.00	10.00	13.00	9.00
1418C10	20.00	16.00	10.00	17.00	13.00
1418D10	20.00	20.00	10.00	17.00	17.00
1418AR10	24.00	12.00	10.00	21.00	9.00
1418E10	24.00	20.00	10.00	21.00	17.00
1418J10	24.00	24.00	10.00	21.00	21.00
1418F10	30.00	20.00	10.00	27.00	17.00
1418K10	30.00	24.00	10.00	27.00	21.00
1418L10	36.00	24.00	10.00	33.00	21.00
1418M10	36.00	30.00	10.00	33.00	27.00
1418O10	42.00	30.00	10.00	39.00	27.00
1418P10	42.00	36.00	10.00	39.00	33.00
1418R10	48.00	30.00	10.00	45.00	27.00
1418S10	48.00	36.00	10.00	45.00	33.00
1418T10	60.00	36.00	10.00	57.00	33.00
1418C12	20.00	16.00	12.00	17.00	13.00
1418E12	24.00	20.00	12.00	21.00	17.00
1418J12	24.00	24.00	12.00	21.00	21.00
1418K12	30.00	24.00	12.00	27.00	21.00
1418KK12	30.00	30.00	12.00	27.00	27.00
1418L12	36.00	24.00	12.00	33.00	21.00
1418M12	36.00	30.00	12.00	33.00	27.00
1418LL12	36.00	36.00	12.00	33.00	33.00
1418O12	42.00	30.00	12.00	39.00	27.00
1418P12	42.00	36.00	12.00	39.00	33.00
1418S12	48.00	36.00	12.00	45.00	33.00
1418T12	60.00	36.00	12.00	57.00	33.00
1418U12	72.00	30.00	12.00	69.00	27.00
1418V12	72.00	36.00	12.00	69.00	33.00
1418E16	24.00	20.00	16.00	21.00	17.00
1418J16	24.00	24.00	16.00	21.00	21.00
1418K16	30.00	24.00	16.00	27.00	21.00
1418M16	36.00	30.00	16.00	33.00	27.00
1418P16	42.00	36.00	16.00	39.00	33.00
1418S16	48.00	36.00	16.00	45.00	33.00
1418T16	60.00	36.00	16.00	57.00	33.00
1418U16	72.00	30.00	16.00	69.00	27.00
1418K20	30.00	24.00	20.00	27.00	21.00
1418M20	36.00	30.00	20.00	33.00	27.00
1418S20	48.00	36.00	20.00	45.00	33.00
1418T20	60.00	36.00	20.00	57.00	33.00
1418U20	72.00	30.00	20.00	69.00	27.00
1418K24	30.00	24.00	24.00	27.00	21.00
1418U24	72.00	30.00	24.00	69.00	27.00

Distributed by Gross Automation | +1 (262) 252-1600. | hammondsales@grossautomation.com

Technical references and CAD downloads available at www.hammondmfg.com

All dimensions in inches unless specified otherwise

© Hammond Manufacturing

Canada: 519.822.2960 or 905.456.3770 USA: 716.630.7030

Data Subject to change without notice

Type 4 Mild Steel Wallmount Enclosure *1418 N4 Series*

Continuous Hinge Door with Clamps

Quick Link: hammfg.com/1418N4

Application

- Designed for use as instrument enclosures, electric, hydraulic or pneumatic control housings, electrical junction boxes or terminal wiring enclosures.
- Provides protection where equipment may be hosed down or otherwise be very wet, or in outdoor applications for full weather protection.

Standards

- UL 508A Type 3R,12, 4
- CSA Type 3R, 12, 4
- Complies with
  - NEMA Type 3R, 4, 12 and 13
  - IEC 60529, IP66

Construction

- Formed 14 gauge steel bodies and doors.
- Smooth, continuously welded seams without knockouts, cutouts or holes.
- Door and body stiffeners are provided in the larger enclosures for extra rigidity. Welded brackets provide for enclosure mounting.
- Formed lip on door and enclosure exclude flowing liquids and contaminants.
- Stainless steel continuous hinge on door may be removed by pulling the stainless steel hinge pin.
- Door is secured with easily operated stainless steel clamps.
- Provision for padlocking.
- Seamless poured-in place gasket.
- A removable 12 gauge inner panel is included.
- Collar studs are provided for mounting inner panels.
- A bonding stud is provided on the door and a grounding stud is provided in the enclosure.
- A literature pocket is provided for the inside of the door.

Finish

- Cover and enclosure are finished in recoatable smooth ANSI 61 gray powder coating.
- Removable inner panel is finished in white powder coating.

Accessories

- Additional Inner Panels...*See Page* ***281***
- Perforated Inner Panels...*See Page* ***285***
- Swing Panel Kit...*See Page* ***288***
- Door Stop Kit...*See Page* ***304***
- Door Clamping Hardware...*See Page* ***268***
- Wallmount Quick Release Clamp...*See Page* ***269***
- Lock kit...*See Page* ***271***
- Drip Shield Kit...*See Page* ***303***
- Floor Stand Kit...*See Page* ***304***
- Window Kits...*See Page* ***294***
- Enclosure Stabilizers...*See Page* ***305***
- Climate Control...*See Page* ***234***
- Lighting...*See Page* ***298***
- General Accessories...*See Page* ***268***

Distributed by Gross Automation Inc. (562) 252-1600. | hammondsales@grossautomation.com

Technical references and CAD downloads available at www.hammondmfg.com

All dimensions in inches unless specified otherwise

Quality Products. Service Excellence.
© Hammond Manufacturing
Canada: 519.822.2960 or 905.456.3770 USA: 716.630.7030
Data Subject to change without notice

Type 4 Mild Steel Wallmount Enclosure *1418 N4 Series*

Continuous Hinge Door with Clamps

	Enclosure			Panel	
Part No.	H	W	D	H	W
1418N4B6	16.00	12.00	6.00	13.00	9.00
1418N4G6	16.00	16.00	6.00	13.00	13.00
1418N4CR6	16.00	20.00	6.00	13.00	17.00
1418N4C6	20.00	16.00	6.00	17.00	13.00
1418N4D6	20.00	20.00	6.00	17.00	17.00
1418N4AR6	24.00	12.00	6.00	21.00	9.00
1418N4H6	24.00	16.00	6.00	21.00	13.00
1418N4E6	24.00	20.00	6.00	21.00	17.00
1418N4J6	24.00	24.00	6.00	21.00	21.00
1418N4F6	30.00	20.00	6.00	27.00	17.00
1418N4K6	30.00	24.00	6.00	27.00	21.00
1418N4L6	36.00	24.00	6.00	33.00	21.00
1418N4B8	16.00	12.00	8.00	13.00	9.00
1418N4C8	20.00	16.00	8.00	17.00	13.00
1418N4D8	20.00	20.00	8.00	17.00	17.00
1418N4ER8	20.00	24.00	8.00	17.00	21.00
1418N4E8	24.00	20.00	8.00	21.00	17.00
1418N4J8	24.00	24.00	8.00	21.00	21.00
1418N4KR8	24.00	30.00	8.00	21.00	27.00
1418N4F8	30.00	20.00	8.00	27.00	17.00
1418N4K8	30.00	24.00	8.00	27.00	21.00
1418N4KK8	30.00	30.00	8.00	27.00	27.00
1418N4L8	36.00	24.00	8.00	33.00	21.00
1418N4M8	36.00	30.00	8.00	33.00	27.00
1418N4O8	42.00	30.00	8.00	39.00	27.00
1418N4P8	42.00	36.00	8.00	39.00	33.00
1418N4S8	48.00	36.00	8.00	45.00	33.00
1418N4T8	60.00	36.00	8.00	57.00	33.00
1418N4C10	20.00	16.00	10.00	17.00	13.00
1418N4E10	24.00	20.00	10.00	21.00	17.00
1418N4K10	30.00	24.00	10.00	27.00	21.00
1418N4M10	36.00	30.00	10.00	33.00	27.00
1418N4R10	48.00	30.00	10.00	45.00	27.00
1418N4S10	48.00	36.00	10.00	45.00	33.00
1418N4T10	60.00	36.00	10.00	57.00	33.00
1418N4E12	24.00	20.00	12.00	21.00	17.00
1418N4K12	30.00	24.00	12.00	27.00	21.00
1418N4L12	36.00	24.00	12.00	33.00	21.00
1418N4M12	36.00	30.00	12.00	33.00	27.00
1418N4P12	42.00	36.00	12.00	39.00	33.00
1418N4S12	48.00	36.00	12.00	45.00	33.00
1418N4K16	30.00	24.00	16.00	27.00	21.00
1418N4M16	36.00	30.00	16.00	33.00	27.00
1418N4S16	48.00	36.00	16.00	45.00	33.00
1418N4T16	60.00	36.00	16.00	57.00	33.00

Distributed by Gross Automation | +1 (262) 252-1600. | hammondsales@grossautomation.com

Technical references and CAD downloads available at www.hammondmfg.com

All dimensions in inches unless specified otherwise

© Hammond Manufacturing

Type 12 Mild Steel Two Door Wallmount Enclosure *1422 Series*

Continuous Hinge Door with Handle

Inner Panel Included

Quick Link: hammfg.com/1422

Application

- Designed to house electrical, electronic, hydraulic or pneumatic controls and instruments.
- Provides a degree of protection from falling dirt, dust, oil and water.

Standards

- UL 508A Type 12
- CSA Type 12
- Complies with
  - NEMA Type 12
  - IEC 60529, IP54

Construction

- Enclosures are formed 14 gauge steel with 12 gauge steel inner panels. Exceptions are 42”x60” and 48”x48” which are formed 12 gauge steel with 10 gauge steel inner panels.
- Smooth, continuously welded seams without knockouts, cutouts or holes.
- Body stiffeners are provided in enclosures 30” high or more for extra rigidity.
- Welded brackets provide for enclosure mounting.
- Gasketed overlapping doors eliminate the need for a center post.
- Continuously hinged doors may be removed by pulling the hinge pin.
- Doors are secured with a three point latch and operated with a key locking automotive type handle.
- Latch rods are equipped with rollers for easier door closing.
- Oil resistant gaskets are permanently secured.
- A removable 10 gauge inner panel is included in enclosures as noted.
- Smaller sizes include a 12 gauge inner panel.
- Collar studs are provided for mounting inner panels.
- A grounding stud is provided in the enclosure and a bonding stud is provided on the door.
- A literature pocket is provided for the inside of the door.

Finish

- Cover and enclosure are finished in recoatable smooth ANSI 61 gray powder coating on the inside and outside.
- Removable inner panel is finished in white powder coating.

Accessories

- Additional Inner Panels...*See Page* ***281***
- Door Stop Kit...*See Page* ***304***
- Enclosure Stabilizers...*See Page* ***305***
- Floor Stand Kit...*See Page* ***304***
- Window Kits...*See Page* ***294***
- Climate Control...*See Page* ***234***
- Lighting...*See Page* ***298***
- General Accessories...*See Page* ***268***

	Enclosure			Panel	
Part No.	H	W	D	H	W
1422P8	24.00	42.00	8.00	21.00	39.00
1422PW8	24.00	48.00	8.00	21.00	45.00
1422P10	24.00	42.00	10.00	21.00	39.00
1422R10	30.00	42.00	10.00	27.00	39.00
1422RW10	30.00	48.00	10.00	27.00	45.00
1422RX10	30.00	60.00	10.00	27.00	57.00
1422UV12	36.00	42.00	12.00	33.00	39.00
1422UW12	36.00	48.00	12.00	33.00	45.00
1422UX12	36.00	60.00	12.00	33.00	57.00
1422VV12	42.00	42.00	12.00	39.00	39.00
1422VW12	42.00	48.00	12.00	39.00	45.00
1422VX12	42.13	60.06	12.69	38.00	56.00
1422WW12	48.13	48.06	12.69	44.00	44.00

Distributed by Grossly Automated | +1 (262) 252-1600. | hammondsales@grossautomation.com

Technical references and CAD downloads available at www.hammondmfg.com

All dimensions in inches unless specified otherwise

© Hammond Manufacturing

Type 4 Mild Steel Wallmount Enclosure *HWHK Series*

Hinge Door with Handle

Quick Link: hammfg.com/HWHK

Application

- Designed to enclose electrical and/or electronic equipment and protect against harsh, industrial environments for wallmount applications.
- Provides protection where equipment may be hosed down or otherwise be very wet, or in outdoor applications for full weather protection.
- Ideal for processing plants, utility, outdoor municipal or petro chemical locations where easy yet secure access is required.

Standards

- UL 508A Type 3R, 4 and 12
- CSA Type 3R, 4 and 12
- Complies with
  - NEMA 3R, 4, 12 and 13
  - IEC 60529, IP 66

Construction

- Formed 14 gauge steel bodies and doors.
- Continuously welded seams ground smooth.
- Formed lip on enclosure to exclude flowing liquids and contaminants.
- Powder coated black zinc diecast pad lockable handle with 3 point roller latching system secures door.
- Stainless steel continuous hinge on door may be removed by pulling the stainless steel hinge pin
- Seamless poured-in place gasket.
- Collar studs provided for mounting inner panel.
- Bonding stud provided on door and grounding stud installed in enclosure.

Finish

- Cover and enclosure are finished in recoatable smooth ANSI 61 gray powder coating interior and exterior.

Accessories

- Additional Inner Panels...*See Page* ***281***
- Perforated Inner Panels...*See Page* ***285***
- Swing Panel Kit...*See Page* ***288***
- Door Stop Kit...*See Page* ***304***
- Type 12/4, 4X Handle Kits...*See Page* ***270***
- Drip Shield Kit...*See Page* ***303***
- Enclosure Stabilizers...*See Page* ***305***
- Floor Stand Kit...*See Page* ***304***
- Window Kits...*See Page* ***294***
- Climate Control...*See Page* ***234***
- Lighting...*See Page* ***298***
- General Accessories...*See Page* ***268***

	Overall Dimensions			Optional Inner Panel		
Part No.	A	B	C	Part No.	H	W
HW24206GYHK	24.00	20.00	6.00	18P2117	21.00	17.00
HW24246GYHK	24.00	24.00	6.00	18P2121	21.00	21.00
HW24168GYHK	24.00	16.00	8.00	18P2113	21.00	13.00
HW24208GYHK	24.00	20.00	8.00	18P2117	21.00	17.00
HW24248GYHK	24.00	24.00	8.00	18P2121	21.00	21.00
HW24308GYHK	24.00	30.00	8.00	18P2721	27.00	21.00
HW30208GYHK	30.00	20.00	8.00	18P2717	27.00	17.00
HW30248GYHK	30.00	24.00	8.00	18P2721	27.00	21.00
HW30308GYHK	30.00	30.00	8.00	18P2727	27.00	27.00
HW36248GYHK	36.00	24.00	8.00	18P3321	33.00	21.00
HW36308GYHK	36.00	30.00	8.00	18P3327	33.00	27.00
HW42368GYHK	42.00	36.00	8.00	18P3933	39.00	33.00
HW48368GYHK	48.00	36.00	8.00	18P4533	45.00	33.00
HW242010GYHK	24.00	20.00	10.00	18P2117	21.00	17.00
HW302410GYHK	30.00	24.00	10.00	18P2721	27.00	21.00
HW362410GYHK	36.00	24.00	10.00	18P3321	33.00	21.00
HW363010GYHK	36.00	30.00	10.00	18P3327	33.00	27.00
HW423010GYHK	42.00	30.00	10.00	18P3927	39.00	27.00
HW483610GYHK	48.00	36.00	10.00	18P4533	45.00	33.00
HW242412GYHK	24.00	24.00	12.00	18P2121	21.00	21.00
HW302412GYHK	30.00	24.00	12.00	18P2721	27.00	21.00
HW363012GYHK	36.00	30.00	12.00	18P3327	33.00	27.00
HW363612GYHK	36.00	36.00	12.00	18P3333	33.00	33.00
HW423612GYHK	42.00	36.00	12.00	18P3933	39.00	33.00
HW483612GYHK	48.00	36.00	12.00	18P4533	45.00	33.00
HW603612GYHK	60.00	36.00	12.00	18P5733	57.00	33.00
HW302416GYHK	30.00	24.00	16.00	18P2721	27.00	21.00
HW363016GYHK	36.00	30.00	16.00	18P3327	33.00	27.00
HW483616GYHK	48.00	36.00	16.00	18P4533	45.00	33.00
HW603616GYHK	60.00	36.00	16.00	18P5733	57.00	33.00

Alternative inner panel options also available.

Distributed by Gross Automation | +1 (262) 252-1600 | marketing@grossautomation.com

Technical references and CAD downloads available at www.hammondmfg.com

All dimensions in inches unless specified otherwise

© Hammond Manufacturing

Type 4 Two Door Wallmount Enclosure *HN4 WM Series*

Continuous Hinge Door with Handle

Inner Panel Included

Quick Link: hammfg.com/HN4WM

Application

- Designed to house electrical, electronic, hydraulic or pneumatic controls and instruments.
- Provides protection where equipment may be hosed down or otherwise be very wet, or in outdoor applications for full weather protection.

Construction

- Formed 12 gauge steel
- Smooth, continuously welded seams without knockouts, cutouts or holes.
- Doors are supported with heavy gauge continuous hinges.
- 3-pt padlocking door handle.
- Seamless poured-in place gasket.
- A grounding stud is provided in the enclosure and a bonding stud is provided on the door.
- Center post is removable for easy installation of the inner panel.

Standards

- UL 508A Type 3R, 4, and 12
- CSA Type 3R, 4, and 12
- Complies with
  - NEMA Type 3R, 4, 12 and 13
  - IEC 60529, IP66

Finish

- Cover and enclosure are phosphatized and finished in recoatable smooth ANSI 61 gray powder coating.
- Removable inner panel is finished in white powder coating.

Accessories

- Mechanical Interlock...*See Page* **280**
- Door Stop Kit...*See Page* **304**
- Barrier Kits for Type 4 Wallmount...*See Page* **312**
- Type 12/4, 4X Handle Kits...*See Page* **270**
- Drip Shield Kit...*See Page* **303**
- Window Kits...*See Page* **294**
- Climate Control...*See Page* **234**
- Lighting...*See Page* **298**
- General Accessories...*See Page* **268**

	Enclosure			Inner Panel	
Part Number	H	W	D	H	W
HN4WM24428GY	24.00	42.00	8.00	21.00	39.00
HN4WM24488GY	24.00	48.00	8.00	21.00	45.00
HN4WM304210GY	30.00	42.00	10.00	27.00	39.00
HN4WM304810GY	30.00	48.00	10.00	27.00	45.00
HN4WM306010GY	30.00	60.00	10.00	27.00	57.00
HN4WM364212GY	36.00	42.00	12.00	33.00	39.00
HN4WM364812GY	36.00	48.00	12.00	33.00	45.00
HN4WM366012GY	36.00	60.00	12.00	33.00	57.00
HN4WM424212GY	42.00	42.00	12.00	39.00	39.00
HN4WM424812GY	42.00	48.00	12.00	39.00	45.00
HN4WM426012GY	42.00	60.00	12.00	38.00	56.00
HN4WM484812GY	48.00	48.00	12.00	44.00	44.00

Distributed by Gross Automation | +1 (262) 252-1600. | hammondsales@grossautomation.com

Technical references and CAD downloads available at www.hammondmfg.com

All dimensions in inches unless specified otherwise

Quality Products. Service Excellence.
© Hammond Manufacturing
Canada: 519.822.2960 or 905.456.3770 USA: 716.630.7030
Data Subject to change without notice

Type 12 Mild Steel Two Door Floormount Enclosure *1422 FM Series*

Continuous Hinge Door with Handle

Quick Link: hammfg.com/1422FM

Application

- Designed to house electrical, electronic, hydraulic or pneumatic controls and instruments.
- Provides a degree of protection from falling dirt, dust, oil and water.

Standards

- UL 508A Type 12
- CSA Type 12
- Complies with
  - NEMA Type 12
  - IEC 60529, IP54

Construction

- Enclosures are formed steel - 14 gauge (54" high), 12 gauge (60" high), or combination 10/12 gauge (72" high).
- Smooth, continuously welded seams without knockouts, cutouts or holes.
- Body stiffeners are provided in enclosures for extra rigidity.
- Heavy duty lifting eyebolts are provided with reinforced support angles.
- 12" floor stands are welded to the enclosure. (w/ feet Part No.).
- Welded brackets provide for enclosure mounting (w/o feet Part No.).
- Gasketed overlapping doors eliminate the need for a center post.
- Continuously hinged doors may be removed by pulling the hinge pin.
- Doors are secured with a three point latch and operated with a key locking, padlockable handle.
- Latch rods are equipped with rollers for easier door closing.
- Oil resistant gaskets are permanently secured.
- A removable 10 gauge inner panel is included in enclosures 60" and larger. Smaller sizes include a 12 gauge inner panel.
- Provision for light kit mounting.
- Panel supports are provided in enclosures 60" and larger for easy panel installation.
- Collar studs are provided for mounting inner panels.
- A grounding stud is provided in the enclosure for each door and a bonding stud is provided on the door.
- A literature pocket is provided for the inside of the door.

Finish

- Cover and enclosure are phosphatized and finished in recoatable smooth ANSI 61 gray powder coating.
- Removable inner panel is finished in white powder coating.

Accessories

- Additional Inner Panels...*See Page* ***283***
- Door Stop Kit...*See Page* ***304***
- Enclosure Stabilizers...*See Page* ***305***
- Floor Stand Kit...*See Page* ***304***
- Top Hat Cable Modules...*See Page* ***311***
- Window Kits...*See Page* ***294***
- Climate Control...*See Page* ***234***
- Lighting...*See Page* ***298***
- General Accessories...*See Page* ***268***

with Feet Part No.	w/o Feet Part No.	Enclosure H	Enclosure W	Enclosure D	Panel H	Panel W
1422A8F	1422A8	54.13	42.06	8.69	50.00	38.00
1422B8F	1422B8	60.13	48.06	8.69	56.00	44.00
1422B10F	1422B10	60.13	48.06	10.69	56.00	44.00
1422D10F	1422D10	60.13	60.06	10.69	56.00	56.00
1422E10F	1422E10	72.13	60.06	10.69	68.00	56.00
1422F10F	1422F10	72.13	72.06	10.69	68.00	38.00
1422B12F	1422B12	60.13	48.06	12.69	56.00	44.00
1422D12F	1422D12	60.13	60.06	12.69	56.00	56.00
1422E12F	1422E12	72.13	60.06	12.69	68.00	56.00
1422F12F	1422F12	72.13	72.06	12.69	68.00	68.00
1422B16F	1422B16	60.13	48.06	16.69	56.00	44.00
1422D16F	1422D16	60.13	60.06	16.69	56.00	56.00
1422E16F	1422E16	72.13	60.06	16.69	68.00	56.00
1422F16F	1422F16	72.13	72.06	16.69	68.00	68.00
1422B20F	1422B20	60.13	48.06	20.69	56.00	44.00
1422E20F	1422E20	72.13	60.06	20.69	68.00	56.00
1422F20F	1422F20	72.13	72.06	20.69	68.00	68.00
1422B24F	1422B24	60.13	48.06	24.69	56.00	44.00
1422D24F	1422D24	60.13	60.06	24.69	56.00	56.00
1422E24F	1422E24	72.13	60.06	24.69	68.00	56.00
1422F24F	1422F24	72.13	72.06	24.69	68.00	68.00

Distributed by Gross Automation | +1 (262) 252-1600. | hammondsales@grossautomation.com

Technical references and CAD downloads available at www.hammondmfg.com

All dimensions in inches unless specified otherwise

© Hammond Manufacturing

Type 4 Mild Steel Two Door Floormount Enclosure *1422 N4 FM Series*

Continuous Hinge Door with Clamps

Quick Link: hammfg.com/1422N4FM

Application

- Designed to house electrical, electronic, hydraulic or pneumatic controls and instruments.
- Provides protection where equipment may be hosed down or otherwise be very wet, or in outdoor applications for full weather protection.

Standards

- UL 508A Type 3R, 4 and 12
- CSA Type 3R, 4 and 12
- Complies with
  - NEMA Type 3R, 4 12 and 13
  - IEC 60529, IP66

Construction

- Enclosures are formed steel - 12 gauge (60” high) or combination 10/12 gauge (72” high).
- Smooth, continuously welded seams without knockouts, cutouts or holes.
- Body stiffeners are provided in the larger enclosures for extra rigidity.
- Heavy duty lifting eyebolts are provided with reinforcing support angles.
- Center post is removable for easy installation of the inner panel.
- Formed lip on door and top of enclosure opening exclude flowing liquids and contaminants.
- Continuously hinged doors may be removed by pulling the stainless steel hinge pin.
- Doors are secured with heavy duty stainless steel clamps.
- Provision for padlocking.
- 12” floor stands are welded to the enclosure.
- Seamless poured-in place gasket.
- Provision for light kit mounting.
- A removable 10 gauge inner panel is included.
- Panel supports are provided for easy panel installation.
- Collar studs are provided for mounting inner panels.
- A bonding stud is provided on the door and a grounding stud is provided in the enclosure for each door.
- A literature pocket is provided for the inside of the door.

Finish

- Cover and enclosure are finished in recoatable smooth ANSI 61 gray powder coating.
- Removable white inner panel is finished in white powder coating.

Accessories

- Additional Inner Panels...*See Page* ***283***
- Door Stop Kit...*See Page* ***304***
- Barrier Kits for Type 4 Floormount...*See Page* ***312***
- Drip Shield Kit...*See Page* ***303***
- Enclosure Stabilizers...*See Page* ***305***
- Climate Control...*See Page* ***234***
- Window Kits...*See Page* ***294***
- Lighting...*See Page* ***298***
- General Accessories...*See Page* ***268***

w/ Feet	Enclosure			Panel	
Part No.	H	W	D	H	W
1422N4B10F	60.13	48.06	10.69	56.00	44.00
1422N4D12F	60.13	60.06	12.69	56.00	56.00
1422N4E12F	72.13	60.06	12.69	68.00	56.00
1422N4F12F	72.13	72.06	12.69	68.00	68.00
1422N4F24F	72.13	72.06	24.69	68.00	68.00

Distributed by Gross Automation | +1 (262) 252-1600. | hammondsales@grossautomation.com

Technical references and CAD downloads available at www.hammondmfg.com

All dimensions in inches unless specified otherwise

Quality Products. Service Excellence.
© Hammond Manufacturing
Canada: 519.822.2960 or 905.456.3770 USA: 716.630.7030
Data Subject to change without notice

Type 4 Mild Steel Two Door Floormount Enclosure *1422 N4 FM QT Series*

Continuous Hinge Door with Quarter Turn

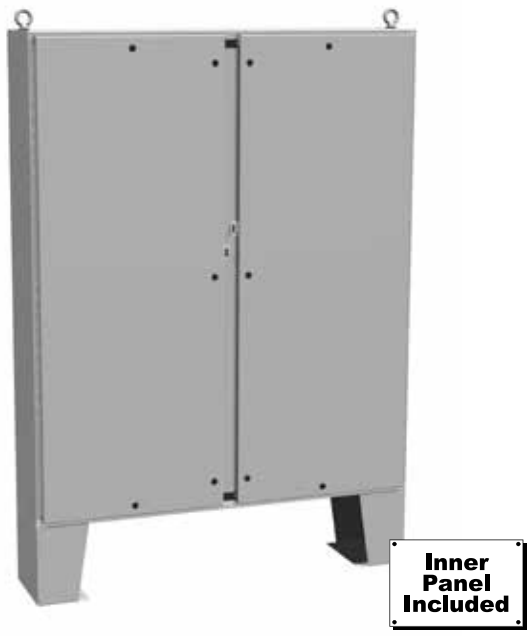

Quick Link: hammfg.com/1422N4FMQT

Application

- Designed to house electrical, electronic, hydraulic or pneumatic controls and instruments.
- Provides protection where equipment may be hosed down or otherwise be very wet, or in outdoor applications for full weather protection.

Standards

- UL 508A Type 3R, 4 and 12
- CSA Type 3R, 4 and 12
- Complies with
  - NEMA Type 3R, 4 12 and 13
  - IEC 60529, IP66

Construction

- Enclosures are formed steel - 12 gauge (60” high) or combination 10/12 gauge (72” high).
- Smooth, continuously welded seams without knockouts, cutouts or holes.
- Body stiffeners are provided in the larger enclosures for extra rigidity.
- Heavy duty lifting eyebolts are provided with reinforcing support angles.
- Center post is removable for easy installation of the inner panel.
- Formed lip on door and top of enclosure opening exclude flowing liquids and contaminants.
- Continuously hinged doors may be removed by pulling the stainless steel hinge pin.
- Doors are secured with quarter turn latches.
- Provision for padlocking.
- 12” floor stands are welded to the enclosure.
- Seamless poured-in place gasket.
- Provision for light kit mounting.
- A removable 10 gauge inner panel is included.
- Panel supports are provided for easy panel installation.
- Collar studs are provided for mounting inner panels.
- A bonding stud is provided on the door and a grounding stud is provided in the enclosure for each door.
- A literature pocket is provided for the inside of the door.

Finish

- Cover and enclosure are finished in recoatable smooth ANSI 61 gray powder coating.
- Removable white inner panel is finished in white powder coating.

Accessories

- Additional Inner Panels...*See Page* ***283***
- Door Stop Kit...*See Page* ***304***
- Barrier Kits for Type 4 Floormount...*See Page* ***312***
- Drip Shield Kit...*See Page* ***303***
- Enclosure Stabilizers...*See Page* ***305***
- Climate Control...*See Page* ***234***
- Window Kits...*See Page* ***294***
- Lighting...*See Page* ***298***
- General Accessories...*See Page* ***268***

	Enclosure			Panel	
Part No.	H	W	D	H	W
1422N4B10FQT	60.13	48.06	10.69	56.00	44.00
1422N4D12FQT	60.13	60.06	12.69	56.00	56.00
1422N4E12FQT	72.13	60.06	12.69	68.00	56.00
1422N4F12FQT	72.13	72.06	12.69	68.00	68.00
1422N4F24FQT	72.13	72.06	24.69	68.00	68.00

Distributed by Gross Automation | +1 (262) 252-1600. | hammondsales@grossautomation.com

Technical references and CAD downloads available at www.hammondmfg.com

All dimensions in inches unless specified otherwise

© Hammond Manufacturing

Type 4 Mild Steel Two Door Floormount Enclosure *HN4 FM Series*

Continuous Hinge Door with Handle

Quick Link: hammfg.com/HN4FM

Application

- Designed to house electrical, electronic, hydraulic or pneumatic controls and instruments.
- Provides protection where equipment may be hosed down or otherwise be very wet, or in outdoor applications for full weather protection.

Construction

- Enclosures are formed steel - 12 gauge (60" high) or combination 10/12 gauge (72" high).
- Smooth, continuously welded seams without knockouts, cutouts or holes.
- Lifting eyes provide for easy enclosure handling.
- Doors are supported with heavy gauge continuous hinges.
- 3-pt padlocking door handle.
- Seamless poured-in place gasket.
- Provision for light kit mounting.
- A grounding stud is provided in the enclosure and a bonding stud is provided on the door.
- Center post is removable for easy installation of the inner panel.
- 12" floor stands are welded to the enclosure.
- Body stiffeners are provided in the larger enclosures for extra rigidity.
- Formed lip on door and top of enclosure opening exclude flowing liquids and contaminants.
- A removable 10 gauge inner panel is included.
- Panel supports are provided for easy panel installation.
- Collar studs are provided for mounting inner panels.
- A literature pocket is provided for the inside of the door.

Standards

- UL 508A Type 3R, 4 and 12
- CSA Type 3R, 4 and 12
- Complies with:
  - NEMA Type 3R, 4, 12 and 3
  - IEC 60529, IP66

Finish

- Cover and enclosure are finished in recoatable smooth ANSI 61 gray powder coating.
- Removable white inner panel is finished in white powder coating.

Accessories

- Additional Inner Panels...*See Page* ***283***
- Door Stop Kit...*See Page* ***304***
- Barrier Kits for Type 4 Floormount...*See Page* ***312***
- Mechanical Interlock...*See Page* ***280***
- Drip Shield Kit...*See Page* ***303***
- Top Hat Cable Modules...*See Page* ***311***
- Enclosure Stabilizers...*See Page* ***305***
- Window Kits...*See Page* ***294***
- Climate Control...*See Page* ***234***
- Lighting...*See Page* ***298***
- General Accessories...*See Page* ***268***

	Enclosure			Inner Panel	
Part No.	H	W	D	H	W
HN4FM604810	60.13	48.06	10.69	56.00	44.00
HN4FM604818	60.13	48.06	18.69	56.00	44.00
HN4FM606012	60.13	60.06	12.69	56.00	56.00
HN4FM606018	60.13	60.06	18.69	56.00	56.00
HN4FM726012	72.13	60.06	12.69	68.00	56.00
HN4FM726018	72.13	60.06	18.69	68.00	56.00
HN4FM727212	72.13	72.06	12.69	68.00	68.00
HN4FM727218	72.13	72.06	18.69	68.00	68.00
HN4FM727224	72.13	72.06	24.69	68.00	68.00

© Hammond Manufacturing

Type 12 Mild Steel Freestanding Enclosure *1418 FS Series*

Continuous Hinge Door with Handle

Quick Link: hammfg.com/1418FS

Application

- Designed to house electrical, electronic, hydraulic or pneumatic controls with provision for panel mounting or rack mounting of equipment.
- Provides a degree of protection from falling dirt, dust, oil and water.
- Available with front access only or both front and rear access.
- A variety of inner panels, rack mounting rails and swing out frames are available to provide flexibility in mounting arrangements.

Standards

- UL 508A Type 12
- CSA Type 12
- Complies with
  - NEMA Type 12
  - IEC 60529, IP54

Construction

- Formed 12 gauge steel.
- Smooth, continuously welded seams without knockouts, cutouts or holes.
- Lifting eyes provide for easy enclosure handling.
- Doors are supported with heavy gauge continuous hinges.
- Doors are secured with a three point latch and operated with a key locking automotive type handle.
- Latch rods are equipped with rollers for easier door closing.
- Oil resistant gaskets are permanently secured .
- Provision for light kit mounting.
- Mounting channels are welded on the inside of the enclosure for mounting of optional inner panels or rack equipment rails.
- A grounding stud is provided in the enclosure and a bonding stud is provided on the door.
- A literature pocket is provided for the inside of the door (Two pockets are provided for dual access units).

Finish

- Cover and enclosure are phosphatized and finished in recoatable smooth ANSI 61 gray powder coating.
- Optional inner panels, rails, frames and supports are available in white powder coating.

Accessories

- Inner Panels...*See Page* ***286***
- Panel Rails...*See Page* ***293***
- Swing Out Frames...*See Page* ***292***
- Door Stop Kit...*See Page* ***304***
- Window Kits...*See Page* ***294***
- Climate Control...*See Page* ***234***
- Lighting...*See Page* ***298***
- General Accessories...*See Page* ***268***

Distributed by Gross Automation | +1 (262) 252-1600. | hammondsales@grossautomation.com

Technical references and CAD downloads available at www.hammondmfg.com

All dimensions in inches unless specified otherwise

© Hammond Manufacturing

Type 12 Mild Steel Freestanding Enclosure *1418 FS Series*

Continuous Hinge Door with Handle

Single Access

Part No.	Enclosure H	W	D	Optional Full Panel[1]
1418TW18	60.06	24.06	18.06	**60TWFW**
1418W18	72.06	24.06	18.06	**72WFW**
1418X18	72.06	30.06	18.06	**72XFW**
1418Y18	72.06	36.06	18.06	**72YFW**
1418YW20	90.06	24.06	20.06	**90YWFW**
1418YY20	90.06	36.06	20.06	**90YFW**
1418TY24	60.06	36.06	24.06	**60TYFW**
1418W24	72.06	24.06	24.06	**72WFW**
1418X24	72.06	30.06	24.06	**72XFW**
1418Y24	72.06	36.06	24.06	**72YFW**
1418YY24	90.06	36.06	24.06	**90YFW**
1418W30	72.06	24.06	30.06	**72WFW**
1418Y30	72.06	36.06	30.06	**72YFW**
1418W36	72.06	24.06	36.06	**72WFW**
1418Y36	72.06	36.06	36.06	**72YFW**
1418YY36	90.06	36.06	36.06	**90YFW**

[1] Refers to optional full height/full width panels. Depth panels/half height width panels are also available

Maximum Usable Depth

Enclosure Depth	Max Usable Depth
18.06	17.80
20.06	19.80
24.06	23.80
30.06	29.80
36.06	35.80

- Single Access only.
- From the inside surface of front door to front face of full width panel
- Inner panel in full back position

Dual Access

Part No.	Enclosure H	W	D	Optional Full Panel[1]
1418WD24	72.06	24.06	24.06	**72WFW**
1418XD24	72.06	30.06	24.06	**72XFW**
1418YD24	72.06	36.06	24.06	**72YFW**
1418YYD24	90.06	36.06	24.06	**90YFW**
1418WD30	72.06	24.06	30.03	**72WFW**
1418WD36	72.06	24.06	36.06	**72WFW**
1418YD36	72.06	36.06	36.06	**72YFW**
1418YYD36	90.06	36.06	36.06	**90YFW**

[1] Refers to optional full height/full width panels. Depth panels/half height width panels are also available

© Hammond Manufacturing

Type 4 Mild Steel Freestanding Enclosure *1418 N4 FS Series*

Continuous Hinge Door with Clamps

Quick Link: hammfg.com/1418N4FS

Application

- Designed to house electrical, electronic, hydraulic or pneumatic controls with provision for panel mounting or rack mounting of equipment.
- Provides protection where equipment may be hosed down or otherwise be very wet, or in specific applications where corrosion is a serious problem.
- A variety of inner panels, rack mounting rails and swing out frames are available to provide flexibility in mounting arrangements.

Standards

- UL 508A Type 3R, 4 and 12
- CSA Type 3R, 4 and 12
- Complies with
  - NEMA Type 3R, 4, 12 and 3
  - IEC 60529, IP66

Construction

- Formed 12 gauge steel.
- Smooth, continuously welded seams without knockouts, cutouts or holes.
- Lifting eyes provide for easy enclosure handling.
- Doors are supported with heavy gauge continuous hinges.
- Doors are secured with heavy duty stainless steel clamps.
- Seamless poured-in place gasket.
- Provision for light kit mounting.
- Mounting channels are welded on the inside of the enclosure for mounting of optional inner panels or rack equipment rails.
- A grounding stud is provided in the enclosure and a bonding stud is provided on the door.

Finish

- Cover and enclosure are finished in recoatable smooth ANSI 61 gray powder coating.
- Optional inner panels are available in white powder coating, or unpainted galvanized steel.

Accessories

- Inner Panels...*See Page* ***286***
- Panel Rails...*See Page* ***293***
- Swing Out Frames...*See Page* ***292***
- Door Stop Kit...*See Page* ***304***
- Drip Shield Kit...*See Page* ***303***
- Floor Stand Kit...*See Page* ***304***
- Window Kits...*See Page* ***294***
- Climate Control...*See Page* ***234***
- Lighting...*See Page* ***298***
- General Accessories...*See Page* ***268***

	Enclosure			Optional
Part No.	H	W	D	Full Panel[1]
1418N4W18	72.06	25.06	18.06	**72WFW**
1418N4X24	72.06	31.06	24.06	**72XFW**
1418N4Y24	72.06	37.06	24.06	**72YFW**

[1] Refers to optional full height/full width panels. Depth panels/half height width panels are also available

© Hammond Manufacturing

Type 4 Mild Steel Freestanding Enclosure *1418 N4 FS QT Series*

Continuous Hinge Door with Quarter Turn

Quick Link: hammfg.com/1418N4FSQT

Application

- Designed to house electrical, electronic, hydraulic or pneumatic controls with provision for panel mounting or rack mounting of equipment.
- Provides protection where equipment may be hosed down or otherwise be very wet, or in specific applications where corrosion is a serious problem.
- A variety of inner panels, rack mounting rails and swing out frames are available to provide flexibility in mounting arrangements.

Standards

- UL 508A Type 3R, 4 and 12
- CSA Type 3R, 4 and 12
- Complies with
  - NEMA Type 3R, 4, 12 and 3
  - IEC 60529, IP66

Construction

- Formed 12 gauge steel.
- Smooth, continuously welded seams without knockouts, cutouts or holes.
- Lifting eyes provide for easy enclosure handling.
- Doors are supported with heavy gauge continuous hinges.
- Doors are secured quarter turn latches.
- Seamless poured-in place gasket.
- Provision for light kit mounting.
- Mounting channels are welded on the inside of the enclosure for mounting of optional inner panels or rack equipment rails.
- A grounding stud is provided in the enclosure and a bonding stud is provided on the door.

Finish

- Cover and enclosure are finished in recoatable smooth ANSI 61 gray powder coating.
- Optional inner panels are available in white powder coating, or unpainted galvanized steel.

Accessories

- Inner Panels...*See Page* ***286***
- Panel Rails...*See Page* ***293***
- Swing Out Frames...*See Page* ***292***
- Door Stop Kit...*See Page* ***304***
- Drip Shield Kit...*See Page* ***303***
- Floor Stand Kit...*See Page* ***304***
- Window Kits...*See Page* ***294***
- Climate Control...*See Page* ***234***
- Lighting...*See Page* ***298***
- General Accessories...*See Page* ***268***

Part No.	Enclosure H	W	D	Optional Full Panel[1]
1418N4W18QT	72.06	25.06	18.06	**72WFW**
1418N4X24QT	72.06	31.06	24.06	**72XFW**
1418N4Y24QT	72.06	37.06	24.06	**72YFW**

[1] Refers to optional full height/full width panels. Depth panels/half height width panels are also available

© Hammond Manufacturing

Type 4 Mild Steel Freestanding Enclosure *HN4 FS Series*

Continuous Hinge Door with Handle

Quick Link: hammfg.com/HN4FS

Application

- Designed to house electrical, electronic, hydraulic or pneumatic controls with provision for panel mounting or rack mounting of equipment.
- Provides protection where equipment may be hosed down or otherwise be very wet, or in specific applications where corrosion is a serious problem.
- A variety of inner panels, rack mounting rails and swing out frames are available to provide flexibility in mounting arrangements.

Construction

- Formed 12 gauge steel.
- Smooth, continuously welded seams without knockouts, cutouts or holes.
- Lifting eyes provide for easy enclosure handling.
- Doors are supported with heavy gauge continuous hinges.
- New 3-pt padlocking door handle.
- Seamless poured-in place gasket.
- Provision for light kit mounting.
- A grounding stud is provided in the enclosure and a bonding stud is provided on the door.
- Mounting channels are welded on the inside of the enclosure for mounting of optional inner panels or rack equipment rails.

Standards

- UL 508A Type 3R, 4 and 12
- CSA Type 3R, 4 and 12
- Complies with:
  - NEMA Type 3R, 4, 12 and 3
  - IEC 60529, IP66

Finish

- Cover and enclosure are finished in recoatable smooth ANSI 61 gray powder coating.
- Optional inner panels are available in white powder coating, or unpainted galvanized steel.

Accessories

- Inner Panels...*See Page* ***286***
- Panel Rails...*See Page* ***293***
- Swing Out Frames...*See Page* ***292***
- Door Stop Kit...*See Page* ***304***
- Drip Shield Kit...*See Page* ***303***
- Floor Stand Kit...*See Page* ***304***
- Window Kits...*See Page* ***294***
- Climate Control...*See Page* ***234***
- Lighting...*See Page* ***298***
- General Accessories...*See Page* ***268***

	Enclosure			Optional
Part No.	H	W	D	Inner Panel
HN4FS722518	72.06	25.06	18.06	**72WFW**
HN4FS723124	72.06	31.06	24.06	**72XFW**
HN4FS723724	72.06	37.06	24.06	**72YFW**

[1] Refers to optional full height/full width panels. Depth panels/half height width panels are also available

© Hammond Manufacturing

Type 12 Mild Steel Two Door Freestanding Enclosure *1418 FS Series*

Continuous Hinge Door with Handle

Quick Link: hammfg.com/1418TDFS

Application

- Designed to house electrical, electronic, hydraulic or pneumatic controls with provision for panel mounting or rack mounting of equipment.
- Provides a degree of protection from falling dirt, dust, oil and water.
- Available with front access only or both front and rear access.
- A variety of inner panels, rack mounting angles and swing frames are available to provide flexibility in equipment mounting.

Standards

- UL 508A Type 12
- CSA Type 12
- Complies with
  - NEMA Type 12
  - IEC 60529, IP54

Construction

- Formed 12 gauge steel (10 gauge on back of single access enclosures).
- Smooth, continuously welded seams without knockouts, cutouts or holes.
- Stiffeners on the rear of the enclosure provide rigidity. (Single access)
- Lifting eyes provide for easy enclosure handling.
- Doors are supported with heavy gauge continuous hinges.
- Doors are secured with a three point latch and operated with a key locking automotive type handle.
- Latch rods are equipped with rollers for easier door closing.
- Oil resistant gaskets are permanently secured.
- Provision for light kit mounting.
- Mounting channels are welded on the inside of the enclosure for mounting of optional inner panels or rack equipment rails.
- A bonding stud is provided on the door and a grounding stud is provided in the enclosure for each door.
- A literature pocket is provided for the inside of the door (Two pockets are provided for dual access units).

Finish

- Cover and enclosure are phosphatized and finished in recoatable smooth ANSI 61 gray powder coating.
- Optional inner panels, rails, frames and supports are available in white powder coating.

Accessories

- Inner Panels...*See Page* **286**
- Center Panel Supports...*See Page* **292**
- Panel Rails...*See Page* **293**
- Swing Out Frames...*See Page* **292**
- Door Stop Kit...*See Page* **304**
- Top Hat Cable Modules...*See Page* **311**
- Climate Control...*See Page* **234**
- Window Kits...*See Page* **294**
- Lighting...*See Page* **298**
- General Accessories...*See Page* **268**

Single Access

Part No.	Enclosure H	W	D	Optional Full Panel[1]
1418AW18	60.06	48.06	18.06	**60AWFW**
1418ZW18	72.06	48.06	18.06	**72ZWFW**
1418ZX18	72.06	60.06	18.06	**72ZXFW**
1418ZY18	72.06	72.06	18.06	**72ZYFW**
1418BW20	90.06	48.06	20.06	**90BWFW**
1418BY20	90.06	72.06	20.06	**90BYFW**
1418BY24	90.06	72.06	24.06	**90BYFW**
1418ZW24	72.06	48.06	24.06	**72ZWFW**
1418ZX24	72.06	60.06	24.06	**72ZXFW**
1418ZY24	72.06	72.06	24.06	**72ZYFW**
1418ZX36	72.06	60.06	36.06	**72ZXFW**
1418BY36	90.06	72.06	36.06	**90BYFW**

[1] Refers to optional full height/full width panels. Depth panels/half height width panels are also available

Dual Access

Part No.	Enclosure H	W	D	Optional Full Panel[1]
1418ZWD24	72.06	48.06	24.06	**72ZWFW**
1418ZXD24	72.06	60.06	24.06	**72ZXFW**
1418ZYD24	72.06	72.06	24.06	**72ZYFW**
1418BYD24	90.06	72.06	24.06	**90BYFW**
1418ZXD36	72.06	60.06	36.06	**72ZXFW**

[1] Refers to optional full height/full width panels. Depth panels/half height width panels are also available

Distributed by Grossa Automation | 1 (262) 252-1600. | hammondsales@grossautomation.com

Technical references and CAD downloads available at www.hammondmfg.com

All dimensions in inches unless specified otherwise

© Hammond Manufacturing

Type 12 Mild Steel Multi-Door Freestanding Enclosure *1422 MD Series*

Continuous Hinge Door with Handle

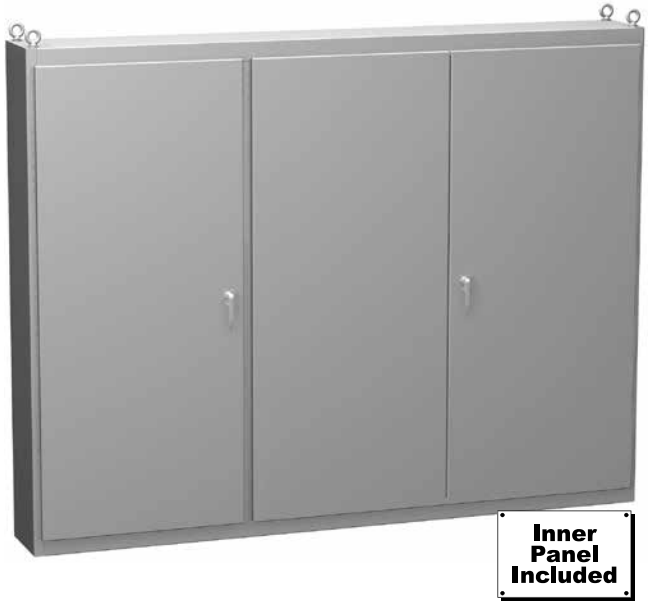

Quick Link: hammfg.com/1422MD

Application

- Designed to house electrical, electronic, hydraulic or pneumatic controls and instruments.
- Provides a degree of protection from falling dirt, dust, oil and water.

Standards

- UL 508A Type 12
- CSA Type 12
- Complies with
  - NEMA Type 12
  - IEC 60529, IP54

Construction

- Formed 10 gauge steel.
- Smooth, continuously welded seams without knockouts, cutouts or holes.
- Heavy duty body stiffeners are provided for extra rigidity.
- Reinforced eyebolts are provided for easy enclosure lifting.
- Double door openings have gasketed overlapping doors, eliminating the need for a center post.
- Continuously hinged doors may be removed by pulling the hinge pin.
- Doors are secured with a three point padlocking handle.
- Latch rods are equipped with rollers for easier door closing.
- Oil resistant gaskets are permanently secured.
- Removable 10 gauge inner panels are included in the enclosures.
- 3 door units have 2 panels (34" x 78" and 70" x 78").
- 4 door units have 2 panels (70" x 78" each).
- Slave doors have mechanical interlock and cannot be opened unless the master door is open.
- Panel supports are provided in enclosures for easy panel installation.
- Collar studs are provided for mounting inner panels.
- A grounding stud is provided in the enclosure for each door and a bonding stud is provided on the door.
- A literature pocket is provided for the inside of the door.

Finish

- Cover and enclosure are phosphatized and finished in recoatable smooth ANSI 61 gray powder coating.
- Removable inner panels are finished in white powder coating.

Accessories

- Door Stop Kit...*See Page* ***304***
- Floor Stand Kit...*See Page* ***304***
- Window Kits...*See Page* ***294***
- Climate Control...*See Page* ***234***
- Lighting...*See Page* ***298***
- General Accessories...*See Page* ***268***

	Enclosure			Inner Panels		
Part No.	H	W	D	H	W1	W2
1422MD3	86.12	112.00	14.12	78.00	70.00	34.00
1422MD320	86.12	112.00	20.12	78.00	70.00	34.00
1422MD4	86.12	149.12	14.12	78.00	70.00	70.00
1422MD420	86.12	149.12	20.12	78.00	70.00	70.00

Distributed by Gross Automation | +1 (262) 252-1600. | hammondsales@grossautomation.com

Technical references and CAD downloads available at www.hammondmfg.com

All dimensions in inches unless specified otherwise

© Hammond Manufacturing

Canada: 519.822.2960 or 905.456.3770 USA: 716.630.7030

Data Subject to change without notice

Stainless Steel Enclosures (Type 4X)

Type 4X Stainless Steel Junction Box
Eclipse Junior Series
Continuous Hinge Door with Quarter Turn..... 43

Type 4X Stainless Steel Junction Box
1414 N4 PH SS Series
Continuous Hinge Door with Clamps..... 44

Type 4X Stainless Steel Junction Box
1414 N4 SS Series
Lift-Off Cover with Clamps..... 45

Type 4X Stainless Steel Wallmount Enclosure
Eclipse Series
Hinge Door with Quarter Turn/Handle 46

Type 4X Stainless Steel Wallmount Enclosure w/ Window
Eclipse Series
Hinge Door with Quarter Turn..... 48

Type 4X Stainless Steel Wallmount Enclosure w/ Sloped Top
ST SS Series
Hinge Door with Quarter Turn..... 50

Type 4X Stainless Steel Wallmount Enclosure
1418 N4 SS Series
Continuous Hinge Door with Clamps..... 52

Type 4X Stainless Steel Wallmount Enclosure
HWSSHK Series
Hinge Door with Handle..... 54

Type 4X Painted White Stainless Steel Wallmount Enclosure
Eclipse Series
Hinge Door with Handle..... 56

Type 4X Stainless Steel Two Door Wallmount Enclosure
HN4 WM SS Series
Continuous Hinge Door with Handle 57

IP69K/Type 4X Stainless Steel Wallmount Enclosure
Waterfall Series
Sloped Top with Quarter Turns 58

Type 4X Stainless Steel Two Door Floormount Enclosure
1422 N4 SS Series
Continuous Hinge Door with Clamps..... 60

Type 4X Stainless Steel Two Door Floormount Enclosure
1422 N4 QT SS Series
Continuous Hinge Door with Quarter Turn..... 61

Type 4X Stainless Steel Two Door Floormount Enclosure
HN4 FM SS Series
Continuous Hinge Door with Handle 62

Type 4X Stainless Steel Freestanding Enclosure
1418 N4 FS SS Series
Continuous Hinge Door with Clamps..... 63

Type 4X Stainless Steel Freestanding Enclosure
1418 N4 FS QT SS Series
Continuous Hinge Door with Quarter Turn..... 66

Type 4X Stainless Steel Freestanding Enclosure
HN4 FS SS Series
Continuous Hinge Door with Handle 64

© Hammond Manufacturing

Type 4X Stainless Steel Junction Box *Eclipse Junior Series*

Continuous Hinge Door with Quarter Turn

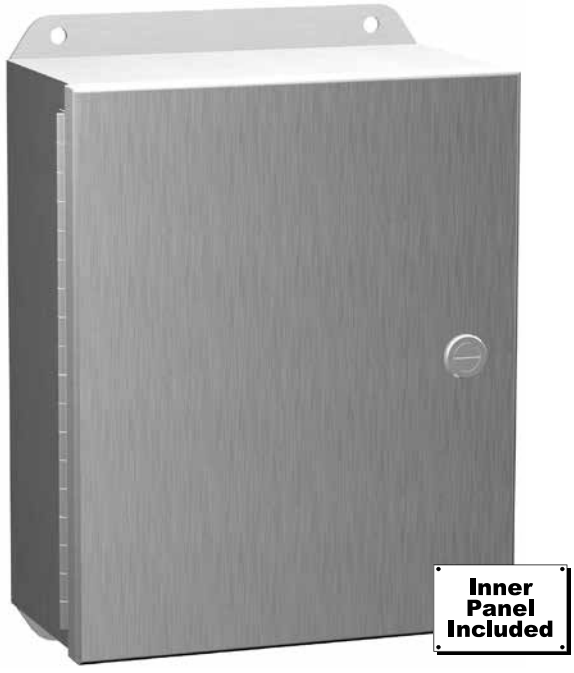

Quick Link: hammfg.com/EJSS

Application

- Designed for use as instrument enclosures, electric, hydraulic or pneumatic control housings, electrical junction boxes or terminal wiring enclosures.
- Provides protection where equipment may be hosed down or otherwise be very wet, or in specific applications where corrosion may be a problem.
- For high temperature applications, a gasket retainer may be required, please refer to factory.

Standards

- UL 508A Type 3R, 4, 4X, 12, and 13
- CSA Type 3R, 4, 4X, 12, and 13
- Complies with
  - NEMA Type 3R, 4, 4X, 12 and 13
  - IEC 60529, IP66

Construction

- Body and cover are formed from 16 guage 304 or 316 stainless steel.
- Smooth, continuously welded seams without knockouts, cutouts, or holes.
- Formed lip on enclosure to exclude flowing liquids and contaminants.
- 14 gauge welded brackets provide for enclosure mounting.
- Continuously hinged cover has stainless steel hinges and provides 180° opening.
- Door latches feature the added safety of quarter turn slot requiring use of tool for opening.
- Quarter turn latches formed from 316 stainless steel.
- Seamless poured-in-place gasket.
- Models larger than 4”x4” include a removable 14 gauge galvanized inner panel.
- Tapped studs are provided for mounting inner panels.
- A bonding stud is provided on the door and a grounding stud is provided on the enclosure.
- Grounding and panel mounting hardware provided.

Finish

- Cover and enclosure are natural stainless steel with a smooth brushed finish.
- Removable inner panel is unpainted galvanized steel.

Accessories

- Additional Inner Panels...*See Page* ***280***
- Swing Panel Kit...*See Page* ***288***
- Terminal Kit Assemblies...*See Page* ***288***
- Padlock Adaptor...*See Page* ***272***
- Quarter Turn Assemblies...*See Page* ***273***
- Climate Control...*See Page* ***234***
- General Accessories...*See Page* ***268***

304 S.S.	316 S.S.	Enclosure			Panel	
Part No.	Part No.	H	W	D	H	W
EJ443SS	EJ443S16	4.00	4.00	3.00	N/A	N/A
EJ444SS	EJ444S16	4.00	4.00	4.00	N/A	N/A
EJ643SS	EJ643S16	6.00	4.00	3.00	4.88	2.88
EJ863SS	EJ863S16	8.00	6.00	3.50	6.75	4.88
EJ644SS	EJ644S16	6.00	4.00	4.00	4.88	2.88
EJ664SS	EJ664S16	6.00	6.00	4.00	4.88	4.88
EJ884SS	EJ884S16	8.00	8.00	4.00	6.75	6.88
EJ1084SS	EJ1084S16	10.00	8.00	4.00	8.75	6.88
EJ1264SS	EJ1264S16	12.00	6.00	4.00	10.75	4.88
EJ12124SS	EJ12124S16	12.00	12.00	4.00	10.75	10.88
EJ12105SS	EJ12105S16	12.00	10.00	5.00	10.75	8.88
EJ866SS	EJ866S16	8.00	6.00	6.00	6.75	4.88
EJ1086SS	EJ1086S16	10.00	8.00	6.00	8.75	6.88
EJ10106SS	EJ10106S16	10.00	10.00	6.00	8.75	8.88
EJ12106SS	EJ12106S16	12.00	10.00	6.00	10.75	8.88
EJ12126SS	EJ12126S16	12.00	12.00	6.00	10.75	10.88
EJ14126SS	EJ14126S16	14.00	12.00	6.00	12.75	10.88
EJ16146SS	EJ16146S16	16.00	14.00	6.00	14.75	12.88
EJ12108SS	EJ12108S16	12.00	10.00	8.00	10.75	8.88
EJ14128SS	EJ14128S16	14.00	12.00	8.00	12.75	10.88
EJ16148SS	EJ16148S16	16.00	14.00	8.00	14.75	12.88
EJ161410SS	EJ161410S16	16.00	14.00	10.00	14.75	12.88

Distributed by Gross Automation | +1 (262) 252-1600. | hammondsales@grossautomation.com

Technical references and CAD downloads available at www.hammondmfg.com

All dimensions in inches unless specified otherwise

© Hammond Manufacturing

Type 4X Stainless Steel Junction Box *1414 N4 PH SS Series*

Continuous Hinge Door with Clamps

Quick Link: hammfg.com/1414N4PHSS

Application

- Designed for use as instrument enclosures, electric, hydraulic or pneumatic control housings, electrical junction boxes or terminal wiring enclosures.
- Provides protection where equipment may be hosed down or otherwise be very wet, or in specific applications where corrosion may be a problem.

Standards

- UL 508A Type 3R, 4, 4X, 12 and 13
- CSA Type 3R, 4, 4X, 12 and 13
- Complies with
  - NEMA Type 3R, 4, 4X, 12 and 13
  - IEC 60529, IP66

Construction

- Formed from 14 gauge 304 or 316 stainless steel.
- Smooth, continuously welded seams.
- Welded brackets provide for enclosure mounting.
- Continuous stainless steel hinged cover is secured with stainless steel clamps and screws.
- Seamless poured-in place gasket.
- All models include a removable 14 gauge inner panel.
- Tapped studs are provided for mounting inner panels.
- A bonding stud is provided on the door and a grounding stud is provided in the enclosure.

Finish

- Cover and enclosure are natural stainless steel with a smooth brushed finish.
- Removable inner panel is finished in white powder coating.

Accessories

- Additional Inner Panels...*See Page* ***280***
- Swing Panel Kit...*See Page* ***288***
- Terminal Kit Assemblies...*See Page* ***288***
- Door Clamping Hardware...*See Page* ***268***
- Junction Box Quick Release Clamp...*See Page* ***268***
- Junction Box Padlock Kit...*See Page* ***268***
- Climate Control...*See Page* ***234***
- General Accessories...*See Page* ***268***

304 S.S.	316 S.S.	Enclosure			Panel	
Part No.	Part No.	H	W	D	H	W
1414N4PHSSC4	1414N4PHS16C4	6.00	4.00	4.00	4.88	2.88
1414N4PHSSE	1414N4PHS16E	6.00	6.00	4.00	4.88	4.88
1414N4PHSSG	1414N4PHS16G	8.00	6.00	3.50	6.75	4.88
1414N4PHSSG4	1414N4PHS16G4	8.00	6.00	4.00	6.75	4.88
1414N4PHSSI	1414N4PHS16I	10.00	8.00	4.00	8.75	6.88
1414N4PHSSK	1414N4PHS16K	12.00	10.00	5.00	10.75	8.88
1414N4PHSSK6	1414N4PHS16K6	12.00	10.00	6.00	10.75	8.88
1414N4PHSSL6	1414N4PHS16L6	12.00	12.00	6.00	10.75	10.88
1414N4PHSSM6	1414N4PHS16M6	14.00	12.00	6.00	12.75	10.88
1414N4PHSSO6	1414N4PHS16O6	16.00	14.00	6.00	14.75	12.88
1414N4PHSSM8	1414N4PHS16M8	14.00	12.00	8.00	12.75	10.88
1414N4PHSSO10	1414N4PHS16O10	16.00	14.00	10.00	14.75	12.88

Distributed by Gross Automation | +1 (262) 252-1600 | hammondsales@grossautomation.com

Technical references and CAD downloads available at www.hammondmfg.com

All dimensions in inches unless specified otherwise

© Hammond Manufacturing

Data Subject to change without notice

Type 4X Stainless Steel Junction Box *1414 N4 SS Series*

Lift-Off Cover with Clamps

Quick Link: hammfg.com/1414N4SS

Application

- Designed for use as instrument enclosures, electric, hydraulic or pneumatic control housings, electrical junction boxes or terminal wiring enclosures.
- Provides protection where equipment may be hosed down or otherwise be very wet, or in specific applications where corrosion may be a problem.

Standards

- UL 508A Type 3R, 4, 4X, 12 and 13.
- CSA Type 3R, 4, 4X, 12 and 13.
- Complies with
  - NEMA Type 3R, 4, 4X, 12 and 13
  - IEC 60529, IP66

Construction

- Formed from 14 gauge 304 stainless steel.
- Smooth, continuously welded seams.
- Welded brackets provide for enclosure mounting.
- Lift-Off cover is secured with stainless steel clamps and screws.
- Seamless poured-in place gasket.
- All models larger than 4" x 4" include a removable 14 gauge inner panel.
- Tapped studs are provided for mounting inner panels.
- A bonding stud is provided on the door and a grounding stud is provided in the enclosure.

Finish

- Cover and enclosure are natural stainless steel with a smooth brushed finish.
- Removable inner panel is finished in white powder coating.

Accessories

- Additional Inner Panels...*See Page* ***280***
- Swing Panel Kit...*See Page* ***288***
- Terminal Kit Assemblies...*See Page* ***288***
- Door Clamping Hardware...*See Page* ***268***
- Climate Control...*See Page* ***234***
- General Accessories...*See Page* ***268***

	Enclosure			Panel	
Part No.	H	W	D	H	W
1414N4SSA	4.00	4.00	3.00	-	-
1414N4SSC4	6.00	4.00	4.00	4.88	2.88
1414N4SSG	8.00	6.00	3.50	6.75	4.88
1414N4SSE	6.00	6.00	4.00	4.88	4.88
1414N4SSI	10.00	8.00	4.00	8.75	6.88
1414N4SSK	12.00	10.00	5.00	10.75	8.88
1414N4SSM6	14.00	12.00	6.00	12.75	10.88
1414N4SSO6	16.00	14.00	6.00	14.75	12.88

© Hammond Manufacturing

Type 4X Stainless Steel Wallmount Enclosure *Eclipse Series*

Hinge Door with Quarter Turn/Handle

Quick Link: hammfg.com/EN4SDSS

Application

- Designed to enclose electrical and/or electronic equipment and protect against harsh, industrial environments for wallmount applications.
- Impressive styling features like hidden hinges and attractive latching systems make the Eclipse a suitable addition to any high-tech equipment installation.
- A wide range of sizes and practical accessories make this product line a complete package.

Standards

- UL 508A Type 3R, 4, 4X and 12
- CSA Type 3R, 4, 4X and 12
- Complies with
  - NEMA 3R, 4, 4X, 12 and 13
  - IEC 60529, IP 66

Construction

- Formed 14 (24x24" and larger) or 16 (24x20" and smaller) gauge stainless steel.
- Continuously welded seams ground smooth.
- Door stiffeners are provided where required for increased strength and rigidity - designed to also permit additional mounting options.
- Formed lip on enclosure to exclude flowing liquids and contaminants.
- Door latching: Type A has stainless steel slotted quarter turns, Type B has stainless steel handle with 3 point latching.
- Doors may be easily removed for modifications and are interchangeable.
- Seamless poured-in place gasket.
- Collar studs provided for mounting inner panel.
- Includes hardware kit with panel mounting nuts and sealing washers for wall mounting holes.
- Bonding stud provided on door and grounding stud installed in enclosure.
- Stainless steel hinge pins and quarter turns.
- Door alignment guide provided on 36" wide enclosures.

Finish

- Cover and enclosure are natural stainless steel with a smooth brushed finish.

Accessories

- Additional Inner Panels...*See Page* ***282***
- Swing Panel...*See Page* ***290***
- Swing Frame...*See Page* ***291***
- DIN Rail Mounting Kit...*See Page* ***276***
- DIN Rails...*See Page* ***276***
- Door Stop Kit...*See Page* ***304***
- Mounting Foot Kit...*See Page* ***277***
- Rear Hole Plugs...*See Page* ***277***
- Drip Shield Kit...*See Page* ***303***
- Quarter Turn Inserts and Keys...*See Page* ***273***
- Quarter Turn Assemblies...*See Page* ***273***
- Padlock Adaptor...*See Page* ***272***
- Handles...*See Page* ***276***
- Replacement Hinge Pins...*See Page* ***274***
- Window Kits...*See Page* ***294***
- Climate Control...*See Page* ***234***
- Lighting...*See Page* ***298***
- General Accessories...*See Page* ***268***

304 S.S.	316 S.S.	Enclosure				Optional Inner Panel		
Part No.	Part No.	H	W	D	Latch Type	Part No.	H	W
EN4SD12126SS	**EN4SD12126S16**	12.00	12.00	6.00	A	**EP1212**	10.20	10.20
EN4SD16126SS	**EN4SD16126S16**	16.00	12.00	6.00	A	**EP1612**	14.20	10.20
EN4SD16166SS	**EN4SD16166S16**	16.00	16.00	6.00	A	**EP1616**	14.20	14.20
EN4SD16206SS	-	16.00	20.00	6.00	A	**EP1620**	14.20	18.20
EN4SD20166SS	**EN4SD20166S16**	20.00	16.00	6.00	A	**EP2016**	18.20	14.20
EN4SD20206SS	**EN4SD20206S16**	20.00	20.00	6.00	A	**EP2020**	18.20	18.20
EN4SD24206SS	-	24.00	20.00	6.00	A	**EP2420**	22.20	18.20
EN4SD16128SS	**EN4SD16128S16**	16.00	12.00	8.00	A	**EP1612**	14.20	10.20
EN4SD16168SS	**EN4SD16168S16**	16.00	16.00	8.00	A	**EP1616**	14.20	14.20
EN4SD16208SS	**EN4SD16208S16**	16.00	20.00	8.00	A	**EP1620**	14.20	18.20

Alternative inner panel options also available.

Distributed by Gross Automation | +1 (262) 252-1600. | hammondsales@grossautomation.com

Technical references and CAD downloads available at www.hammondmfg.com

All dimensions in inches unless specified otherwise

© Hammond Manufacturing

Type 4X Stainless Steel Wallmount Enclosure *Eclipse Series*

Hinge Door with Quarter Turn/Handle

304 S.S.	316 S.S.	Enclosure				Optional Inner Panel		
Part No.	Part No.	H	W	D	Latch Type	Part No.	H	W
EN4SD20168SS	EN4SD20168S16	20.00	16.00	8.00	A	EP2016	18.20	14.20
EN4SD20208SS	EN4SD20208S16	20.00	20.00	8.00	A	EP2020	18.20	18.20
EN4SD20248SS	-	20.00	24.00	8.00	A	EP2024	18.20	22.20
EN4SD24168SS	EN4SD24168S16	24.00	16.00	8.00	A	EP2416	22.20	14.20
EN4SD24208SS	EN4SD24208S16	24.00	20.00	8.00	A	EP2420	22.20	18.20
EN4SD24248SS	EN4SD24248S16	24.00	24.00	8.00	A	EP2424	22.20	22.20
EN4SD24308SS	-	24.00	30.00	8.00	A	EP2430	22.20	28.20
EN4SD30208SS	-	30.00	20.00	8.00	A	EP3020	28.20	18.20
EN4SD30248SS	EN4SD30248S16	30.00	24.00	8.00	A	EP3024	28.20	22.20
EN4SD30308SS	EN4SD30308S16	30.00	30.00	8.00	A	EP3030	28.20	28.20
EN4SD36248SS	EN4SD36248S16	36.00	24.00	8.00	A	EP3624	34.20	22.20
EN4SD36308SS	EN4SD36308S16	36.00	30.00	8.00	A	EP3630	34.20	28.20
EN4SD42368SSR	-	42.00	36.00	8.00	A	EP4236	40.20	34.20
EN4SD48368SSR	-	48.00	36.00	8.00	A	EP4836	46.20	34.20
EN4SD161210SS	EN4SD161210S16	16.00	12.00	10.00	A	EP1612	14.20	10.20
EN4SD161610SS	EN4SD161610S16	16.00	16.00	10.00	A	EP1616	14.20	14.20
EN4SD162010SS	EN4SD162010S16	16.00	20.00	10.00	A	EP1620	14.20	18.20
EN4SD201610SS	EN4SD201610S16	20.00	16.00	10.00	A	EP2016	18.20	14.20
EN4SD202010SS	EN4SD202010S16	20.00	20.00	10.00	A	EP2020	18.20	18.20
EN4SD202410SS	EN4SD202410S16	20.00	24.00	10.00	A	EP2024	18.20	22.20
EN4SD241610SS	EN4SD241610S16	24.00	16.00	10.00	A	EP2416	22.20	14.20
EN4SD242010SS	EN4SD242010S16	24.00	20.00	10.00	A	EP2420	22.20	18.20
EN4SD242410SS	EN4SD242410S16	24.00	24.00	10.00	A	EP2424	22.20	22.20
EN4SD243010SS	EN4SD243010S16	24.00	30.00	10.00	A	EP2430	22.20	28.20
EN4SD302010SS	EN4SD302010S16	30.00	20.00	10.00	A	EP3020	28.20	18.20
EN4SD302410SS	EN4SD302410S16	30.00	24.00	10.00	A	EP3024	28.20	22.20
EN4SD303010SS	EN4SD303010S16	30.00	30.00	10.00	A	EP3030	28.20	28.20
EN4SD303012SS		30.00	30.00	12.00	A	EP3030	28.20	28.20
EN4SD362410SS	EN4SD362410S16	36.00	24.00	10.00	A	EP3624	34.20	22.20
EN4SD363010SS	EN4SD363010S16	36.00	30.00	10.00	A	EP3630	34.20	28.20
EN4SD363610SSR	EN4SD363610S16R	36.00	36.00	10.00	A	EP3636	34.20	34.20
EN4SD423010SSR	-	42.00	30.00	10.00	A	EP4230	40.20	28.20
EN4SD423610SSR	EN4SD423610S16R	42.00	36.00	10.00	A	EP4236	40.20	34.20
EN4SD482410SS	EN4SD482410S16	48.00	24.00	10.00	B	EP4824	46.20	26.20
EN4SD483610SSR	EN4SD483610S16R	48.00	36.00	10.00	A	EP4836	46.20	34.20
EN4SD603610SSR	EN4SD603610S16R	60.00	36.00	10.00	A	EP6036	58.20	34.20
EN4SD202012SS	EN4SD202012S16	20.00	20.00	12.00	A	EP2020	18.20	18.20
EN4SD242412SS	EN4SD242412S16	24.00	24.00	12.00	A	EP2424	22.20	22.20
EN4SD302412SS	EN4SD302412S16	30.00	24.00	12.00	A	EP3024	28.20	22.20
EN4SD362412SS	EN4SD362412S16	36.00	24.00	12.00	A	EP3624	34.20	22.20
EN4SD363012SS	EN4SD363012S16	36.00	30.00	12.00	A	EP3630	34.20	28.20
EN4SD363612SSR	EN4SD363612S16R	36.00	36.00	12.00	A	EP3636	34.20	34.20
EN4SD423612SSR	EN4SD423612S16R	42.00	36.00	12.00	A	EP4236	40.20	34.20
EN4SD483612SSR	EN4SD483612S16R	48.00	36.00	12.00	A	EP4836	46.20	34.20
EN4SD603612SSR	EN4SD603612S16R	60.00	36.00	12.00	A	EP6036	58.20	34.20
EN4SD723612SSR	EN4SD723612S16R	72.00	36.00	12.00	A	EP7236	70.20	34.20
EN4SD302416SS	-	30.00	24.00	16.00	A	EP3024	28.20	22.20
EN4SD363016SS	-	36.00	30.00	16.00	A	EP3630	34.20	28.20
EN4SD483616SSR	EN4SD483616S16R	48.00	36.00	16.00	A	EP4836	46.20	34.20

Alternative inner panel options also available

Distributed by Gross Automation | +1 (262) 252-1600. | hammondsales@grossautomation.com

Technical references and CAD downloads available at www.hammondmfg.com

All dimensions in inches unless specified otherwise

© Hammond Manufacturing

Type 4X Stainless Steel Wallmount Enclosure w/ Window *Eclipse Series*

Hinge Door with Quarter Turn

Quick Link: hammfg.com/EN4SDWSS

Application

- Designed to enclose electrical and/or electronic equipment in wallmount applications where viewing of component operation is necessary while maintaining protection ratings.
- Impressive styling features like hidden hinges and attractive latching systems make the Eclipse a suitable addition to any high-tech equipment installation.
- A wide range of sizes and practical accessories make this product line a complete package.

Standards

- UL 508A Type 3R, 4, 4X and 12
- CSA Type 3R, 4, 4X and 12
- Complies with
  - NEMA Type 3R, 4, 4X, 12 and 13
  - IEC 60529, IP66

Construction

- Formed 14 (24x24" and larger) or 16 (24x20" and smaller) gauge stainless steel.
- Full view UV resistant polycarbonate window allows maximum viewing area of inner panel.
- Continuously welded seams ground smooth.
- Door stiffeners are provided where required for increased strength and rigidity - designed to also permit additional mounting options.
- Formed lip on enclosure to exclude flowing liquids and contaminants.
- Door latches feature the added safety of quarter turn slot requiring use of tool for opening.
- Doors may be easily removed for modifications and are interchangeable.
- Seamless poured-in place gasket.
- Collar studs provided for mounting inner panel.
- Includes hardware kit with panel mounting nuts and sealing washers for wall mounting holes.
- Bonding stud provided on door and grounding stud installed in enclosure.
- Hinges are constructed from stainless steel.
- Stainless steel hinge pins and quarter turns.

Finish

- Cover and enclosure are natural stainless steel with a smooth brushed finish.

Accessories

- Additional Inner Panels...*See Page* ***282***
- Swing Panel...*See Page* ***290***
- Swing Frame...*See Page* ***291***
- Eclipse Rack Panel...*See Page* ***291***
- DIN Rail Mounting Kit...*See Page* ***276***
- DIN Rails...*See Page* ***276***
- Door Stop Kit...*See Page* ***304***
- Mounting Foot Kit...*See Page* ***277***
- Rear Hole Plugs...*See Page* ***277***
- Drip Shield Kit...*See Page* ***303***
- Quarter Turn Inserts and Keys...*See Page* ***273***
- Quarter Turn Assemblies...*See Page* ***273***
- Padlock Adaptor...*See Page* ***272***
- Handles...*See Page* ***276***
- Replacement Hinge Pins...*See Page* ***274***
- Climate Control...*See Page* ***234***
- Lighting...*See Page* ***298***
- General Accessories...*See Page* ***268***

Distributed by Gross Automation | +1 (262) 252-1600. | hammondsales@grossautomation.com

Technical references and CAD downloads available at www.hammondmfg.com

All dimensions in inches unless specified otherwise

Quality Products. Service Excellence.

© Hammond Manufacturing

Type 4X Stainless Steel Wallmount Enclosure w/ Window *Eclipse Series*

Hinge Door with Quarter Turn

	Enclosure			Optional Inner Panel		
Part No.	H	W	D	Part No.	H	W
EN4SD12126WSS	12.00	12.00	6.00	**EP1212**	10.20	10.20
EN4SD16126WSS	16.00	12.00	6.00	**EP1612**	14.20	10.20
EN4SD20166WSS	20.00	16.00	6.00	**EP2016**	18.20	14.20
EN4SD20206WSS	20.00	20.00	6.00	**EP2020**	18.20	18.20
EN4SD20168WSS	20.00	16.00	8.00	**EP2016**	18.20	14.20
EN4SD20208WSS	20.00	20.00	8.00	**EP2020**	18.20	18.20
EN4SD24208WSS	24.00	20.00	8.00	**EP2420**	22.20	18.20
EN4SD24248WSS	24.00	24.00	8.00	**EP2424**	22.20	22.20
EN4SD30248WSS	30.00	24.00	8.00	**EP3024**	28.20	22.20
EN4SD161210WSS	16.00	12.00	10.00	**EP1612**	14.20	10.20
EN4SD201610WSS	20.00	16.00	10.00	**EP2016**	18.20	14.20
EN4SD202010WSS	20.00	20.00	10.00	**EP2020**	18.20	18.20
EN4SD242010WSS	24.00	20.00	10.00	**EP2420**	22.20	18.20
EN4SD242410WSS	24.00	24.00	10.00	**EP2424**	22.20	22.20
EN4SD302410WSS	30.00	24.00	10.00	**EP3024**	28.20	22.20
EN4SD202012WSS	20.00	20.00	12.00	**EP2020**	18.20	18.20
EN4SD302412WSS	30.00	24.00	12.00	**EP3024**	28.20	22.20

All window door latch types are quarter turns. Alternative inner panel options also available.

© Hammond Manufacturing

Type 4X Stainless Steel Wallmount Enclosure w/ Sloped Top *ST SS Series*

Hinge Door with Quarter Turn

Quick Link: hammfg.com/EN4SDSTSS

Application

- Designed to enclose electrical and/or electronic equipment and protect against harsh, industrial environments for wallmount applications.
- Sloped top prevents water from resting on top as well as providing potential for controls mounting.
- Impressive styling features like hidden hinges and attractive latching systems make the Eclipse a suitable addition to any high-tech equipment installation.
- A wide range of sizes and practical accessories make this product line a complete package.

Standards

- UL 508A Type 3R, 4, 4X and 12
- CSA Type 3R, 4, 4X and 12
- Complies with
  - NEMA 3R, 4, 4X, 12 and 13
  - IEC 60529, IP 66

Construction

- Formed 14 gauge 304 stainless steel.
- Continuously welded seams ground smooth.
- Door stiffeners are provided where required for increased strength and rigidity - designed to also permit additional mounting options.
- Formed lip on enclosure to exclude flowing liquids and contaminants.
- Door latches feature the added safety of quarter turn slot requiring use of tool for opening.
- Doors may be easily removed for modifications and are interchangeable.
- Seamless poured-in place gasket.
- Collar studs provided for mounting inner panel.
- Includes hardware kit with panel mounting nuts and sealing washers for wall mounting holes.
- Bonding stud provided on door and grounding stud installed in enclosure.
- Hinges are 304 stainless.
- Stainless steel hinge pins and quarter turns.
- Door alignment guide provided on 36” wide enclosures.

Finish

- Cover and enclosure are natural stainless steel with a smooth brushed finish.

Accessories

- Additional Inner Panels...*See Page* ***282***
- Swing Panel...*See Page* ***290***
- Swing Frame...*See Page* ***291***
- DIN Rail Mounting Kit...*See Page* ***276***
- DIN Rails...*See Page* ***276***
- Door Stop Kit...*See Page* ***304***
- Mounting Foot Kit...*See Page* ***277***
- Rear Hole Plugs...*See Page* ***277***
- Drip Shield Kit...*See Page* ***303***
- Quarter Turn Inserts and Keys...*See Page* ***273***
- Quarter Turn Assemblies...*See Page* ***273***
- Padlock Adaptor...*See Page* ***272***
- Handles...*See Page* ***276***
- Replacement Hinge Pins...*See Page* ***274***
- Window Kits...*See Page* ***294***
- Climate Control...*See Page* ***234***
- Lighting...*See Page* ***298***
- General Accessories...*See Page* ***268***

Distributed by Gross Automation | +1 (262) 252-1600. | hammondsales@grossautomation.com

Technical references and CAD downloads available at www.hammondmfg.com

All dimensions in inches unless specified otherwise

Quality Products. Service Excellence.

© Hammond Manufacturing

Type 4X Stainless Steel Wallmount Enclosure w/ Sloped Top *ST SS Series*

Hinge Door with Quarter Turn

	Enclosure				Optional Inner Panel		
Part No.	H1	H2	W	D	Part No.	H	W
ST161208SS	16.00	18.89	12.00	8.00	**EP1612**	14.20	10.20
ST161608SS	16.00	18.89	16.00	8.00	**EP1616**	14.20	14.20
ST201608SS	20.00	22.89	16.00	8.00	**EP2016**	18.20	14.20
ST201612SS	20.00	24.35	16.00	12.00	**EP2016**	18.20	14.20
ST202008SS	20.00	22.89	20.00	8.00	**EP2020**	18.20	18.20
ST202012SS	20.00	24.35	20.00	12.00	**EP2020**	18.20	18.20
ST242008SS	24.00	26.89	20.00	8.00	**EP2420**	22.20	18.20
ST242408SS	24.00	26.89	24.00	8.00	**EP2424**	22.20	22.20
ST242412SS	24.00	28.35	24.00	12.00	**EP2424**	22.20	22.20
ST302408SS	30.00	32.89	24.00	8.00	**EP3024**	28.20	22.20
ST302412SS	30.00	34.35	24.00	12.00	**EP3024**	28.20	22.20
ST303008SS	30.00	32.89	30.00	8.00	**EP3030**	28.20	28.20
ST363008SS	36.00	38.89	30.00	8.00	**EP3630**	34.20	28.20
ST363012SS	36.00	40.35	30.00	12.00	**EP3630**	34.20	28.20
ST363016SS	36.00	41.80	30.00	16.00	**EP3630**	34.20	28.20
ST363612SS	36.00	40.35	36.00	12.00	**EP3636**	34.20	34.20
ST483616SS	48.00	53.80	36.00	16.00	**EP4836**	46.20	34.20
ST603616SS [1]	60.00	65.80	36.00	16.00	**EP6036**	58.20	34.20

Back is 10 gauge stainless steel. Alternative inner panel options also available.

© Hammond Manufacturing

Type 4X Stainless Steel Wallmount Enclosure *1418 N4 SS Series*

Continuous Hinge Door with Clamps

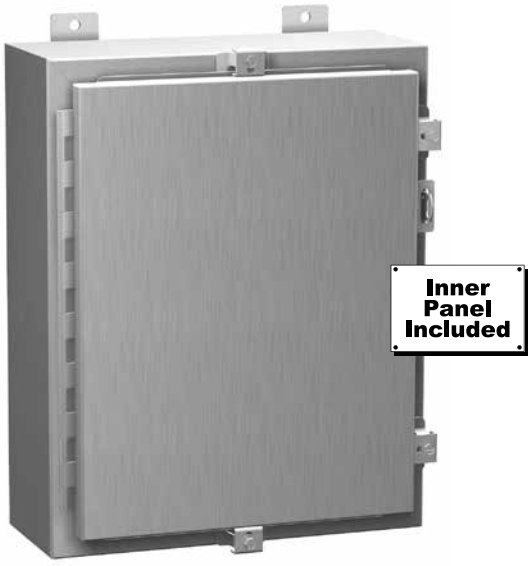

Quick Link: hammfg.com/1418N4SS

Application

- Designed for use as instrument enclosures, electric, hydraulic or pneumatic control housings, electrical junction boxes or terminal wiring enclosures.
- Provides protection where equipment may be hosed down or otherwise be very wet, or in specific applications where corrosion is a serious problem.

Standards

- UL 508A Type 3R, 4, 4X, and 12
- CSA Type 3R, 4, 4X, and 12
- Complies with
  - NEMA Type 3R, 4, 4X, 12 and 13
  - IEC 60529, IP66

Construction

- Formed 14 gauge 304 or 316 stainless steel.
- Smooth, continuously welded seams without knockouts, cutouts or holes.
- Door stiffeners are provided in the larger enclosures for extra rigidity.
- Welded brackets provide for enclosure mounting.
- Formed lip on door and enclosure excludes flowing liquids and contaminants.
- Stainless steel continuous hinge on door may be removed by pulling the stainless steel hinge pin.
- Door is secured with easily operated stainless steel clamps.
- Provision for padlocking.
- Seamless poured-in place gasket.
- A removable 12 gauge inner panel is included.
- Collar studs are provided for mounting inner panels.
- A bonding stud is provided on the door and a grounding stud is provided in the enclosure.
- A literature pocket is provided for the inside of the door.

Finish

- Cover and enclosure are natural stainless steel with a smooth brushed finish.
- Removable inner panel is finished in white powder coating.

Accessories

- Additional Inner Panels...*See Page* ***281***
- Perforated Inner Panels...*See Page* ***285***
- Swing Panel Kit...*See Page* ***288***
- Door Stop Kit...*See Page* ***304***
- Door Clamping Hardware...*See Page* ***268***
- Wallmount Quick Release Clamp...*See Page* ***269***
- Drip Shield Kit...*See Page* ***303***
- Floor Stand Kit...*See Page* ***304***
- Window Kits...*See Page* ***294***
- Climate Control...*See Page* ***234***
- Lighting...*See Page* ***298***
- General Accessories...*See Page* ***268***

Distributed by Gross Automation | +1 (800) 252-1600. | hammondsales@grossautomation.com

Technical references and CAD downloads available at www.hammondmfg.com

All dimensions in inches unless specified otherwise

Quality Products. Service Excellence.

© Hammond Manufacturing

Canada: 519.822.2960 or 905.456.3770 USA: 716.630.7030

Data Subject to change without notice

Type 4X Stainless Steel Wallmount Enclosure *1418 N4 SS Series*

Continuous Hinge Door with Clamps

304 S.S.	316 S.S.	Enclosure			Panel	
Part No.	Part No.	H	W	D	H	W
1418N4SSB6	1418N4S16B6	16.00	12.00	6.00	13.00	9.00
1418N4SSG6	1418N4S16G6	16.00	16.00	6.00	13.00	13.00
1418N4SSCR6	1418N4S16CR6	16.00	20.00	6.00	13.00	17.00
1418N4SSC6	1418N4S16C6	20.00	16.00	6.00	17.00	13.00
1418N4SSD6	1418N4S16D6	20.00	20.00	6.00	17.00	17.00
1418N4SSE6	1418N4S16E6	24.00	20.00	6.00	21.00	17.00
1418N4SSJ6	1418N4S16J6	24.00	24.00	6.00	21.00	21.00
1418N4SSB8	1418N4S16B8	16.00	12.00	8.00	13.00	9.00
1418N4SSC8	1418N4S16C8	20.00	16.00	8.00	17.00	13.00
1418N4SSD8	1418N4S16D8	20.00	20.00	8.00	17.00	17.00
1418N4SSER8	1418N4S16ER8	20.00	24.00	8.00	17.00	21.00
1418N4SSH8	1418N4S16H8	24.00	16.00	8.00	21.00	13.00
1418N4SSE8	1418N4S16E8	24.00	20.00	8.00	21.00	17.00
1418N4SSJ8	1418N4S16J8	24.00	24.00	8.00	21.00	21.00
1418N4SSKR8	1418N4S16KR8	24.00	30.00	8.00	21.00	27.00
1418N4SSF8	1418N4S16F8	30.00	20.00	8.00	27.00	17.00
1418N4SSK8	1418N4S16K8	30.00	24.00	8.00	27.00	21.00
1418N4SSKK8	1418N4S16KK8	30.00	30.00	8.00	27.00	27.00
1418N4SSL8	1418N4S16L8	36.00	24.00	8.00	33.00	21.00
1418N4SSM8	1418N4S16M8	36.00	30.00	8.00	33.00	27.00
1418N4SSP8	1418N4S16P8	42.00	36.00	8.00	39.00	33.00
1418N4SSS8	1418N4S16S8	48.00	36.00	8.00	45.00	33.00
1418N4SSC10	1418N4S16C10	20.00	16.00	10.00	17.00	13.00
1418N4SSE10	1418N4S16E10	24.00	20.00	10.00	21.00	17.00
1418N4SSK10	1418N4S16K10	30.00	24.00	10.00	27.00	21.00
1418N4SSL10	1418N4S16L10	36.00	24.00	10.00	33.00	21.00
1418N4SSM10	1418N4S16M10	36.00	30.00	10.00	33.00	27.00
1418N4SSO10	1418N4S16O10	42.00	30.00	10.00	39.00	27.00
1418N4SSS10	1418N4S16S10	48.00	36.00	10.00	45.00	33.00
1418N4SSJ12	1418N4S16J12	24.00	24.00	12.00	21.00	21.00
1418N4SSK12	1418N4S16K12	30.00	24.00	12.00	27.00	21.00
1418N4SSM12	1418N4S16M12	36.00	30.00	12.00	33.00	27.00
1418N4SSLL12	1418N4S16LL12	36.00	36.00	12.00	33.00	33.00
1418N4SSS12	1418N4S16S12	48.00	36.00	12.00	45.00	33.00
1418N4SST12	1418N4S16T12	60.00	36.00	12.00	57.00	33.00
1418N4SSK16	1418N4S16K16	30.00	24.00	16.00	27.00	21.00
1418N4SSM16	1418N4S16M16	36.00	30.00	16.00	33.00	27.00
1418N4SSS16	1418N4S16S16	48.00	36.00	16.00	45.00	33.00
1418N4SST16	1418N4S16T16	60.00	36.00	16.00	57.00	33.00

© Hammond Manufacturing

Type 4X Stainless Steel Wallmount Enclosure *HWSSHK Series*

Hinge Door with Handle

Quick Link: hammfg.com/HWN4SSHK

Application

- Designed to enclose electrical and/or electronic equipment and protect against harsh, industrial environments for wallmount applications.
- Provides high level of protection where equipment is hosed down or otherwise be exposed to wet conditions where corrosion is a serious problem.
- Ideal for processing plants, utility, outdoor municipal or petro chemical locations where easy yet secure access is required.

Standards

- UL 508A Type 3R, 4, 4X and 12
- CSA Type 3R, 4, 4X and 12
- Complies with
  - NEMA 3R, 4, 4X, 12 and 13
  - IEC 60529, IP 66

Construction

- Formed 14 gauge 304 or 316 stainless steel.
- Continuously welded seams ground smooth.
- Formed lip on enclosure to exclude flowing liquids and contaminants.
- 316 Stainless pad lockable handle with 3 point roller latching system secures door.
- Stainless steel continuous hinge on door may be removed by pulling the stainless steel hinge pin
- Seamless poured-in place gasket.
- Collar studs provided for mounting inner panel.
- Bonding stud provided on door and grounding stud installed in enclosure.

Finish

- Cover and enclosure are natural stainless steel with smooth brushed finish.

Accessories

- Additional Inner Panels...*See Page* ***281***
- Perforated Inner Panels...*See Page* ***285***
- Type 12/4, 4X Handle Kits...*See Page* ***270***
- Swing Panel Kit...*See Page* ***288***
- Door Stop Kit...*See Page* ***304***
- Drip Shield Kit...*See Page* ***303***
- Floor Stand Kit...*See Page* ***304***
- Window Kits...*See Page* ***294***
- Climate Control...*See Page* ***234***
- Lighting...*See Page* ***298***
- General Accessories...*See Page* ***268***

Distributed by Gross Automation | +1 (262) 252-1600. | hammondsales@grossautomation.com

Technical references and CAD downloads available at www.hammondmfg.com

All dimensions in inches unless specified otherwise

Quality Products. Service Excellence.

© Hammond Manufacturing

Canada: 519.822.2960 or 905.456.3770 USA: 716.630.7030

Data Subject to change without notice

Type 4X Stainless Steel Wallmount Enclosure *HWSSHK Series*

Hinge Door with Handle

304 S.S.	316 S.S.	Enclosure			Optional Inner Panel		
Part No.	Part No.	H	W	D	Part No.	H	W
HW24206SSHK	**HW24206S16HK**	24.00	20.00	6.00	**18P2117**	21.00	17.00
HW24246SSHK	**HW24246S16HK**	24.00	24.00	6.00	**18P2121**	21.00	21.00
HW24168SSHK	**HW24168S16HK**	24.00	16.00	8.00	**18P2113**	21.00	13.00
HW24208SSHK	**HW24208S16HK**	24.00	20.00	8.00	**18P2117**	21.00	17.00
HW24248SSHK	**HW24248S16HK**	24.00	24.00	8.00	**18P2121**	21.00	21.00
HW24308SSHK	**HW24308S16HK**	24.00	30.00	8.00	**18P2721**	21.00	27.00
HW30208SSHK	**HW30208S16HK**	30.00	20.00	8.00	**18P2717**	27.00	17.00
HW30248SSHK	**HW30248S16HK**	30.00	24.00	8.00	**18P2721**	27.00	21.00
HW30308SSHK	**HW30308S16HK**	30.00	30.00	8.00	**18P2727**	27.00	27.00
HW36248SSHK	**HW36248S16HK**	36.00	24.00	8.00	**18P3321**	33.00	21.00
HW36308SSHK	**HW36308S16HK**	36.00	30.00	8.00	**18P3327**	33.00	27.00
HW42368SSHK	**HW42368S16HK**	42.00	36.00	8.00	**18P3933**	39.00	33.00
HW48368SSHK	**HW48368S16HK**	48.00	36.00	8.00	**18P4533**	45.00	33.00
HW242010SSHK	**HW242010S16HK**	24.00	20.00	10.00	**18P2117**	21.00	17.00
HW302410SSHK	**HW302410S16HK**	30.00	24.00	10.00	**18P2721**	27.00	21.00
HW362410SSHK	**HW362410S16HK**	36.00	24.00	10.00	**18P3321**	33.00	21.00
HW363010SSHK	**HW363010S16HK**	36.00	30.00	10.00	**18P3327**	33.00	27.00
HW423010SSHK	**HW423010S16HK**	42.00	30.00	10.00	**18P3927**	39.00	27.00
HW483610SSHK	**HW483610S16HK**	48.00	36.00	10.00	**18P4533**	45.00	33.00
HW242412SSHK	**HW242412S16HK**	24.00	24.00	12.00	**18P2121**	21.00	21.00
HW302412SSHK	**HW302412S16HK**	30.00	24.00	12.00	**18P2721**	27.00	21.00
HW363012SSHK	**HW363012S16HK**	36.00	30.00	12.00	**18P3327**	33.00	27.00
HW363612SSHK	**HW363612S16HK**	36.00	36.00	12.00	**18P3333**	33.00	33.00
HW423612SSHK	**HW423612S16HK**	42.00	36.00	12.00	**18P3933**	39.00	33.00
HW483612SSHK	**HW483612S16HK**	48.00	36.00	12.00	**18P4533**	45.00	33.00
HW603612SSHK	**HW603612S16HK**	60.00	36.00	12.00	**18P5733**	57.00	33.00
HW302416SSHK	**HW302416S16HK**	30.00	24.00	16.00	**18P2721**	27.00	21.00
HW363016SSHK	**HW363016S16HK**	36.00	30.00	16.00	**18P3327**	33.00	27.00
HW483616SSHK	**HW483616S16HK**	48.00	36.00	16.00	**18P4533**	45.00	33.00
HW603616SSHK	**HW603616S16HK**	60.00	36.00	16.00	**18P5733**	57.00	33.00

Alternative inner panel options also available.

© Hammond Manufacturing

Type 4X Painted White Stainless Steel Wallmount Enclosure *Eclipse Series*

Hinge Door with Handle

Quick Link: hammfg.com/EN4SDSSWH

Application

- Designed to enclose electrical and/or electronic equipment and protect against harsh, industrial environments for wallmount applications.
- Impressive styling features like hidden hinges and attractive latching systems make the Eclipse a suitable addition to any high-tech equipment installation.
- A wide range of sizes and practical accessories make this product line a complete package.

Standards

- UL 508A Type 3R, 4, 4X and 12
- CSA Type 3R, 4, 4X and 12
- Complies with
  - NEMA 3R, 4, 4X, 12 and 13
  - IEC 60529, IP 66

Construction

- Formed 14 gauge 304 stainless steel.
- Continuously welded seams ground smooth.
- Door stiffeners are provided where required for increased strength and rigidity - designed to also permit additional mounting options.
- Formed lip on enclosure to exclude flowing liquids and contaminants.
- Doors are secured with a 3 point Handle in 316 stainless with pad lockable feature.
- Doors may be easily removed for modifications and are interchangeable.
- Seamless poured-in place gasket.
- Collar studs provided for mounting inner panel.
- Includes hardware kit with panel mounting nuts and sealing washers for wall mounting holes.
- Bonding stud provided on door and grounding stud installed in enclosure.
- Stainless steel hinge pins and hinges.

Finish

- Cover and enclosure are finished in recoatable smooth RAL 9003 White powder coating inside and out.

Accessories

- Additional Inner Panels...*See Page* ***282***
- Swing Panel...*See Page* ***290***
- Swing Frame...*See Page* ***291***
- DIN Rail Mounting Kit...*See Page* ***276***
- DIN Rails...*See Page* ***276***
- Door Stop Kit...*See Page* ***304***
- Mounting Foot Kit...*See Page* ***277***
- Rear Hole Plugs...*See Page* ***277***
- Drip Shield Kit...*See Page* ***303***
- Type 12/4, 4X Handle Kits...*See Page* ***270***
- Replacement Hinge Pins...*See Page* ***274***
- Climate Control...*See Page* ***234***
- Lighting...*See Page* ***298***
- General Accessories...*See Page* ***268***

	Enclosure			Optional Inner Panel		
Part No.	H	W	D	Part No.	H	W
EN4SD24248SSWH	24.00	24.00	8.00	**EP2424**	22.20	22.20
EN4SD30248SSWH	30.00	24.00	8.00	**EP3024**	28.20	22.20
EN4SD242010SSWH	24.00	20.00	10.00	**EP2420**	22.20	18.20
EN4SD242412SSWH	24.00	24.00	12.00	**EP2424**	22.20	22.20
EN4SD363012SSWH	36.00	30.00	12.00	**EP3630**	34.20	28.20
EN4SD363612SSWH	36.00	36.00	12.00	**EP3636**	34.20	34.20
EN4SD423612SSWH	42.00	36.00	12.00	**EP4236**	40.20	34.20
EN4SD483612SSWH	48.00	36.00	12.00	**EP4836**	46.20	34.20
EN4SD483616SSWH	48.00	36.00	16.00	**EP4836**	46.20	34.20
EN4SD603612SSWH	60.00	36.00	12.00	**EP6036**	58.20	34.20

Alternative inner panel options also available.

Distributed by Gross Automation | +1 (262) 252-1600. | hammondsales@grossautomation.com

Technical references and CAD downloads available at www.hammondmfg.com

All dimensions in inches unless specified otherwise

Quality Products. Service Excellence.

© Hammond Manufacturing

Type 4X Stainless Steel Two Door Wallmount Enclosure *HN4 WM SS Series*

Continuous Hinge Door with Handle

Inner Panel Included

Quick Link: hammfg.com/HN4WMSS

Application

- Designed to house electrical, electronic, hydraulic or pneumatic controls and instruments.
- Provides protection where equipment may be hosed down or otherwise be very wet, or in specific applications where corrosion is a serious problem.

Construction

- Formed 12 gauge 304 or 316 stainless steel.
- Smooth, continuously welded seams without knockouts, cutouts or holes.
- Doors are supported with heavy gauge continuous hinges.
- 3-pt padlocking door handle.
- Seamless poured-in place gasket.
- A grounding stud is provided in the enclosure and a bonding stud is provided on the door.
- Center post is removable for easy installation of the inner panel.

Standards

- UL 508A Type 3R, 4X, and 12
- CSA Type 3R, 4X, and 12
- Complies with
  - NEMA Type 3R, 4X, 12 and 13
  - IEC 60529, IP66

Finish

- Cover and enclosure are natural stainless steel with a smooth brushed finish.
- Removable inner panel is finished in white powder coating.

Accessories

- Door Stop Kit...*See Page* **304**
- Type 12/4, 4X Handle Kits...*See Page* **270**
- Drip Shield Kit...*See Page* **303**
- Window Kits...*See Page* **294**
- Mechanical Interlock...*See Page* **280**
- Barrier Kits for Type 4 Wallmount...*See Page* **312**
- Climate Control...*See Page* **234**
- Lighting...*See Page* **298**
- General Accessories...*See Page* **268**

304 S.S.	316 S.S.	Enclosure			Panel	
Part Number	Part Number	H	W	D	H	W
HN4WM24428SS	HN4WM24428S16	24.00	42.00	8.00	21.00	39.00
HN4WM24488SS	HN4WM24488S16	24.00	48.00	8.00	21.00	45.00
HN4WM304210SS	HN4WM304210S16	30.00	42.00	10.00	27.00	39.00
HN4WM304810SS	HN4WM304810S16	30.00	48.00	10.00	27.00	45.00
HN4WM306010SS	HN4WM306010S16	30.00	60.00	10.00	27.00	57.00
HN4WM364212SS	HN4WM364212S16	36.00	42.00	12.00	33.00	39.00
HN4WM364812SS	HN4WM364812S16	36.00	48.00	12.00	33.00	45.00
HN4WM366012SS	HN4WM366012S16	36.00	60.00	12.00	33.00	57.00
HN4WM424212SS	HN4WM424212S16	42.00	42.00	12.00	39.00	39.00
HN4WM424812SS	HN4WM424812S16	42.00	48.00	12.00	39.00	45.00
HN4WM426012SS	HN4WM426012S16	42.00	60.00	12.00	38.00	56.00
HN4WM484812SS	HN4WM484812S16	48.00	48.00	12.00	44.00	44.00

Distributed by: Grossa Automation | +1 (262) 252-1600 | hammondsales@grossaautomation.com

Technical references and CAD downloads available at www.hammondmfg.com

All dimensions in inches unless specified otherwise

© Hammond Manufacturing

IP69K/Type 4X Stainless Steel Wallmount Enclosure *Waterfall Series*

Sloped Top with Quarter Turns

Quick Link: hammfg.com/HWSTSS

Application

- Designed to enclose electrical and/or electronic equipment and protect against harsh, industrial environments for wallmount applications.
- Sloped top prevents water from resting on top as well as providing potential for controls mounting.
- Unique hinge design allows for easy cleaning in hose-down environments.
- A wide range of sizes and practical accessories make this product line a complete package.

Standards

- UL 508A Type 3R, 4, 4X and 12
- CSA Type 3R, 4, 4X and 12
- NSF – ANSI 169
  - Not all accessories shown maintain NSF standard. Some are internal and NSF is not applicable. Refer to each accessory individually or call factory for specifics.
- Complies with
  - NEMA 3R, 4, 4X, 12 and 13
  - IEC 60529, IP 66, IP69K

Construction

- Formed 304 or 316L stainless steel.
- Top sloped 25°
- Continuously welded seams ground smooth.
- Door stiffeners are provided where required for increased strength and rigidity - designed to also permit additional mounting options.
- Formed lip on enclosure to exclude flowing liquids and contaminants.
- Door latches (316 stainless steel quarter turns) feature the added safety of quarter turn slot requiring use of tool for opening.
- Door hinges (316 stainless steel) are easy to clean, provide 180 degree opening, are easily removed for modifications and are interchangeable.
- Seamless poured-in place gasket.
- Collar studs provided for mounting inner panel.
- Includes hardware kit with panel mounting nuts and sealing washers for wall mounting holes.
- Bonding stud provided on door and grounding stud installed in enclosure.

Finish

- Cover and enclosure are natural stainless steel with a smooth brushed finish.

Accessories

- Additional Inner Panels...*See Page* ***281***
- Perforated Inner Panels...*See Page* ***285***
- Door Stop Kit...*See Page* ***304***
- Mounting Foot Kit...*See Page* ***277***
- Rear Hole Plugs...*See Page* ***277***
- Washdown Quarter Turn Assemblies...*See Page* ***279***
- Quarter Turn Inserts and Keys...*See Page* ***273***
- Padlock Adaptor...*See Page* ***272***
- Wallmount Stand-offs...*See Page* ***279***
- Floor Stand Kit...*See Page* ***304***
- Wash Down Floor Stand Kit...*See Page* ***307***
- Climate Control...*See Page* ***234***
- Lighting...*See Page* ***298***
- General Accessories...*See Page* ***268***

Distributed by Gross Automation | +1 (262) 252-1600. | hammondsales@grossautomation.com

Technical references and CAD downloads available at www.hammondmfg.com

All dimensions in inches unless specified otherwise

Quality Products. Service Excellence.

© Hammond Manufacturing Canada: 519.822.2960 or 905.456.3770 USA: 716.630.7030 Data Subject to change without notice

IP69K/Type 4X Stainless Steel Wallmount Enclosure *Waterfall Series*

Sloped Top with Quarter Turns

304 SS	316 SS	Enclosure				Optional Inner Panel		
Part No.	Part No.	H1	H2	W	D	Part No.	H	W
HWST16128SS	**HWST16128S16**	16.00	19.70	12.00	8.00	**18P1309**	13	9
HWST16168SS	**HWST16168S16**	16.00	19.70	16.00	8.00	**18P1313**	13	13
HWST20168SS	**HWST20168S16**	20.00	23.70	16.00	8.00	**18P1713**	17	13
HWST20208SS	**HWST20208S16**	20.00	23.70	20.00	8.00	**18P1717**	17	17
HWST24208SS	**HWST24208S16**	24.00	27.70	20.00	8.00	**18P2117**	21	17
HWST24248SS	**HWST24248S16**	24.00	27.70	24.00	8.00	**18P2121**	21	21
HWST30248SS	**HWST30248S16**	30.00	33.70	24.00	8.00	**18P2721**	27	21
HWST30308SS	**HWST30308S16**	30.00	33.70	30.00	8.00	**18P2727**	27	27
HWST36308SS	**HWST36308S16**	36.00	39.70	30.00	8.00	**18P3327**	33	27
HWST201612SS	**HWST201612S16**	20.00	25.50	16.00	12.00	**18P1713**	17	13
HWST202012SS	**HWST202012S16**	20.00	25.50	20.00	12.00	**18P1717**	17	17
HWST242412SS	**HWST242412S16**	24.00	29.50	24.00	12.00	**18P2121**	21	21
HWST302412SS	**HWST302412S16**	30.00	35.50	24.00	12.00	**18P2721**	27	21
HWST363012SS	**HWST363012S16**	36.00	41.50	30.00	12.00	**18P3327**	33	27
HWST363612SS	**HWST363612S16**	36.00	41.50	36.00	12.00	**18P3333**	33	33
HWST363016SS	**HWST363016S16**	36.00	43.40	30.00	16.00	**18P3327**	33	27
HWST483616SS	**HWST483616S16**	48.00	55.40	36.00	16.00	**18P4533**	45	33
HWST603616SS	**HWST603616S16**	60.00	67.40	36.00	16.00	**18P5733**	57	33

Alternative inner panel options also available.

Distributed by Gross Automation | +1 (262) 252-1600. | hammondsales@grossautomation.com

Technical references and CAD downloads available at www.hammondmfg.com

All dimensions in inches unless specified otherwise

© Hammond Manufacturing

Type 4X Stainless Steel Two Door Floormount Enclosure *1422 N4 SS Series*

Continuous Hinge Door with Clamps

Quick Link: hammfg.com/1422N4SS

Application

- Designed to house electrical, electronic, hydraulic or pneumatic controls and instruments.
- Provides protection where equipment may be hosed down or otherwise be very wet, or in specific applications where corrosion is a serious problem.

Standards

- UL 508A Type 3R, 4, 4X, and 12
- CSA Type 3R, 4, 4X, and 12
- Complies with
  - NEMA Type 3R, 4, 4X, 12 and 13
  - IEC 60529, IP66

Construction

- Formed 12 gauge 304 or 316 stainless steel.
- Smooth, continuously welded seams without knockouts, cutouts or holes.
- Body stiffeners are provided in the larger enclosures for extra rigidity.
- Heavy duty stainless steel lifting eyebolts are provided with reinforcing support angles.
- Center post is removable for easy installation of the inner panel.
- Formed lip on door and top of enclosure opening exclude flowing liquids and contaminants.
- Continuously hinged doors may be removed by pulling the stainless steel hinge pin.
- Doors are secured with heavy duty stainless steel clamps.
- Provision for padlocking.
- 12” floor stands are welded to the enclosure.
- Seamless poured-in place gasket.
- Panel supports are provided for easy panel installation.
- Collar studs are provided for mounting inner panels.
- A bonding stud is provided on the door and a grounding stud is provided in the enclosure for each door.
- A literature pocket is provided.

Finish

- Cover and enclosure are natural stainless steel with a smooth brushed finish.
- Removable 10 gauge inner panel is finished in white powder coating.

Accessories

- Additional Inner Panels...*See Page* ***283***
- Door Stop Kit...*See Page* ***304***
- Barrier Kits for Type 4 Floormount...*See Page* ***312***
- Drip Shield Kit...*See Page* ***303***
- Door Clamping Hardware...*See Page* ***268***
- Wallmount Quick Release Clamp...*See Page* ***269***
- Window Kits...*See Page* ***294***
- Climate Control...*See Page* ***234***
- Lighting...*See Page* ***298***
- General Accessories...*See Page* ***268***

304 S.S.	316 S.S.	Enclosure			Panel	
Part No.	Part No.	H	W	D	H	W
1422N4SSB12F	1422N4S16B12F	60.13	48.06	12.69	56.00	44.00
1422N4SSD12F	1422N4S16D12F	60.13	60.06	12.69	56.00	56.00
1422N4SSE12F	1422N4S16E12F	72.13	60.06	12.69	68.00	56.00
1422N4SSF12F	1422N4S16F12F	72.13	72.06	12.69	68.00	68.00
1422N4SSF24F	1422N4S16F24F	72.13	72.06	24.69	68.00	68.00

Distributed by Grossauer Automation | +1 (262) 252-1602 | hammondsales@grossauerautomation.com

Technical references and CAD downloads available at www.hammondmfg.com

All dimensions in inches unless specified otherwise

© Hammond Manufacturing

Data Subject to change without notice

Type 4X Stainless Steel Two Door Floormount Enclosure *1422 N4 QT SS Series*

Continuous Hinge Door with Quarter Turn

Quick Link: hammfg.com/1422N4QTSS

Application

- Designed to house electrical, electronic, hydraulic or pneumatic controls and instruments.
- Provides protection where equipment may be hosed down or otherwise be very wet, or in specific applications where corrosion is a serious problem.

Standards

- UL 508A Type 3R, 4, 4X, and 12
- CSA Type 3R, 4, 4X, and 12
- Complies with
  - NEMA Type 3R, 4, 4X, 12 and 13
  - IEC 60529, IP66

Construction

- Formed 12 gauge 304 or 316 stainless steel.
- Smooth, continuously welded seams without knockouts, cutouts or holes.
- Body stiffeners are provided in the larger enclosures for extra rigidity.
- Heavy duty stainless steel lifting eyebolts are provided with reinforcing support angles.
- Center post is removable for easy installation of the inner panel.
- Formed lip on door and top of enclosure opening exclude flowing liquids and contaminants.
- Continuously hinged doors may be removed by pulling the stainless steel hinge pin.
- Doors are secured with quarter turn latches.
- Provision for padlocking.
- 12” floor stands are welded to the enclosure.
- Seamless poured-in place gasket.
- Panel supports are provided for easy panel installation.
- Collar studs are provided for mounting inner panels.
- A bonding stud is provided on the door and a grounding stud is provided in the enclosure for each door.
- A literature pocket is provided.

Finish

- Cover and enclosure are natural stainless steel with a smooth brushed finish.
- Removable 10 gauge inner panel is finished in white powder coating.

Accessories

- Additional Inner Panels...*See Page* ***283***
- Door Stop Kit...*See Page* ***304***
- Barrier Kits for Type 4 Floormount...*See Page* ***312***
- Drip Shield Kit...*See Page* ***303***
- Quarter Turn Inserts and Keys...*See Page* ***273***
- Window Kits...*See Page* ***294***
- Climate Control...*See Page* ***234***
- Lighting...*See Page* ***298***
- General Accessories...*See Page* ***268***

304 S.S.	316 S.S.	Enclosure			Panel	
Part No.	Part No.	H	W	D	H	W
1422N4SSB12FQT	1422N4S16B12FQT	60.13	48.06	12.69	56.00	44.00
1422N4SSD12FQT	1422N4S16D12FQT	60.13	60.06	12.69	56.00	56.00
1422N4SSE12FQT	1422N4S16E12FQT	72.13	60.06	12.69	68.00	56.00
1422N4SSF12FQT	1422N4S16F12FQT	72.13	72.06	12.69	68.00	68.00
1422N4SSF24FQT	1422N4S16F24FQT	72.13	72.06	24.69	68.00	68.00

Distributed by Grossa Automation | +1 (262) 252-1600 | hammondsales@grossautomation.com

Technical references and CAD downloads available at www.hammondmfg.com

All dimensions in inches unless specified otherwise

© Hammond Manufacturing

Canada: 519.822.2960 or 905.456.3770 USA: 716.630.7030

Data Subject to change without notice

Type 4X Stainless Steel Two Door Floormount Enclosure *HN4 FM SS Series*

Continuous Hinge Door with Handle

Quick Link: hammfg.com/HN4FMSS

Application

- Designed to house electrical, electronic, hydraulic or pneumatic controls and instruments.
- Provides protection where equipment may be hosed down or otherwise be very wet, or in specific applications where corrosion is a serious problem.

Construction

- Formed 12 gauge 304 or 316 stainless steel.
- Smooth, continuously welded seams without knockouts, cutouts or holes.
- Heavy duty stainless steel lifting eyebolts are provided with reinforcing support angles.
- Doors are supported with heavy gauge continuous hinges.
- New 3-pt padlocking door handle.
- Seamless poured-in place gasket.
- A grounding stud is provided in the enclosure and a bonding stud is provided on the door.
- Center post is removable for easy installation of the inner panel.
- 12” floor stands are welded to the enclosure.

Standards

- UL 508A Type 3R, 4X and 12
- CSA Type 3R, 4X and 12
- Complies with:
  - NEMA Type 3R, 4X, 12 and 13
  - IEC 60529, IP66

Finish

- Cover and enclosure are natural stainless steel with a smooth brushed finish.
- Removable 10 gauge inner panel is finished in white powder coating.

Accessories

- Additional Inner Panels...*See Page* ***283***
- Door Stop Kit...*See Page* ***304***
- Barrier Kits for Type 4 Floormount...*See Page* ***312***
- Mechanical Interlock...*See Page* ***280***
- Drip Shield Kit...*See Page* ***303***
- Type 12/4, 4X Handle Kits...*See Page* ***270***
- Window Kits...*See Page* ***294***
- Climate Control...*See Page* ***234***
- Lighting...*See Page* ***298***
- General Accessories...*See Page* ***268***

304 S.S.	316 S.S.	Enclosure			Panel	
Part Number	Part Number	H	W	D	H	W
HN4FM604812SS	HN4FM604812S16	60.13	48.06	12.69	56.00	44.00
HN4FM604818SS	HN4FM604818S16	60.13	48.06	18.69	56.00	44.00
HN4FM606012SS	HN4FM606012S16	60.13	60.06	12.69	56.00	56.00
HN4FM606018SS	HN4FM606018S16	60.13	60.06	18.69	56.00	56.00
HN4FM726012SS	HN4FM726012S16	72.13	60.06	12.69	68.00	56.00
HN4FM726018SS	HN4FM726018S16	72.13	60.06	18.69	68.00	56.00
HN4FM727212SS	HN4FM727212S16	72.13	72.06	12.69	68.00	68.00
HN4FM727218SS	HN4FM727218S16	72.13	72.06	18.69	68.00	68.00
HN4FM727224SS	HN4FM727224S16	72.13	72.06	24.69	68.00	68.00

Distributed by Grass Automation | +1 (262) 252-1602 | hammondsales@grossautomation.com

Technical references and CAD downloads available at www.hammondmfg.com

All dimensions in inches unless specified otherwise

Quality Products. Service Excellence.
© Hammond Manufacturing
Canada: 519.822.2960 or 905.456.3770 USA: 716.630.7030
Data Subject to change without notice

Type 4X Stainless Steel Freestanding Enclosure *1418 N4 FS SS Series*

Continuous Hinge Door with Clamps

Quick Link: hammfg.com/1418N4FSSS

Application

- Designed to house electrical, electronic, hydraulic or pneumatic controls with provision for panel mounting or rack mounting of equipment.
- Provides protection where equipment may be hosed down or otherwise be very wet, or in specific applications where corrosion is a serious problem.
- A variety of inner panels, rack mounting rails and swing out frames are available to provide flexibility in mounting arrangements.

Standards

- UL 508A Type 3R, 4, 4X and 12
- CSA Type 3R, 4, 4X and 12
- Complies with
  - NEMA Type 3R, 4, 4X, 12 and 13
  - IEC 60529, IP66

Construction

- Formed 12 gauge 304 or 316 stainless steel.
- Smooth, continuously welded seams without knockouts, cutouts or holes.
- Heavy duty stainless steel lifting eyebolts are provided with reinforcing support angles.
- Doors are supported with heavy gauge continuous hinges.
- Doors are secured with heavy duty stainless steel clamps.
- Seamless poured-in place gasket.
- Mounting channels are welded on the inside of the enclosure for mounting of optional inner panels or rack equipment rails.
- A grounding stud is provided in the enclosure and a bonding stud is provided on the door.

Finish

- Cover and enclosure are natural stainless steel with a smooth brushed finish.
- Optional inner panels are finished in white powder paint.

Accessories

- Inner Panels...*See Page* **286**
- Panel Rails...*See Page* **293**
- Swing Out Frames...*See Page* **292**
- Door Stop Kit...*See Page* **304**
- Drip Shield Kit...*See Page* **303**
- Door Clamping Hardware...*See Page* **268**
- Climate Control...*See Page* **234**
- Window Kits...*See Page* **294**
- Lighting...*See Page* **298**
- General Accessories...*See Page* **268**

304 S.S. Part No.	316 S.S. Part No.	Enclosure H	W	D	Optional Full Size Inner Panel
1418N4SSW18	1418N4S16W18	72.06	25.06	18.06	72WFW
1418N4SSX24	1418N4S16X24	72.06	31.06	24.06	72XFW
1418N4SSY24	1418N4S16Y24	72.06	37.06	24.06	72YFW

Alternative inner panel options also available.

Distributed by Gross Automation | +1 (262) 252-1600. | hammondsales@grossautomation.com

Technical references and CAD downloads available at www.hammondmfg.com

All dimensions in inches unless specified otherwise

© Hammond Manufacturing

Type 4X Stainless Steel Freestanding Enclosure *HN4 FS SS Series*

Continuous Hinge Door with Handle

Quick Link: hammfg.com/HN4FSSS

Application

- Designed to house electrical, electronic, hydraulic or pneumatic controls with provision for panel mounting or rack mounting of equipment.
- Provides protection where equipment may be hosed down or otherwise be very wet, or in specific applications where corrosion is a serious problem.
- A variety of inner panels, rack mounting rails and swing out frames are available to provide flexibility in mounting arrangements.

Construction

- Formed 12 gauge 304 stainless steel.
- Smooth, continuously welded seams without knockouts, cutouts or holes.
- Heavy duty stainless steel lifting eyebolts are provided with reinforcing support angles.
- Doors are supported with heavy gauge continuous hinges.
- New 3-pt padlocking door handle.
- Seamless poured-in place gasket.
- A grounding stud is provided in the enclosure and a bonding stud is provided on the door.
- Mounting channels are welded on the inside of the enclosure for mounting of optional inner panels or rack equipment rails.

Standards

- UL 508A Type 3R, 4X and 12
- CSA Type 3R, 4X and 12
- Complies with:
  - NEMA Type 3R, 4X, 12 and 3
  - IEC 60529, IP66

Finish

- Cover and enclosure are natural stainless steel with a smooth brushed finish.
- Optional inner panels are finished in white powder paint.

Accessories

- Inner Panels...*See Page* ***286***
- Panel Rails...*See Page* ***293***
- Swing Out Frames...*See Page* ***292***
- Door Stop Kit...*See Page* ***304***
- Drip Shield Kit...*See Page* ***303***
- Type 12/4, 4X Handle Kits...*See Page* ***270***
- Window Kits...*See Page* ***294***
- Climate Control...*See Page* ***234***
- Lighting...*See Page* ***298***
- General Accessories...*See Page* ***268***

Distributed by Gross Automation | +1 (262) 252-1600. | hammondsales@grossautomation.com

Technical references and CAD downloads available at www.hammondmfg.com

All dimensions in inches unless specified otherwise

Quality Products. Service Excellence.

© Hammond Manufacturing

Canada: 519.822.2960 or 905.456.3770 USA: 716.630.7030

Data Subject to change without notice

Type 4X Stainless Steel Freestanding Enclosure *HN4 FS SS Series*

Continuous Hinge Door with Handle

Single Access

304 S.S. Part No.	316 S.S. Part No.	Enclosure H	W	D	Optional Full Size Panel
HN4FS602418SS	HN4FS602418S16	60.06	24.06	18.06	60TWFW
HN4FS722418SS	HN4FS722418S16	72.06	24.06	18.06	72WFW
HN4FS723018SS	HN4FS723018S16	72.06	30.06	18.06	72XFW
HN4FS723618SS	HN4FS723618S16	72.06	36.06	18.06	72YFW
HN4FS902420SS	HN4FS902420S16	90.06	24.06	20.06	90YWFW
HN4FS903620SS	HN4FS903620S16	90.06	36.06	20.06	90YFW
HN4FS603624SS	HN4FS603624S16	60.06	36.06	24.06	60TYFW
HN4FS722424SS	HN4FS722424S16	72.06	24.06	24.06	72WFW
HN4FS723024SS	HN4FS723024S16	72.06	30.06	24.06	72XFW
HN4FS723624SS	HN4FS723624S16	72.06	36.06	24.06	72YFW
HN4FS903624SS	HN4FS903624S16	90.06	36.06	24.06	90YFW
HN4FS723630SS	HN4FS723630S16	72.06	36.06	30.06	72YFW
HN4FS723636SS	HN4FS723636S16	72.06	36.06	36.06	72YFW
HN4FS903636SS	HN4FS903636S16	90.06	36.06	36.06	90YFW

Alternative inner panel options also available.

Dual Access

304 S.S. Part No.	316 S.S. Part No.	Enclosure H	W	D	Optional Full Size Inner Panel
HN4FS722424DASS	HN4FS722424DS16	72.06	24.06	24.06	72WFW
HN4FS723024DASS	HN4FS723024DS16	72.06	30.06	24.06	72XFW
HN4FS723624DASS	HN4FS723624DS16	72.06	36.06	24.06	72YFW
HN4FS903624DASS	HN4FS903624DS16	90.06	36.06	24.06	90YFW
HN4FS722430DASS	HN4FS722430DS16	72.06	24.06	30.06	72WFW
HN4FS722436DASS	HN4FS722436DS16	72.06	24.06	36.06	72WFW
HN4FS723636DASS	HN4FS723636DS16	72.06	36.06	36.06	72YFW
HN4FS903636DASS	HN4FS903636DS16	90.06	36.06	36.06	90YFW

Alternative inner panel options also available.

© Hammond Manufacturing

Type 4X Stainless Steel Freestanding Enclosure *1418 N4 FS QT SS Series*

Continuous Hinge Door with Quarter Turn

Quick Link: hammfg.com/1418N4FSQTSS

Application

- Designed to house electrical, electronic, hydraulic or pneumatic controls with provision for panel mounting or rack mounting of equipment.
- Provides protection where equipment may be hosed down or otherwise be very wet, or in specific applications where corrosion is a serious problem.
- A variety of inner panels, rack mounting rails and swing out frames are available to provide flexibility in mounting arrangements.

Standards

- UL 508A Type 3R, 4, 4X and 12
- CSA Type 3R, 4, 4X and 12
- Complies with
  - NEMA Type 3R, 4, 4X, 12 and 13
  - IEC 60529, IP66

Construction

- Formed 12 gauge 304 or 316 stainless steel.
- Smooth, continuously welded seams without knockouts, cutouts or holes.
- Heavy duty stainless steel lifting eyebolts are provided with reinforcing support angles.
- Doors are supported with heavy gauge continuous hinges.
- Doors are secured with quarter turn latches.
- Seamless poured-in place gasket.
- Mounting channels are welded on the inside of the enclosure for mounting of optional inner panels or rack equipment rails.
- A grounding stud is provided in the enclosure and a bonding stud is provided on the door.

Finish

- Cover and enclosure are natural stainless steel with a smooth brushed finish.
- Optional inner panels are finished in white powder paint.

Accessories

- Inner Panels...*See Page* ***286***
- Panel Rails...*See Page* ***293***
- Swing Out Frames...*See Page* ***292***
- Door Stop Kit...*See Page* ***304***
- Drip Shield Kit...*See Page* ***303***
- Quarter Turn Inserts and Keys...*See Page* ***273***
- Climate Control...*See Page* ***234***
- Window Kits...*See Page* ***294***
- Lighting...*See Page* ***298***
- General Accessories...*See Page* ***268***

304 S.S. Part No.	316 S.S. Part No.	Enclosure H	W	D	Optional Full Size Inner Pannel
1418N4SSW18QT	**1418N4S16W18QT**	72.06	25.06	18.06	**72WFW**
1418N4SSX24QT	**1418N4S16X24QT**	72.06	31.06	24.06	**72XFW**
1418N4SSY24QT	**1418N4S16Y24QT**	72.06	37.06	24.06	**72YFW**

Alternative inner panel options also available.

Distributed by: Gross Automation | +1 (262) 252-1600. | hammondsales@grossautomation.com

Technical references and CAD downloads available at www.hammondmfg.com

All dimensions in inches unless specified otherwise

Quality Products. Service Excellence.
© Hammond Manufacturing
Canada: 519.822.2960 or 905.456.3770 USA: 716.630.7030
Data Subject to change without notice

© Hammond Manufacturing

Aluminum Enclosures (Type 4X)

Type 4X Aluminum Junction Box
Eclipse Junior Series
Continuous Hinge Door with Quarter Turn..... 69

Type 4X Aluminum Junction Box
1414 N4 AL Series
Lift-Off Cover with Clamps..... 70

Type 4X/6P Diecast Aluminum Enclosures
1590Z Series
Watertight, Thick Wall, UL Listed..... 71

Type 4X Diecast Aluminum Enclosures
R100 Series
Watertight, Thick Wall..... 73

Type 4X Aluminum Wallmount Enclosure
1418 N4 AL Series
Continuous Hinge Door with Clamps..... 75

© Hammond Manufacturing

Type 4X Aluminum Junction Box *Eclipse Junior Series*

Continuous Hinge Door with Quarter Turn

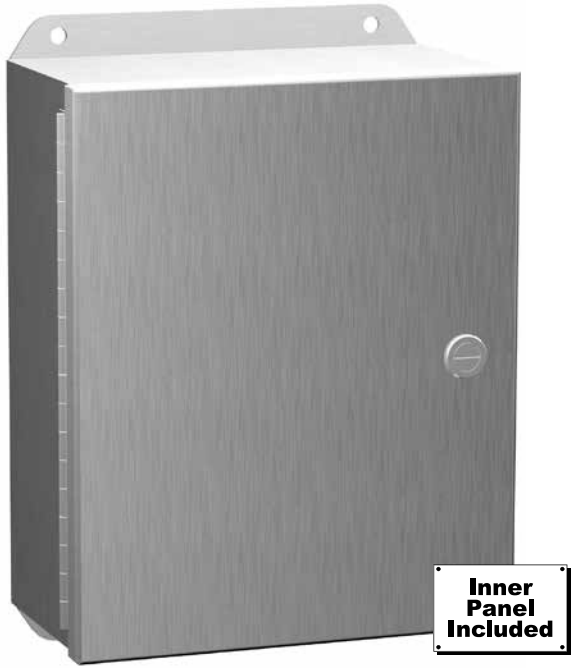

Quick Link: hammfg.com/EJAL

Application

- Designed for use as instrument enclosures, electric, hydraulic or pneumatic control housings, electrical junction boxes or terminal wiring enclosures.
- Provides protection where equipment may be hosed down or otherwise be very wet, or in specific applications where corrosion may be a problem.

Standards

- UL 508A Type 3R, 4, 4X, 12, and 13
- CSA Type 3R, 4, 4X, 12, and 13
- Complies with
  - NEMA Type 3R, 4, 4X, 12 and 13
  - IEC 60529, IP66

Construction

- Formed from 0.08" Type 5052 H-32 aluminum.
- Smooth, continuously welded seams without knockouts, cutouts, or holes.
- Formed lip on enclosure to exclude flowing liquids and contaminants.
- Welded brackets provide for enclosure mounting.
- Continuously hinged cover has aluminum hinge and provides 180° opening.
- Door latches feature the added safety of quarter turn slot requiring use of tool for opening.
- Quarter turn latches formed from 316 stainless steel.
- Seamless poured-in place gasket.
- Models larger than 4"x4" include a removable 14 gauge galvanized inner panel.
- Tapped studs are provided for mounting inner panels.
- A bonding stud is provided on the door and a grounding stud is provided on the enclosure.
- Grounding and panel mounting hardware provided.

Finish

- Cover and enclosure are natural unfinished aluminum.
- Removable inner panel is unpainted galvanized steel.

Accessories

- Additional Inner Panels...*See Page* ***280***
- Swing Panel Kit...*See Page* ***288***
- Terminal Kit Assemblies...*See Page* ***288***
- Padlock Adaptor...*See Page* ***272***
- Quarter Turn Assemblies...*See Page* ***273***
- Climate Control...*See Page* ***234***
- General Accessories...*See Page* ***268***

	Enclosure			Panel	
Part No.	H	W	D	H	W
EJ443AL	4.00	4.00	3.00	N/A	N/A
EJ643AL	6.00	4.00	3.00	4.88	2.88
EJ863AL	8.00	6.00	3.50	6.75	4.88
EJ444AL	4.00	4.00	4.00	N/A	N/A
EJ644AL	6.00	4.00	4.00	4.88	2.88
EJ664AL	6.00	6.00	4.00	4.88	4.88
EJ884AL	8.00	8.00	4.00	6.75	6.88
EJ1084AL	10.00	8.00	4.00	8.75	6.88
EJ1264AL	12.00	6.00	4.00	10.75	4.88
EJ12124AL	12.00	12.00	4.00	10.75	10.88
EJ12105AL	12.00	10.00	5.00	10.75	8.88
EJ866AL	8.00	6.00	6.00	6.75	4.88
EJ1086AL	10.00	8.00	6.00	8.75	6.88
EJ10106AL	10.00	10.00	6.00	8.75	8.88
EJ12106AL	12.00	10.00	6.00	10.75	8.88
EJ12126AL	12.00	12.00	6.00	10.75	10.88
EJ14126AL	14.00	12.00	6.00	12.75	10.88
EJ16146AL	16.00	14.00	6.00	14.75	12.88
EJ12108AL	12.00	10.00	8.00	10.75	8.88
EJ14128AL	14.00	12.00	8.00	12.75	10.88
EJ16148AL	16.00	14.00	8.00	14.75	12.88
EJ161410AL	16.00	14.00	10.00	14.75	12.88

Distributed by Gross Automation | +1 (262) 252-1600. | hammondsales@grossautomation.com

Technical references and CAD downloads available at www.hammondmfg.com

All dimensions in inches unless specified otherwise

© Hammond Manufacturing

Canada: 519.822.2960 or 905.456.3770 USA: 716.630.7030

Data Subject to change without notice

Type 4X Aluminum Junction Box *1414 N4 AL Series*

Lift-Off Cover with Clamps

Quick Link: hammfg.com/1414N4AL

Application

- Designed for use as instrument enclosures, electric, hydraulic or pneumatic control housings, electrical junction boxes or terminal wiring enclosures.
- Provides protection where equipment may be hosed down or otherwise be very wet, or in specific applications where corrosion is a problem.

Standards

- UL 508A Type 4, 4X, 12 and 13
- CSA Type 4, 4X, 12 and 13
- Complies with
  - NEMA Type 4, 4X, 12 and 13
  - IEC 60529, IP66

Construction

- Formed from 0.08" Type 5052 H-32 aluminum.
- Smooth, continuously welded seams without knockouts, cutouts or holes.
- Welded brackets provide for enclosure mounting.
- Cover is secured with easily operated aluminum clamps.
- Seamless poured-in place gasket.
- All models larger than 4" x 4" include a removable 14 gauge inner panel.
- Tapped studs are provided for mounting inner panels.
- A bonding stud is provided on the door and a grounding stud is provided in the enclosure.

Finish

- Cover and enclosure are natural unfinished aluminum.
- Removable inner panel is finished in white powder coating.

Accessories

- Additional Inner Panels...*See Page* ***280***
- Swing Panel Kit...*See Page* ***288***
- Door Clamping Hardware...*See Page* ***268***
- Terminal Kit Assemblies...*See Page* ***288***
- Climate Control...*See Page* ***234***
- General Accessories...*See Page* ***268***

	Enclosure			Panel	
Part No.	H	W	D	H	W
1414N4ALA	4.00	4.00	3.00	-	-
1414N4ALC	6.00	4.00	3.00	4.88	2.88
1414N4ALE	6.00	6.00	4.00	4.88	4.88
1414N4ALG	8.00	6.00	3.50	6.75	4.88
1414N4ALI	10.00	8.00	4.00	8.75	6.88
1414N4ALK	12.00	10.00	5.00	10.75	8.88
1414N4ALM6	14.00	12.00	6.00	12.75	10.88
1414N4ALO6	16.00	14.00	6.00	14.75	12.88
1414N4ALM8	14.00	12.00	8.00	12.75	10.88
1414N4ALO10	16.00	14.00	10.00	14.75	12.88

Distributed by Gross Automation | +1 (262) 252-1600. | hammondsales@grossautomation.com

Technical references and CAD downloads available at www.hammondmfg.com

All dimensions in inches unless specified otherwise

Quality Products. Service Excellence.
© Hammond Manufacturing
Canada: 519.822.2960 or 905.456.3770 USA: 716.630.7030
Data Subject to change without notice

Type 4X/6P Diecast Aluminum Enclosures *1590Z Series*

Watertight, Thick Wall, UL Listed

Quick Link: hammfg.com/1590Z

Application

- Rugged, diecast aluminum alloy (tough yet easy to machine), electronic instrument enclosure.

Standards

- Designed to meet IP68.
- North American Mark of Safety - cUL & UL listed. Certified to Type 4, 4X, 6, 6P.

Construction

- Two piece “tongue & groove” construction with a one piece silicone rubber gasket provides protection against access of dust and water.
- Four recessed stainless steel machine screws secure lid into tapped holes. Ideal for repetitive opening and closing.
- Easy to wall mount using “through box - blind hole” construction, outside of gasket protection.
- Lid screws are self captivating (lid holes are threaded with the first installation of lid screws). (NOTE: Except for 1590Z060, 1590Z061, 1590Z062, and 1590Z063)

Finish

- Unpainted versions are a natural aluminum finish.
- Painted versions are painted inside and out with a tough powder paint. Choice of satin black or smooth grey (RAL 7001).

Accessories

- Pressure Compensation Plug...*See Page* ***259***
- Breather Kit...*See Page* ***260***
- Small Rainproof Ventilator...*See Page* ***259***
- Liquid-Tight, Strain Relief Cordgrips...*See Page* ***308***

Part Number	Color	Internal Mounting Shelf	Enclosure H	Enclosure W	Enclosure D (Less Lid)	Optional Inner Panel
1590Z060	Natural	NO	1.98	1.77	0.95	
1590Z060BK	Black	NO	1.98	1.77	0.95	
1590Z060GY	Grey	NO	1.98	1.77	0.95	
1590Z061	Natural	NO	2.51	2.29	1.03	
1590Z061BK	Black	NO	2.51	2.29	1.03	
1590Z061GY	Grey	NO	2.51	2.29	1.03	
1590Z100	Natural	YES	2.94	3.14	1.57	**1590Z100PL**
1590Z100BK	Black	YES	2.94	3.14	1.57	**1590Z100PL**
1590Z100GY	Grey	YES	2.94	3.14	1.57	**1590Z100PL**
1590Z110	Natural	NO	2.94	3.14	1.57	
1590Z110BK	Black	NO	2.94	3.14	1.57	
1590Z110GY	Grey	NO	2.94	3.14	1.57	
1590Z062	Natural	NO	3.86	2.52	1.03	
1590Z062BK	Black	NO	3.86	2.52	1.03	
1590Z062GY	Grey	NO	3.86	2.52	1.03	
1590Z119	Natural	YES	4.80	4.72	2.36	**1590Z119PL**
1590Z119BK	Black	YES	4.80	4.72	2.36	**1590Z119PL**
1590Z119GY	Grey	YES	4.80	4.72	2.36	**1590Z119PL**
1590Z120	Natural	YES	4.90	3.15	1.75	**1590Z120PL**
1590Z120BK	Black	YES	4.90	3.15	1.75	**1590Z120PL**
1590Z120GY	Grey	YES	4.90	3.15	1.75	**1590Z120PL**

Distributed by Gross Automation | +1 (262) 252-7000. | hammondsales@grossautomation.com

Technical references and CAD downloads available at www.hammondmfg.com

All dimensions in inches unless specified otherwise

© Hammond Manufacturing

Type 4X/6P Diecast Aluminum Enclosures *1590Z Series*

Watertight, Thick Wall, UL Listed

Part Number	Color	Internal Mounting Shelf	Enclosure H	Enclosure W	Enclosure D (Less Lid)	Optional Inner Panel
1590Z063	Natural	NO	5.89	2.51	1.03	
1590Z063BK	Black	NO	5.89	2.51	1.03	
1590Z063GY	Grey	NO	5.89	2.51	1.03	
1590Z160	Natural	YES	6.30	6.30	2.76	**1590Z160PL**
1590Z160BK	Black	YES	6.30	6.30	2.76	**1590Z160PL**
1590Z160GY	Grey	YES	6.30	6.30	2.76	**1590Z160PL**
1590Z130	Natural	NO	6.91	3.15	1.65	
1590Z130BK	Black	NO	6.91	3.15	1.65	
1590Z130GY	Grey	NO	6.91	3.15	1.65	
1590Z135	Natural	NO	6.91	3.15	1.65	
1590Z135BK	Black	NO	6.91	3.15	1.65	
1590Z135GY	Grey	NO	6.91	3.15	1.65	
1590Z150	Natural	YES	8.70	4.74	2.39	**1590Z150PL**
1590Z150BK	Black	YES	8.70	4.74	2.39	**1590Z150PL**
1590Z150GY	Grey	YES	8.70	4.74	2.39	**1590Z150PL**
1590Z155	Natural	YES	8.70	4.72	2.40	**1590Z150PL**
1590Z155BK	Black	YES	8.70	4.72	2.40	**1590Z150PL**
1590Z155GY	Grey	YES	8.70	4.72	2.40	**1590Z150PL**
1590Z231	Natural	YES	9.06	7.87	3.63	**1590Z231PL**
1590Z231BK	Black	YES	9.06	7.87	3.63	**1590Z231PL**
1590Z231GY	Grey	YES	9.06	7.87	3.63	**1590Z231PL**
1590Z140	Natural	YES	9.85	3.13	1.57	**1590Z140PL**
1590Z140BK	Black	YES	9.85	3.13	1.57	**1590Z140PL**
1590Z140GY	Grey	YES	9.85	3.13	1.57	**1590Z140PL**
1590Z162	Natural	YES	10.24	6.25	2.75	**1590Z162PL**
1590Z162BK	Black	YES	10.24	6.25	2.75	**1590Z162PL**
1590Z162GY	Grey	YES	10.24	6.25	2.75	**1590Z162PL**
1590Z235	Natural	YES	13.07	9.13	4.36	**1590Z235PL**
1590Z235BK	Black	YES	13.07	9.13	4.36	**1590Z235PL**
1590Z235GY	Grey	YES	13.07	9.13	4.36	**1590Z235PL**
1590Z166	Natural	YES	14.17	6.30	2.76	**1590Z166PL**
1590Z166BK	Black	YES	14.17	6.30	2.76	**1590Z166PL**
1590Z166GY	Grey	YES	14.17	6.30	2.76	**1590Z166PL**
1590Z164	Natural	YES	14.23	4.72	2.38	**1590Z164PL**
1590Z164BK	Black	YES	14.23	4.72	2.38	**1590Z164PL**
1590Z164GY	Grey	YES	14.23	4.72	2.38	**1590Z164PL**

Distributed by Gross Automation | +1 (262) 252-1600. | hammondsales@grossautomation.com

Technical references and CAD downloads available at www.hammondmfg.com

All dimensions in inches unless specified otherwise

Quality Products. Service Excellence.
© Hammond Manufacturing
Canada: 519.822.2960 or 905.456.3770 USA: 716.630.7030
Data Subject to change without notice

Type 4X Diecast Aluminum Enclosures *R100 Series*

Watertight, Thick Wall

Quick Link: hammfg.com/R100

Application

- Designed for use as electronic instrument enclosure, electrical junction box, or terminal wiring enclosure.

Standards

- Degree of protection NEMA 4X, IP66, DIN 40050
- CSA certified, UL Listed, Type 4, for use with industrial control equipment.

Construction

- Material - Aluminum die-cast: G AI SI 12 / DIN 1775
- Shallow lid, deep body
- Captive stainless steel lid screws. Lid screws and mounting holes outside of the gasket seal.
- Space saving single channel mounting (ie...same hole used for mounting enclosure through rear and also for the lid), provides larger interior space than dual channel enclosures.
- Enclosure holes threaded for easy installation and repetitive assembly & disassembly.
- Internal mounting shelves placed along both sides of enclosure include blind holes and grounding screws.
- Special developed external mounting feet made from zinc-die-cast. Can be turned through 90º. The fastening holes have engagement lugs for this purpose. (See table)
- All sizes have inner blind holes.
- Neoprene oil and petrol resistant gasket standard. (-40ºC up to +80ºC)
- An inner mounting panel - made of zinc-plated steel is also available (See table)

Finish

- Textured polyester powder coat, light grey RAL7032. (can be supplied unpainted on special order)

Distributed by Gross Automation | +1 (262) 252-1600. | hammondsales@grossautomation.com

Technical references and CAD downloads available at www.hammondmfg.com

All dimensions in inches unless specified otherwise

© Hammond Manufacturing

Canada: 519.822.2960 or 905.456.3770 USA: 716.630.7030

Data Subject to change without notice

Type 4X Diecast Aluminum Enclosures *R100 Series*

Watertight, Thick Wall

		Enclosure		Optional Accessories		
				Foot Kit	Inner Panel	Hinge Kit
Part No.	H	W	D (Including Lid)	Part No.	Part No.	Part No.
R100-060-000	50	65	40	N/A	N/A	N/A
R100-062-000	65	65	40	N/A	**R507-062-000**	N/A
R100-064-000	100	65	40	N/A	**R507-064-000**	N/A
R100-066-000	150	65	40	N/A	**R507-066-000**	N/A
R100-080-000	80	80	60	**R501-002-080**	**R507-080-000**	N/A
R100-082-000	120	80	60	**R501-002-080**	**R507-082-000**	N/A
R100-084-000	160	80	60	**R501-002-080**	**R507-084-000**	N/A
R100-100-000	100	100	80	**R501-002-100**	**R507-100-000**	N/A
R100-102-000	150	100	80	**R501-002-100**	**R507-102-000**	**R510-000-000**
R100-104-000	200	100	80	**R501-002-100**	**R507-104-000**	**R510-000-000**
R100-120-000	120	120	100	**R501-000-011**	**R507-120-000**	**R510-000-000**
R100-122-000	180	120	100	**R501-000-011**	**R507-122-000**	**R510-000-000**
R100-124-000	240	120	100	**R501-000-011**	**R507-124-000**	**R510-000-000**
R100-160-000	160	160	100	**R501-000-012**	**R507-160-000**	**R510-000-000**
R100-162-000	240	160	100	**R501-000-012**	**R507-162-000**	**R510-000-000**
R100-164-000	320	160	100	**R501-000-012**	**R507-164-000**	**R510-000-000**
R100-166-000	480	160	100	**R501-000-012**	**R507-166-000**	**R510-000-000**
R100-200-000	200	200	120	N/A	**R507-200-000**	**R510-000-000**
R100-202-000	300	200	120	N/A	**R507-202-000**	**R510-000-000**
R100-204-000	400	200	120	N/A	**R507-204-000**	**R510-000-000**
R100-240-000	240	240	120	N/A	**R507-240-000**	**R510-000-000**
R100-242-000	360	240	120	N/A	**R507-242-000**	**R510-000-000**
R100-244-000	480	240	120	N/A	**R507-244-000**	**R510-000-000**
R100-320-000	320	320	120	N/A	**R507-320-000**	**R510-000-000**
R100-322-000	480	320	120	N/A	**R507-322-000**	**R510-000-000**
R100-324-000	640	320	120	N/A	**R507-324-000**	**R510-000-000**

Note: Table dimensions in mm.

Distributed by Gross Automation | +1 (262) 252-1600. | hammondsales@grossautomation.com

Technical references and CAD downloads available at www.hammondmfg.com

All dimensions in inches unless specified otherwise

Quality Products. Service Excellence.
© Hammond Manufacturing
Canada: 519.822.2960 or 905.456.3770 USA: 716.630.7030
Data Subject to change without notice

Type 4X Aluminum Wallmount Enclosure *1418 N4 AL Series*

Continuous Hinge Door with Clamps

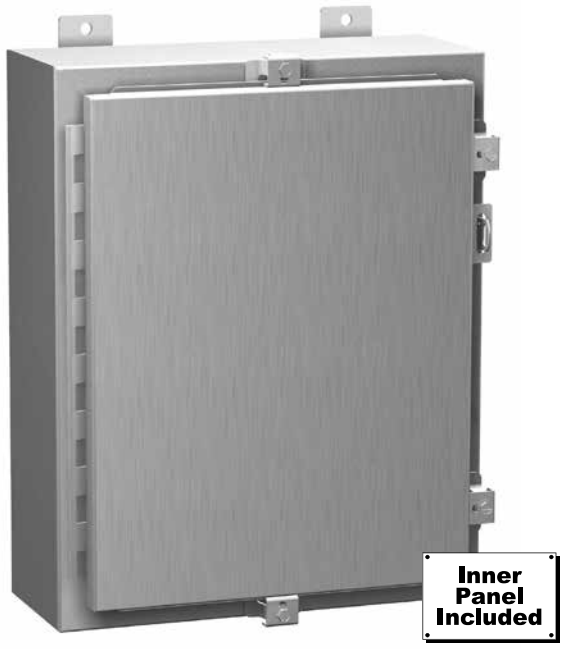

Quick Link: hammfg.com/1418N4AL

Application

- Designed for use as instrument enclosures, electric, hydraulic or pneumatic control housings, electrical junction boxes or terminal wiring enclosures.
- Provides protection where equipment may be hosed down or otherwise be very wet, or in specific applications where corrosion may be a problem.

Standards

- UL 508A Type 4, 4X, 12 and 13
- CSA Type 4, 4X, 12 and 13
- Complies with
  - NEMA Type 4, 4X, 12 and 13
  - IEC 60529, IP66

Construction

- Formed from 0.081" (Body) / 0.100" (Door) Type 5052 H-32 aluminum.
- Smooth, continuously welded seams without knockouts, cutouts or holes.
- Door and body stiffeners are provided in the larger enclosures for extra rigidity.
- Welded brackets provide for enclosure mounting.
- Formed lip on door and enclosure excludes flowing liquids and contaminants.
- Aluminum continuous hinge on door may be removed by pulling the aluminum hinge pin.
- Door is secured with easily operated aluminum clamps.
- Provision for padlocking.
- Seamless poured-in place gasket.
- A removable 12 gauge steel inner panel is included.
- Collar studs are provided for mounting inner panels.
- A bonding stud is provided on the door and a grounding stud is provided in the enclosure.
- A literature pocket is provided for the inside of the door.

Finish

- Cover and enclosure are natural unfinished aluminum.
- Removable inner panel is finished in white powder coating.

Accessories

- Additional Inner Panels...*See Page* ***281***
- Perforated Inner Panels...*See Page* ***285***
- Door Stop Kit...*See Page* ***304***
- Door Clamping Hardware...*See Page* ***268***
- Window Kits...*See Page* ***294***
- Lock kit...*See Page* ***271***
- Climate Control...*See Page* ***234***
- Lighting...*See Page* ***298***
- General Accessories...*See Page* ***268***

	Enclosure			Panel	
Part No.	H	W	D	H	W
1418N4ALB6	16.00	12.00	6.00	13.00	9.00
1418N4ALC6	20.00	16.00	6.00	17.00	13.00
1418N4ALE6	24.00	20.00	6.00	21.00	17.00
1418N4ALJ8	24.00	24.00	8.00	21.00	21.00
1418N4ALK8	30.00	24.00	8.00	27.00	21.00
1418N4ALM8	36.00	30.00	8.00	33.00	27.00
1418N4ALS8	48.00	36.00	8.00	45.00	33.00
1418N4ALC10	20.00	16.00	10.00	17.00	13.00
1418N4ALE10	24.00	20.00	10.00	21.00	17.00
1418N4ALK12	30.00	24.00	12.00	27.00	21.00
1418N4ALM12	36.00	30.00	12.00	33.00	27.00
1418N4ALT12	60.00	36.00	12.00	57.00	33.00

Distributed by Gross Automation | +1 (262) 252-1600. | hammondsales@grossautomation.com

Technical references and CAD downloads available at www.hammondmfg.com

All dimensions in inches unless specified otherwise

© Hammond Manufacturing

Non-Metallic Enclosures (Type 4X)

Type 4X, 6P Polycarbonate Enclosures
1554 Series
Watertight, Flat Lid, UL Listed Options 78

Type 4X, 6P Enclosures
1555F Series
Watertight, Flanged Lid, UL Listed Options 79

Water-Tight Polyester
R130-131-132 Series
PolyTOP & PolyDOOR 80

Type 4, 4X Glass Reinforced Polyester Enclosures
1590ZGRP Series
Watertight, Thick Wall, NEMA 4X, IP65, UL Listed 81

Type 4, 4X Polyester Inline Enclosure
PJI Series 82

Type 4X Polyester Junction Box
PJ Series
Lift-Off Cover/Hinged Door with Screws 83

Type 4X Polyester Junction Box
PJ Series
Continuous Hinge Door with Twist/Snap Latches 84

Type 4X Polyester Junction Box w/ Window
PJ Series
Various Door Styles 85

Type 4X Polyester Junction Box w/ Raised Lid (Solid and Window)
PJ Series
Lift-Off Cover/Hinged Door with Screws 86

Type 4X Polyester Junction Box w/ Raised Lid (Solid and Window)
PJ Series
Continuous Hinge Door with Snap Latches 87

Type 4X Polyester Junction Box w/ Raised Lid (Solid and Window)
PJ Series
Continuous Hinge Door with Twist Latches 88

Type 4X Polyester Junction Box (Solid and Clear Cover)
PJU Series
Continuous Hinge Door with Snap Latches 89

Type 4X Polyester Junction Box (Solid and Clear Cover)
PJU Series
Continuous Hinge Door with Twist Latches 90

Type 4X Polyester Junction Box (Solid and Clear Cover)
PJU Series
Lift-Off Cover with Screws 91

Type 4X Polyester Junction Box (Solid and Clear Cover)
PJU Series
Continuous Hinge Door with Screws 92

Type 4X Polyester Junction Box w/ Window
PJU Series
Various Door Styles 93

Type 4X Polycarbonate Junction Box (Solid and Clear Cover)
PCJ Series
Screw Cover 94

Type 4X Polycarbonate Junction Box (Solid and Clear Cover)
PCJ Series
Hinged Screw Cover 95

Type 4X Polycarbonate Junction Box (Solid and Clear Cover)
PCJ Series
Non-Metallic Latch Cover 96

Type 4X Polycarbonate Junction Box (Solid and Clear Cover)
PCJ Series
Metal Latch Cover 97

Type 4X Fiberglass Junction Box
PJHD Series
Heavy Duty PJ Snap Latch 98

Type 4X Polyester Wallmount Enclosure
PJW Series
Continuous Hinge Door with Twist Latches and 3 Pt Handle 99

© Hammond Manufacturing

Non-Metallic Enclosures (Type 4X)

Type 4X Polyester Wallmount Enclosure
PHW Series
Continuous Hinge Door with Twist Latches 100

Type 4X Polyester Single/Two Door Freestanding Enclosure
PJFS Series
Continuous Hinge Door with Handle 101

© Hammond Manufacturing

Type 4X, 6P Polycarbonate Enclosures *1554 Series*

Watertight, Flat Lid, UL Listed Options

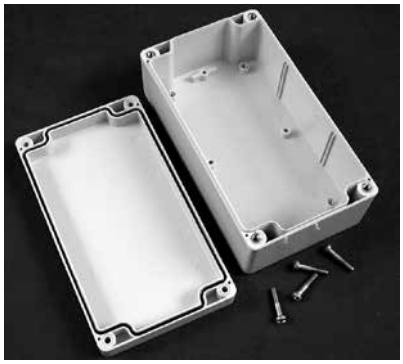

Quick Link: hammfg.com/1554

Application

- Ideally suited for mounting printed circuit boards or DIN rail mounted components.

Standards

- Designed to meet NEMA Type 4, 4X, 6, 6P, 12 & 13 ratings which meet and exceed IP ratings up to and including IP68. (Except 1554 V size which is 4,4X only)
- cUL and UL 508A listed (File # E65324).
- UV stabilized for outdoor use. Gray polycarb carries a UL94-5VA rating, while clear and smoked lids carry a UL94V-0 rating.

Construction

- Available with gray, clear, or smoked lid.
- Gasketed lid with two piece "tongue & groove" construction provides protection against access of oil, dust and water.
- Gasket is one piece made from high temperature, U.L. listed silicone.
- Wall-mounting holes are located outside of the gasket channel.
- Same wall mounting holes can be used to install an accessory foot kit, 1554FT
- Lid is secured with included M4 stainless steel machine screws which are threaded into integral stainless steel bushings for repetitive assembly & disassembly. All hardware is stainless steel to avoid corrosion caused by dissimilar metals.
- Lid screws are self captivating (lid holes are threaded with the first installation of lid screws).
- Internal features are maximized for mounting options and vary with size:
  - Internal DIN rail mounting tabs molded into most models, except sizes "C" and "D".
  - Threaded (M3) integral brass inserts and/or standoffs (#6 self tapping screws) for P.C. board or inner panel mounting in all but the smallest size ("B").
  - Vertical P.C. card guides (for 1.5 mm thick P.C. boards) are molded in all but the smallest size ("B").

Finish

- Enclosure color is a light gray (RAL 7035).

Accessories

- Breather Kit...*See Page* ***260***
- Small Rainproof Ventilator...*See Page* ***259***
- Pressure Compensation Plug...*See Page* ***259***

Solid Gray Lid Part No.	Clear Lid Part No.	Smoked Lid Part No.	H	W	D (w/lid)	Inner Panel	Foot Kit
1554B2GY	1554B2GYCL	1554B2GYSL	2.60	2.60	1.60	1554BPL	1554FT
1554E2GY	1554E2GYCL	1554E2GYSL	3.50	3.50	2.40	1554EPL	1554FT
1554EE2GY	1554EE2GYCL	1554EE2GYSL	3.50	3.50	3.50	1554EPL	1554FT
1554L2GY	1554L2GYCL	1554L2GYSL	4.13	4.13	2.36	1554LPL	1554FT
1554LA2GY	1554LA2GYCL	1554LA2GYSL	4.13	4.13	3.54	1554LPL	1554FT
1554C2GY	1554C2GYCL	1554C2GYSL	4.70	2.60	1.60	1554CPL	1554FT
1554D2GY	1554D2GYCL	1554D2GYSL	4.70	2.60	2.40	1554CPL	1554FT
1554F2GY	1554F2GYCL	1554F2GYSL	4.70	3.50	2.40	1554FPL	1554FT
1554G2GY	1554G2GYCL	1554G2GYSL	4.70	3.50	3.15	1554FPL	1554FT
1554N2GY	1554N2GYCL	1554N2GYSL	4.70	4.70	2.40	1554NPL	1554FT
1554P2GY	1554P2GYCL	1554P2GYSL	4.70	4.70	3.50	1554NPL	1554FT
1554Q2GY	1554Q2GYCL	1554Q2GYSL	5.51	5.51	2.36	1554QPL	1554FT
1554QA2GY	1554QA2GYCL	1554QA2GYSL	5.51	5.51	3.54	1554QPL	1554FT
1554J2GY	1554J2GYCL	1554J2GYSL	6.30	3.50	2.40	1554JPL	1554FT
1554K2GY	1554K2GYCL	1554K2GYSL	6.30	3.50	3.50	1554JPL	1554FT
1554R2GY	1554R2GYCL	1554R2GYSL	6.30	6.30	2.40	1554RPL	1554FT
1554S2GY	1554S2GYCL	1554S2GYSL	6.30	6.30	3.50	1554RPL	1554FT
1554H2GY	1554H2GYCL	1554H2GYSL	7.10	4.70	2.40	1554HPL	1554FT
1554T2GY	1554T2GYCL	1554T2GYSL	7.10	4.70	3.50	1554HPL	1554FT
1554W2GY	1554W2GYCL	1554W2GYSL	7.10	7.10	2.36	1554WPL	1554FT
1554WA2GY	1554WA2GYCL	1554WA2GYSL	7.10	7.10	3.54	1554WPL	1554FT
1554U2GY	1554U2GYCL	1554U2GYSL	7.90	4.70	3.50	1554UPL	1554FT
1554V2GY	1554V2GYCL	1554V2GYSL	9.40	6.30	3.50	1554VPL	1554FT
1554VA2GY	1554VA2GYCL	1554VA2GYSL	9.40	6.30	3.50	1554VAPL	1554FT
1554VB2GY	1554VB2GYCL	1554VB2GYSL	9.40	6.30	4.30	1554VAPL	1554FT

Distributed by Grossauto Automation | +1 (262) 202-1600. | hammondsales@grossautomation.com

Technical references and CAD downloads available at www.hammondmfg.com

All dimensions in inches unless specified otherwise

Quality Products. Service Excellence.

© Hammond Manufacturing

Canada: 519.822.2960 or 905.456.3770 USA: 716.630.7030

Data Subject to change without notice

Type 4X, 6P Enclosures *1555F Series*

Watertight, Flanged Lid, UL Listed Options

Quick Link: hammfg.com/1555F

Application

- Designed for harsh industrial environments or outdoor applications (security, outdoor wireless, controls etc. etc.)
- Ideally suited for mounting printed circuit boards, panels or DIN rail mounted components. Cover features a smooth recessed area perfect for membrane keypads or labels. Base features robust mounting flanges capable of withstanding abuse.
- Designed for wall mounting. Interior is secure as lid screws are behind the lid. Can be made more secure if wall mounted with security screws (tamper resistant screws).

Standards

- Designed to meet NEMA Type 4, 4X, 6, 6P, 12 & 13 ratings which meet and exceed IP ratings up to and including IP68.
- UL 508A listed (File # E65324).
- Polycarbonate material carries a UL flammability rating of UL94 5VA @ 3mm - Recommended for outdoor use.

Construction

- Flanged lid is secured with self captivating M4 stainless steel machine screws (included), threaded into integral stainless steel bushings for repetitive assembly & disassembly. All hardware is stainless steel to avoid corrosion caused by dissimilar metals.
- Flanged lid screws are self captivating (lid holes are threaded with the first installation of lid screws).
- Internal features are maximized for mounting options and vary with size:
  - Internal DIN rail mounting tabs molded into lid (except smaller 1555CF22 & 1555CF42 enclosures).
  - Standoffs (#6 self tapping screws) for P.C. board or inner panel
- Standoffs molded in the interior of the lid & enclosure - designed for #4 x 1/4" self tapping screws (our part number 1555TS100)
- Gasket is one piece made from high temperature, U.L. listed silicone.
- Gasketed lid with two piece "tongue & groove" construction provides protection against access of oil, dust and water.
- Optional galvanized steel inner panels are available.

Finish

- Color is a light gray (RAL 7035) to help keep heat absorption down.
- Satin texture finish with smooth recessed surface on lid for a membrane keypad or label.

Accessories

- Breather Kit...*See Page* ***260***
- Pressure Compensation Plug...*See Page* ***259***
- Small Rainproof Ventilator...*See Page* ***259***
- Liquid-Tight, Strain Relief Cordgrips...*See Page* ***308***

Part Number	H	W	D	Optional Inner Panel
1555C2F22GY	4.70	2.60	1.65	**1555CFPL**
1555C2F42GY	4.70	2.60	2.44	**1555CFPL**
1555F2F17GY	4.70	3.60	1.47	**1555FFPL**
1555F2F42GY	4.70	3.60	2.44	**1555FFPL**
1555N2F17GY	4.70	4.70	1.47	**1555NFPL**
1555N2F42GY	4.70	4.70	2.44	**1555NFPL**
1555J2F17GY	6.30	3.60	1.47	**1555JFPL**
1555J2F42GY	6.30	3.60	2.44	**1555JFPL**
1555H2F17GY	7.10	4.70	1.47	**1555HFPL**
1555H2F42GY	7.10	4.70	2.44	**1555HFPL**

© Hammond Manufacturing

Water-Tight Polyester *R130-131-132 Series*

PolyTOP & PolyDOOR

Quick Link: hammfg.com/R130

Application

- Designed for use as instrument enclosures, electrical junction boxes or terminal wiring enclosures.
- Provide outstanding protection against dust, oil and pressurized water.
- Impervious to atmospheric and marine corrosion.

Standards

- NEMA Type 1, 2, 3, 3R, 4, 4X, 5, 12 and 13
- IEC 529, IP66
- V0 Flammability Rating
- CSA certified, Type 4, for use with industrial control equipment

Construction

- Two piece molded fiberglass reinforced polyester construction.
- Single channel lid and enclosure fastening access - for maximum internal space (ie, lid mounting hole doubles as the access to the bottom hole to mount enclosure to the wall). Outside the gasket seal and includes stainless steel inserts.
- Captive polyfibre, corrosion resistant, cover screws are provided with a standard slot head.
- Cover screws fasten into pre-threaded holes.
- Spring loaded stainless steel hinge pins are standard, allowing for quick lid removal.
- Recessed neoprene gasket with tongue and groove construction is oil and petroleum resistant.
- Threaded M6 stainless steel inserts provide for internal mounting.

Finish

- Light beige RAL 7032, Pantone 413

Part No.	Width	Length	Depth
R130-120-000	120	140	100
R130-122-000	120	200	100
R130-124-000	120	260	100
R130-160-000	160	180	100
R130-162-000	160	260	100
R130-164-000	160	340	100
R130-200-000	200	220	120
R130-202-000	200	320	120

Note: Table dimensions in mm.

Distributed by Gross Automation | +1 (262) 252-1600. | hammondsales@grossautomation.com

Technical references and CAD downloads available at www.hammondmfg.com

All dimensions in inches unless specified otherwise

Quality Products. Service Excellence.
© Hammond Manufacturing
Canada: 519.822.2960 or 905.456.3770 USA: 716.630.7030
Data Subject to change without notice

Type 4, 4X Glass Reinforced Polyester Enclosures *1590ZGRP Series*

Watertight, Thick Wall, NEMA 4X, IP65, UL Listed

Quick Link: hammfg.com/1590ZGRP

Application

- Designed for use as instrument enclosures, electrical junction boxes or terminal wiring enclosures.
- Provide outstanding protection against dust, dirt, and water.

Standards

- cUL & UL listed. Industrial Control Panel Enclosure Certified to NEMA 4, 4X standards (UL 508A) - File #E65324
- IP65 Rated

Construction

- Includes gasketed lid with two piece “tongue & groove” construction.
- Heavy duty, thick wall design.
- Lid contains self captivated stainless steel screws.
- Wall-mounting holes are located outside the gasket perimeter.
- Easy wall mounting via “through box - blind hole” construction, outside of the gasket protection (see photos below).
- Gasket material is Mohogumi rubber (EDPM). Heat resistance 100-120 degree C, cold -40 degree C
- Internal mounting shelf (for optional inner panels or PC boards) and bonding / mounting nuts molded in.
- Optional 14 gauge, galvanized steel inner panels available.
- Optional hinge kit, part number 1427HK molded from tough polyester. Note: with hinges installed, all four lid screws are required to maintain a proper seal.

Finish

- Molded from a grey, glass reinforced polyester. Smooth finish.

Accessories

- Pressure Compensation Plug...*See Page* ***259***
- Breather Kit...*See Page* ***260***
- Small Rainproof Ventilator...*See Page* ***259***
- Liquid-Tight, Strain Relief Cordgrips...*See Page* ***308***

	Enclosure			Optional
Part Number	H	W	D (w/lid)	Inner Panel
1590ZGRP081	3.17	2.97	2.17	1590ZGRP081PL
1590ZGRP084	3.17	2.97	2.95	1590ZGRP081PL
1590ZGRP082	4.32	2.94	2.17	1590ZGRP082PL
1590ZGRP121	4.72	4.78	3.57	1590ZGRP121PL
1590ZGRP083	6.30	2.94	2.17	1590ZGRP083PL
1590ZGRP161	6.30	6.30	3.56	1590ZGRP161PL
1590ZGRP131	7.48	2.94	2.17	1590ZGRP131PL
1590ZGRP233	7.87	9.84	4.54	1590ZGRP233PL
1590ZGRP123	8.66	4.72	3.56	1590ZGRP123PL
1590ZGRP234	10.04	9.87	4.73	1590ZGRP234PL
1590ZGRP235	10.04	9.87	6.32	1590ZGRP234PL
1590ZGRP162	10.24	6.30	3.56	1590ZGRP162PL
1590ZGRP163	14.20	6.30	3.54	1590ZGRP163PL
1590ZGRP243	15.75	9.84	4.73	1590ZGRP243PL
1590ZGRP244	15.75	9.84	6.30	1590ZGRP243PL
1590ZGRP253	15.94	15.75	4.72	1590ZGRP253PL
1590ZGRP263	23.62	9.84	4.72	1590ZGRP263PL
1590ZGRP264	23.62	9.84	6.30	1590ZGRP263PL

Distributed by Gross Automation | +1 (262) 252-1600. | hammondsales@grossautomation.com

Technical references and CAD downloads available at www.hammondmfg.com

All dimensions in inches unless specified otherwise

© Hammond Manufacturing

Type 4, 4X Polyester Inline Enclosure *PJI Series*

Construction

- Molded fiberglass polyester enclosure with matching cover is easily punched, cut, or drilled.
- Threaded brass inserts are provided for optional inner panel.
- Cover is fastened with captive stainless steel screws in threaded brass inserts.
- Captive oil resistant gasket provides a positive seal.
- Mounting through rear holes on enclosure. Use #8 x 1 inch screw (not included).
- Enhanced UV inhibitors protect against outdoor weathering.
- Aavailable with and without mounting feet.
- Operating temperatures between 130°C and -40°C (266°F to -40°F).
- Impact index of 6.78J (5 ft/lb).
- For corrosion resistance information, please refer to table in Technical Information.

Finish

- Fiberglass polyester material has a gray finish.
- Optional aluminum inner panel natural finish.

Quick Link: hammfg.com/PJI

Application

- Designed for use as instrument enclosures, electric, hydraulic or pneumatic control housings, electrical junction boxes or terminal wiring enclosures.
- Provides outstanding insulation and protection where equipment may be hosed down or be very wet.
- Ideal in applications with high temperatures or highly corrosive environments.

Standards

- UL 508A Type 1, 2, 3, 4, 4X, 12 and 13
- CSA Type 1, 2, 3, 4, 4X, 12 and 13
- Complies with
  - NEMA Type 1, 2, 3, 4, 4X, 12 and 13
  - IEC 60529, IP66

With Feet	Without Feet	Enclosure			Optional Aluminum Panel		
Part No.	Part No.	H	W	D	Part No.	H	W
PJ744	**PJ744FS**	6.74	3.93	3.88	**PJP74**	4	3.13
PJ944	**PJ944FS**	8.99	3.93	3.88	**PJP94**	6.25	3.13

© Hammond Manufacturing

Type 4X Polyester Junction Box *PJ Series*

Lift-Off Cover/Hinged Door with Screws

Quick Link: hammfg.com/PJ

Application

- Designed for use as instrument enclosures, electric, hydraulic or pneumatic control housings, electrical junction boxes or terminal wiring enclosures.
- Provides outstanding insulation and protection where equipment may be hosed down or be very wet.
- Ideal in applications with high temperatures or highly corrosive environments.

Standards

- UL 508A Type 1, 2, 3, 4, 4X, 12 and 13
- UL 508A Type 6P (see table)
- CSA Type 1, 2, 3, 4, 4X, 12 and 13
- CSA Type 6P (see table)
- Complies with
  - NEMA Type 1, 2, 3, 4, 4X,12 and 13
  - IEC 60529, IP66

Construction

- Molded fiberglass polyester enclosure with matching cover is easily punched, cut, or drilled.
- Enhanced UV inhibitors protect against outdoor weathering.
- Standard JIC sizes under 18" x 16".
- 10-32 threaded brass inserts are provided for optional inner panel or terminal kit mounting. Mounting hardware included.
- Cover is fastened with captive stainless steel screws in threaded brass inserts.
- Captive oil resistant gasket provides a positive seal.
- Threaded brass inserts are provided for mounting feet to the rear of the enclosure.
- Stainless steel mounting brackets and hardware are provided for mounting feet to the rear of the enclosure.
- Operating temperatures between 130°C and -40°C (266°F to -40°F).
- Impact index of 6.78J (5 ft/lb).
- For corrosion resistance information, please refer to table in the Technical Information section.

Finish

- Fiberglass polyester material has a gray finish.
- Optional inner panels are available in white powder coated finished steel, unfinished aluminum, or Fiberglass.

Accessories

- Additional Inner Panels...*See Page* ***280***
- Terminal Kit Assemblies...*See Page* ***288***
- Pole Mounting Kit...*See Page* ***309***
- PJ/PJU/PCJ Replacement Hardware Kits...*See Page* ***279***
- Stainless Replacement Mounting Feet...*See Page* ***278***
- Window Kits...*See Page* ***294***
- Climate Control...*See Page* ***234***
- General Accessories...*See Page* ***268***

Lift-Off Cover	Hinged Cover	Enclosure			Optional Inner Panel		
Part No.	Part No.	H	W	D	H	W	Part No.
PJ664[1]	**PJ664H**	6.10	6.10	4.13	4.88	4.88	**14R0505**
PJ864[1]	**PJ864H**	8.00	6.12	4.13	6.75	4.88	**14R0705**
PJ1084[1]	**PJ1084H**	10.13	8.26	4.13	8.75	6.88	**14R0907**
PJ1086[1]	**PJ1086H**	10.13	8.26	6.13	8.75	6.88	**14R0907**
PJ12106[1]	**PJ12106H**	12.13	10.26	6.13	10.75	8.88	**14R1109**
PJ12124[1]	**PJ12124H**	12.13	12.13	4.13	10.75	10.88	**14R1111**
PJ12126[1]	**PJ12126H**	12.13	12.13	6.13	10.75	10.88	**14R1111**
PJ14126[1]	**PJ14126H**	14.13	12.26	6.13	12.75	10.88	**14R1311**
PJ16148	**PJ16148H**	16.27	14.40	8.13	14.75	12.88	**14R1513**
PJ18168	**PJ18168H**	18.40	16.40	8.13	16.88	14.88	**P1868**
PJ20168	**PJ20168H**	20.00	16.00	8.13	18.44	14.44	**P2068**

Alternative inner panel options also available - Type 6P.

Distributed by Grossa Automation | +1 (262) 252-1600. | hammondsales@grossautomation.com

Technical references and CAD downloads available at www.hammondmfg.com

All dimensions in inches unless specified otherwise

© Hammond Manufacturing

Type 4X Polyester Junction Box *PJ Series*

Continuous Hinge Door with Twist/Snap Latches

Quick Link: hammfg.com/PJL

Application

- Designed for use as instrument enclosures, electric, hydraulic or pneumatic control housings, electrical junction boxes or terminal wiring enclosures.
- Provides outstanding insulation and protection where equipment may be hosed down or be very wet.
- Ideal in applications with high temperatures or highly corrosive environments.

Standards

- UL 508A Type 1, 2, 3, 4, 4X, 12, & 13
- CSA Type 1, 2, 3, 4, 4X, 12, & 13
- Complies with
  - NEMA Type 1, 2, 3, 4, 4X,12, & 13
  - IEC 60529, IP66

Construction

- Molded fiberglass polyester enclosure with matching cover is easily punched, cut, or drilled.
- Enhanced UV inhibitors protect against outdoor weathering.
- 10-32 threaded brass inserts are provided for optional inner panel or terminal kit mounting. Mounting hardware is included.
- Stainless steel butterfly type “twist latch” door fasteners.
- Stainless steel draw type “snap latch” door fasteners.
- Door fasteners include a provision for padlocking.
- Twist latch enclosures are available with bonded polycarbonate viewing windows.
- Door is supported with a continuous stainless steel hinge.
- Captive oil resistant gasket provides a positive seal.
- Threaded brass inserts are provided for mounting feet to the rear of the enclosure.
- Stainless steel mounting brackets and hardware are provided for mounting to the rear of the enclosure.
- Operating temperatures between 130°C and -40°C (266°F to -40°F).
- Impact index of 6.78J (5 ft/lb).
- For corrosion resistance information, please refer to table in the Technical Information section.

Finish

- Fiberglass polyester material has a gray finish.
- Optional inner panels are available in white powder coated finished steel, unfinished aluminum, or Fiberglass.

Accessories

- Additional Inner Panels...*See Page* ***280***
- Terminal Kit Assemblies...*See Page* ***288***
- Pole Mounting Kit...*See Page* ***309***
- PJ/PJU/PCJ Replacement Hardware Kits...*See Page* ***279***
- Window Kits...*See Page* ***294***
- Stainless Replacement Mounting Feet...*See Page* ***278***
- Climate Control...*See Page* ***234***
- General Accessories...*See Page* ***268***

Snap Latch

	Enclosure			Optional Inner Panel		
Part No.	H	W	D	H	W	Part No.
PJ664L	6.10	6.10	4.18	4.88	4.88	**14R0505**
PJ864L	8.00	6.12	4.13	6.75	4.88	**14R0705**
PJ1084L	10.13	8.26	4.13	8.75	6.88	**14R0907**
PJ1086L	10.13	8.26	6.13	8.75	6.88	**14R0907**
PJ12106L	12.13	10.26	6.13	10.75	8.88	**14R1109**
PJ12124L	12.13	12.13	4.13	10.75	10.88	**14R1111**
PJ12126L	12.13	12.13	6.13	10.75	10.88	**14R1111**
PJ14126L	14.13	12.26	6.13	12.75	10.88	**14R1311**
PJ16148L	16.27	14.40	8.13	14.75	12.88	**14R1513**
PJ18168L	18.40	16.40	8.13	16.88	14.88	**P1868**
PJ20168L	20.00	16.00	8.13	18.44	14.44	**P2068**

Alternative inner panel options also available.

Twist Latch

	Enclosure			Optional Inner Panel		
Part No.	H	W	D	H	W	Part No.
PJ664T	6.10	6.10	4.18	4.88	4.88	**14R0505**
PJ864T	8.00	6.12	4.13	6.75	4.88	**14R0705**
PJ1084T	10.13	8.26	4.13	8.75	6.88	**14R0907**
PJ1086T	10.13	8.26	6.13	8.75	6.88	**14R0907**
PJ12106T	12.13	10.26	6.13	10.75	8.88	**14R1109**
PJ14126T	14.13	12.26	6.13	12.75	10.88	**14R1311**
PJ16148T	16.27	14.40	8.13	14.75	12.88	**14R1513**
PJ18168T	18.40	16.40	8.13	16.88	14.88	**P1868**
PJ20168T	20.00	16.00	8.13	18.44	14.44	**P2068**

Alternative inner panel options also available.

Distributed by Gross Automation | +1 (262) 252-1000 | Hammond.Parts@grossautomation.com

Technical references and CAD downloads available at www.hammondmfg.com

All dimensions in inches unless specified otherwise

© Hammond Manufacturing

Type 4X Polyester Junction Box w/ Window *PJ Series*

Various Door Styles

Quick Link: hammfg.com/PJW

Application

- Designed for use as instrument enclosures, electric, hydraulic or pneumatic control housings, electrical junction boxes or terminal wiring enclosures.
- Provides outstanding insulation and protection where equipment may be hosed down or be very wet.
- Ideal in applications with high temperatures or highly corrosive environments.

Standards

- UL 508A Type 1, 2, 3, 4, 4X, 12 and 13
- CSA Type 1, 2, 3, 4, 4X, 12 and 13
- Complies with
  - NEMA Type 1, 2, 3, 4, 4X, 12, & 13
  - IEC 60529, IP66

Construction

- Molded fiberglass polyester enclosure with matching cover is easily punched, cut, or drilled.
- Enhanced UV inhibitors protect against outdoor weathering.
- Standard JIC sizes under 18”x16”.
- Threaded brass inserts are provided for optional inner panel or terminal kit mounting. Mounting hardware is included.
- Stainless steel draw type “snap latch” door fasteners.
- Door fasteners include a provision for padlocking.
- Enclosures are available with bonded polycarbonate viewing windows.
- Door is supported with a continuous stainless steel hinge.
- Captive oil resistant gasket provides a positive seal.
- Threaded brass inserts are provided for mounting feet to the rear of the enclosure.
- Stainless steel mounting brackets and hardware are provided for mounting to the rear of the enclosure.
- Operating temperatures between 130°C and -40°C (266°F to -40°F).
- Impact index of 6.78J (5 ft/lb).
- For corrosion resistance information, please refer to table in the Technical Information section.

Finish

- Fiberglass polyester material has a gray finish.
- Optional inner panels are available in white powder coated finished steel or unfinished aluminum, or Fiberglass.

Accessories

- Additional Inner Panels...*See Page* ***280***
- Terminal Kit Assemblies...*See Page* ***288***
- Pole Mounting Kit...*See Page* ***309***
- PJ/PJU/PCJ Replacement Hardware Kits...*See Page* ***279***
- Stainless Replacement Mounting Feet...*See Page* ***278***
- Climate Control...*See Page* ***234***
- General Accessories...*See Page* ***268***

Lift-Off Part No.	Hinged Part No.	Snap Latch Part No.	Twist Latch Part No.	Enclosure H	Enclosure W	Enclosure D	Optional Inner Panel H	Optional Inner Panel W	Optional Inner Panel Part No.
PJ664W	PJ664HW	PJ664LW	PJ664TW	6.10	6.10	4.18	4.88	4.88	14R0505
PJ864W	PJ864HW	PJ864LW	PJ864TW	8.00	6.12	4.13	6.75	4.88	14R0705
PJ1084W	PJ1084HW	PJ1084LW	PJ1084TW	10.13	8.26	4.13	8.75	6.88	14R0907
PJ1086W	PJ1086HW	PJ1086LW	PJ1086TW	10.13	8.26	6.13	8.75	6.88	14R0907
PJ12106W	PJ12106HW	PJ12106LW	PJ12106TW	12.13	10.26	6.13	10.75	8.88	14R1109
PJ12124W	PJ12124HW	PJ12124LW	PJ12124TW	12.13	12.13	4.13	10.75	10.88	14R1111
PJ12126W	PJ12126HW	PJ12126LW	PJ12126TW	12.13	12.13	6.13	10.75	10.88	14R1111
PJ14126W	PJ14126HW	PJ14126LW	PJ14126TW	14.13	12.26	6.13	12.75	10.88	14R1311
PJ16148W	PJ16148HW	PJ16148LW	PJ16148TW	16.27	14.40	8.13	14.75	12.88	14R1513
PJ18168W	PJ18168HW	PJ18168LW	PJ18168TW	18.40	16.40	8.13	16.88	14.88	P1868
PJ20168W	PJ20168HW	PJ20168LW	PJ20168TW	20.00	16.00	8.13	18.44	14.44	P2068

Alternative inner panel options also available.

Distributed by Gross Automation | +1 (262) 252-1600. | hammondsales@grossautomation.com

Technical references and CAD downloads available at www.hammondmfg.com

All dimensions in inches unless specified otherwise

© Hammond Manufacturing

Type 4X Polyester Junction Box w/ Raised Lid (Solid and Window) *PJ Series*

Lift-Off Cover/Hinged Door with Screws

Quick Link: hammfg.com/PJR

Application

- Designed for use as instrument enclosures, electric, hydraulic or pneumatic control housings, electrical junction boxes or terminal wiring enclosures.
- Provides outstanding insulation and protection where equipment may be hosed down or be very wet.
- Ideal in applications with high temperatures or highly corrosive environments.

Standards

- UL 508A Type 1, 2, 3, 4, 4X, 12 and 13
- CSA Type 1, 2, 3, 4, 4X, 12 and 13
- Complies with
  - NEMA Type 1, 2, 3, 4, 4X, 12 and 13
  - IEC 60529, IP66

Construction

- Molded fiberglass polyester enclosure with matching cover is easily punched, cut, or drilled.
- Enhanced UV inhibitors protect against outdoor weathering.
- Standard JIC sizes under 18" x 16".
- Threaded brass inserts are provided for optional inner panel or terminal kit mounting. Mounting hardware is included.
- Cover fastened with captive stainless steel screws in threaded brass inserts.
- Door fasteners include a provision for padlocking.
- Enclosures are available with bonded polycarbonate viewing windows.
- Door is supported with a continuous stainless steel hinge.
- Captive oil resistant gasket provides a positive seal.
- Threaded brass inserts are provided for mounting feet to the rear of the enclosure.
- Stainless steel mounting brackets and hardware are provided for mounting to the rear of the enclosure.
- Operating temperatures between 130°C and -40°C (266°F to -40°F).
- Impact index of 6.78J (5 ft/lb).
- For corrosion resistance information, please refer to table in the Technical Information section.

Finish

- Fiberglass polyester material has a gray finish.
- Optional inner panels are available in white powder coated finished steel or unfinished aluminum, or Fiberglass.

Accessories

- Additional Inner Panels...*See Page* ***280***
- Terminal Kit Assemblies...*See Page* ***288***
- Swing Panels...*See Page* ***290***
- Pole Mounting Kit...*See Page* ***309***
- PJ/PJU/PCJ Replacement Hardware Kits...*See Page* ***279***
- Stainless Replacement Mounting Feet...*See Page* ***278***
- Climate Control...*See Page* ***234***
- General Accessories...*See Page* ***268***

Raised Lift-Off Solid Cover Part No.	Raised Window Cover Lift-Off Part No.	Raised Hinged Solid Cover Part No.	Raised Window Hinged Cover Part No.	Enclosure H	Enclosure W	Enclosure D	Optional Inner Panel H	Optional Inner Panel W	Optional Inner Panel Part No.
PJ664R [1]	PJ664RW	PJ664RH	PJ664RHW	6.10	6.10	4.18	4.88	4.88	14R0505
PJ864R [1]	PJ864RW	PJ864RH	PJ864RHW	8.00	6.12	4.13	6.75	4.88	14R0705
PJ1084R [1]	PJ1084RW	PJ1084RH	PJ1084RHW	10.13	8.26	4.13	8.75	6.88	14R0907
PJ1086R [1]	PJ1086RW	PJ1086RH	PJ1086RHW	10.13	8.26	6.13	8.75	6.88	14R0907
PJ12106R [1]	PJ12106RW	PJ12106RH	PJ12106RHW	12.13	10.26	6.13	10.75	8.88	14R1109
PJ12124R [1]	PJ12124RW	PJ12124RH	PJ12124RHW	12.13	12.13	4.13	10.75	10.88	14R1111
PJ12126R [1]	PJ12126RW	PJ12126RH	PJ12126RHW	12.13	12.13	6.13	10.75	10.88	14R1111
PJ14126R [1]	PJ14126RW	PJ14126RH	PJ14126RHW	14.13	12.26	6.13	12.75	10.88	14R1311
PJ16148R	PJ16148RW	PJ16148RH	PJ16148RHW	16.27	14.40	8.13	14.75	12.88	14R1513
PJ18168R	PJ18168RW	PJ18168RH	PJ18168RHW	18.40	16.40	8.13	16.88	14.88	P1868
PJ20168R	PJ20168RW	PJ20168RH	PJ20168RHW	20.00	16.00	8.13	18.44	14.44	P2068

Alternative inner panel options also available. [1] Meets Type 6P

Distributed by: Grossa Automation | +1 (262) 252-1600. | hammondsales@grossautomation.com

Technical references and CAD downloads available at www.hammondmfg.com

All dimensions in inches unless specified otherwise

Quality Products. Service Excellence.
© Hammond Manufacturing
Canada: 519.822.2960 or 905.456.3770 USA: 716.630.7030
Data Subject to change without notice

Type 4X Polyester Junction Box w/ Raised Lid (Solid and Window) *PJ Series*

Continuous Hinge Door with Snap Latches

Quick Link: hammfg.com/PJRL

Application

- Designed for use as instrument enclosures, electric, hydraulic or pneumatic control housings, electrical junction boxes or terminal wiring enclosures.
- Provides outstanding insulation and protection where equipment may be hosed down or be very wet.
- Ideal in applications with high temperatures or highly corrosive environments.

Standards

- UL 508A Type 1, 2, 3, 4, 4X, 12 and 13
- CSA Type 1, 2, 3, 4, 4X, 12 and 13
- Complies with
  - NEMA Type 1, 2, 3, 4, 4X, 12, & 13
  - IEC 60529, IP66

Construction

- Molded fiberglass polyester enclosure with matching cover is easily punched, cut, or drilled.
- Enhanced UV inhibitors protect against outdoor weathering.
- Standard JIC sizes under 18"x16".
- Threaded brass inserts are provided for optional inner panel or terminal kit mounting. Mounting hardware is included.
- Stainless steel draw type "snap latch" door fasteners.
- Door fasteners include a provision for padlocking.
- Enclosures are available with bonded polycarbonate viewing windows.
- Door is supported with a continuous stainless steel hinge.
- Captive oil resistant gasket provides a positive seal.
- Threaded brass inserts are provided for mounting feet to the rear of the enclosure.
- Stainless steel mounting brackets and hardware are provided for mounting to the rear of the enclosure.
- Operating temperatures between 130°C and -40°C (266°F to -40°F).
- Impact index of 6.78J (5 ft/lb).
- For corrosion resistance information, please refer to table in the Technical Information section.

Finish

- Fiberglass polyester material has a gray finish.
- Optional inner panels are available in white powder coated finished steel or unfinished aluminum, or fiberglass.

Accessories

- Additional Inner Panels...*See Page* ***280***
- Terminal Kit Assemblies...*See Page* ***288***
- Swing Panels...*See Page* ***290***
- Pole Mounting Kit...*See Page* ***309***
- PJ/PJU/PCJ Replacement Hardware Kits...*See Page* ***279***
- Stainless Replacement Mounting Feet...*See Page* ***278***
- Climate Control...*See Page* ***234***
- General Accessories...*See Page* ***268***

Solid Cover	Window	Enclosure			Optional Inner Panel		
Part No.	Cover Part No.	H	W	D	H	D	Part No.
PJ664RL	**PJ664RLW**	6.10	6.10	4.18	4.88	4.88	14R0505
PJ864RL	**PJ864RLW**	8.00	6.12	4.13	6.75	4.88	14R0705
PJ1084RL	**PJ1084RLW**	10.13	8.26	4.13	8.75	6.88	14R0907
PJ1086RL	**PJ1086RLW**	10.13	8.26	6.13	8.75	6.88	14R0907
PJ12106RL	**PJ12106RLW**	12.13	10.26	6.13	10.75	8.88	14R1109
PJ12124RL	**PJ12124RLW**	13.33	11.85	12.32	12.32	13.72	14R1111
PJ12126RL	**PJ12126RLW**	13.33	11.85	12.32	12.32	13.72	14R1111
PJ14126RL	**PJ14126RLW**	14.13	12.26	6.13	12.75	10.88	14R1311
PJ16148RL	**PJ16148RLW**	16.27	14.40	8.13	14.75	12.88	14R1513
PJ18168RL	**PJ18168RLW**	18.40	16.40	8.13	16.88	14.88	P1868
PJ20168RL	**PJ20168RLW**	20.00	16.00	8.13	18.44	14.44	P2068
PJ24208RL	**PJ24208RLW**	24.00	20.00	8.13	21.00	17.00	18P2117
PJ24248RL [1]	**PJ24248RLW** [1]	24.00	24.00	8.13	21.00	21.00	18P2121
PJ30248RL [1]	**PJ30248RLW** [1]	30.00	24.00	8.13	27.00	21.00	18P2721
PJ242010RL [1]	**PJ242010RLW** [1]	24.00	20.00	10.13	21.00	17.00	18P2117
PJ242410RL [1]	**PJ242410RLW** [1]	24.00	24.00	10.13	21.00	21.00	18P2121
PJ302410RL [1]	**PJ302410RLW** [1]	30.00	24.00	10.13	27.00	21.00	18P2721

Alternative inner panel options also available. [1] Uses larger mounting foot.

Distributed by Gross Automation | 1-262-252-1600. | hammondsales@grossautomation.com

Technical references and CAD downloads available at www.hammondmfg.com

All dimensions in inches unless specified otherwise

© Hammond Manufacturing

Type 4X Polyester Junction Box w/ Raised Lid (Solid and Window) *PJ Series*

Continuous Hinge Door with Twist Latches

Quick Link: hammfg.com/PJRT

Application

- Designed for use as instrument enclosures, electric, hydraulic or pneumatic control housings, electrical junction boxes or terminal wiring enclosures.
- Provides outstanding insulation and protection where equipment may be hosed down or be very wet.
- Ideal in applications with high temperatures or highly corrosive environments.

Standards

- UL 508A Type 1, 2, 3, 4, 4X, 12 and 13
- CSA Type 1, 2, 3, 4, 4X, 12 and 13
- Complies with
  - NEMA Type 1, 2, 3, 4, 4X, 12, & 13
  - IEC 60529, IP66

Construction

- Molded fiberglass polyester enclosure with matching cover is easily punched, cut, or drilled.
- Enhanced UV inhibitors protect against outdoor weathering.
- Threaded brass inserts are provided for optional inner panel or terminal kit mounting. Mounting hardware is included.
- Stainless steel draw type “twist latch” door fasteners.
- Door fasteners include a provision for padlocking.
- Enclosures are available with bonded polycarbonate viewing windows.
- Door is supported with a continuous stainless steel hinge.
- Captive oil resistant gasket provides a positive seal.
- Threaded brass inserts are provided for mounting feet to the rear of the enclosure.
- Stainless steel mounting brackets and hardware are provided for mounting to the rear of the enclosure.
- Operating temperatures between 130°C and -40°C (266°F to -40°F).
- Impact index of 6.78J (5 ft/lb).
- For corrosion resistance information, please refer to table in the Technical Information section.

Finish

- Fiberglass polyester material has a gray finish.
- Optional inner panels are available in white powder coated finished steel or unfinished aluminum, or fiberglass.

Accessories

- Additional Inner Panels...*See Page* **280**
- Terminal Kit Assemblies...*See Page* **288**
- Swing Panels...*See Page* **290**
- Pole Mounting Kit...*See Page* **309**
- PJ/PJU/PCJ Replacement Hardware Kits...*See Page* **279**
- Stainless Replacement Mounting Feet...*See Page* **278**
- Climate Control...*See Page* **234**
- General Accessories...*See Page* **268**

Solid Cover	Window	Enclosure			Optional Inner Panel		
Part No.	Cover Part No.	H	W	D	H	W	Part No.
PJ664RT	**PJ664RTW**	6.10	6.10	4.18	4.88	4.88	**14R0505**
PJ864RT	**PJ864RTW**	8.00	6.12	4.13	6.75	4.88	**14R0705**
PJ1084RT	**PJ1084RTW**	10.13	8.26	4.13	8.75	6.88	**14R0907**
PJ1086RT	**PJ1086RTW**	10.13	8.26	6.13	8.75	6.88	**14R0907**
PJ12106RT	**PJ12106RTW**	12.13	10.26	6.13	10.75	8.88	**14R1109**
PJ12124RT	**PJ12124RTW**	12.13	12.13	4.13	10.75	10.88	**14R1111**
PJ12126RT	**PJ12126RTW**	12.13	12.13	6.13	10.75	10.88	**14R1111**
PJ14126RT	**PJ14126RTW**	14.13	12.26	6.13	12.75	10.88	**14R1311**
PJ16148RT	**PJ16148RTW**	16.27	14.40	8.13	14.75	12.88	**14R1513**
PJ18168RT	**PJ18168RTW**	18.40	16.40	8.13	16.88	14.88	**P1868**
PJ20168RT	**PJ20168RTW**	20.00	16.00	8.13	18.44	14.44	**P2068**
PJ24208RT [1]	**PJ24208RTW** [1]	24.00	20.00	8.13	21.00	17.00	**18P2117**
PJ24248RT [1]	**PJ24248RTW** [1]	24.00	24.00	8.13	21.00	21.00	**18P2121**
PJ30248RT [1]	**PJ30248RTW** [1]	30.00	24.00	8.13	27.00	21.00	**18P2721**
PJ242010RT [1]	**PJ242010RTW** [1]	24.00	20.00	10.13	21.00	17.00	**18P2117**
PJ242410RT [1]	**PJ242410RTW** [1]	24.00	24.00	10.13	21.00	21.00	**18P2121**
PJ302410RT [1]	**PJ302410RTW** [1]	30.00	24.00	10.13	27.00	21.00	**18P2721**

Alternative inner panel options also available. [1] Uses larger mounting foot.

Distributed by: Gross Automation Inc. (262) 252-1600. | hammondsales@grossautomation.com

Technical references and CAD downloads available at www.hammondmfg.com

All dimensions in inches unless specified otherwise

Quality Products. Service Excellence.
© Hammond Manufacturing
Canada: 519.822.2960 or 905.456.3770 USA: 716.630.7030
Data Subject to change without notice

Type 4X Polyester Junction Box (Solid and Clear Cover) *PJU Series*

Continuous Hinge Door with Snap Latches

Quick Link: hammfg.com/PJU

Application

- Designed for use as instrument enclosures, electric, hydraulic or pneumatic control housings, electrical junction boxes or terminal wiring enclosures.
- Provides outstanding insulation and protection where equipment may be hosed down or be very wet.
- Ideal in applications with high temperatures or highly corrosive environments.

Standards

- UL 508A Type 1, 2, 3, 4, 4X, 12 and 13
- CSA Type 1, 2, 3, 4, 4X, 12 and 13
- Complies with
  - NEMA Type 1, 2, 3, 4, 4X, 12 and 13
  - IEC 60529, IP66

Construction

- Molded fiberglass polyester enclosure with matching cover is easily punched, cut, or drilled.
- Enhanced UV inhibitors protect against outdoor weathering.
- Standard JIC sizes under 18" x 16".
- Threaded brass inserts are provided for optional inner panel or terminal kit mounting. Mounting hardware is included.
- Stainless steel draw type "snap latch" door fasteners.
- Door fasteners include a provision for padlocking.
- Enclosure available with clear Polycarbonate cover to 16" x 14".
- Molded hinge with stainless steel pin.
- Captive oil resistant gasket provides a positive seal.
- Available with Polycarbonate flange or foot mount brackets for multi-directional mounting.
- Operating temperatures between 130°C and -40°C (266°F to -40°F).
- Impact index of 6.78J (5 ft/lb).
- For corrosion resistance information, please refer to table in the Technical Information section.

Finish

- Fiberglass polyester material has a gray finish.
- Optional inner panels are available in white powder coated finished steel or unfinished aluminum, or Fiberglass.

Accessories

- Additional Inner Panels...*See Page* ***280***
- Terminal Kit Assemblies...*See Page* ***288***
- Swing Panels...*See Page* ***290***
- Pole Mounting Kit...*See Page* ***309***
- PJ/PJU/PCJ Replacement Hardware Kits...*See Page* ***279***
- Moulded Replacement Polycarbonate Flange...*See Page* ***277***
- Moulded Replacement Polycarbonate Feet...*See Page* ***278***
- Climate Control...*See Page* ***234***
- General Accessories...*See Page* ***268***

Solid Cover		Clear Cover							
w/Flange	w/Feet	w/Flange	w/Feet	Enclosure			Optional Inner Panel		
Part No.	Part No.	Part No.	Part No.	H	W	D	H	W	Part No.
PJU664LF	**PJU664L**	**PJU664CCLF**	**PJU664CCL**	6.05	6.27	4.13	4.88	4.88	**14R0505**
PJU864LF	**PJU864L**	**PJU864CCLF**	**PJU864CCL**	8.05	6.27	4.13	6.75	4.88	**14R0705**
PJU1084LF	**PJU1084L**	**PJU1084CCLF**	**PJU1084CCL**	10.05	8.27	4.13	8.75	6.88	**14R0907**
PJU12106LF	**PJU12106L**	**PJU12106CCLF**	**PJU12106CCL**	12.05	10.27	6.13	10.75	8.88	**14R1109**
PJU14126LF	**PJU14126L**	**PJU14126CCLF**	**PJU14126CCL**	14.05	12.27	6.13	12.75	10.88	**14R1311**
PJU16148LF	**PJU16148L**	**PJU16148CCLF**	**PJU16148CCL**	16.05	14.27	8.13	14.75	12.88	**14R1513**
PJU181610LF	**PJU181610L**			18.30	16.52	10.13	16.88	14.88	**P1868**
PJU201610LF	**PJU201610L**			20.50	16.27	10.13	18.44	14.44	**P2068**

Alternative inner panel options also available.

© Hammond Manufacturing

Type 4X Polyester Junction Box (Solid and Clear Cover) *PJU Series*

Continuous Hinge Door with Twist Latches

Quick Link: hammfg.com/PJUTF

Application

- Designed for use as instrument enclosures, electric, hydraulic or pneumatic control housings, electrical junction boxes or terminal wiring enclosures.
- Provides outstanding insulation and protection where equipment may be hosed down or be very wet.
- Ideal in applications with high temperatures or highly corrosive environments.

Standards

- UL 508A Type 1, 2, 3, 4, 4X, 12 and 13
- CSA Type 1, 2, 3, 4, 4X, 12 and 13
- Complies with
  - NEMA Type 1, 2, 3, 4, 4X, 12 and 13
  - IEC 60529, IP66

Construction

- Molded fiberglass polyester enclosure with matching cover is easily punched, cut, or drilled.
- Enhanced UV inhibitors protect against outdoor weathering.
- Standard JIC sizes under 18" x 16".
- Threaded brass inserts are provided for optional inner panel or terminal kit mounting. Mounting hardware is included.
- Stainless steel butterfly type "twist latch" door fasteners.
- Door fasteners include a provision for padlocking.
- Enclosure available with clear Polycarbonate cover to 16" x 14".
- Molded hinge with stainless steel pin.
- Captive oil resistant gasket provides a positive seal.
- Available with Polycarbonate flange or foot mount brackets for multi-directional mounting.
- Operating temperatures between 130°C and -40°C (266°F to -40°F).
- Impact index of 6.78J (5 ft/lb).
- For corrosion resistance information, please refer to table in the Technical Information section.

Finish

- Fiberglass polyester material has a gray finish.
- Optional inner panels are available in white powder coated finished steel or unfinished aluminum, or Fiberglass.

Accessories

- Additional Inner Panels...*See Page* ***280***
- Swing Panels...*See Page* ***290***
- Terminal Kit Assemblies...*See Page* ***288***
- Pole Mounting Kit...*See Page* ***309***
- PJ/PJU/PCJ Replacement Hardware Kits...*See Page* ***279***
- Moulded Replacement Polycarbonate Flange...*See Page* ***277***
- Moulded Replacement Polycarbonate Feet...*See Page* ***278***
- Climate Control...*See Page* ***234***
- General Accessories...*See Page* ***268***

Solid Cover		Clear Cover		Enclosure			Optional Inner Panel		
w/Flange	w/Feet	w/Flange	w/Feet						
Part No.	Part No.	Part No.	Part No.	H	W	D	H	W	Part No.
PJU664TF	**PJU664T**	**PJU664CCTF**	**PJU664CCT**	6.05	6.27	4.13	4.88	4.88	**14R0505**
PJU864TF	**PJU864T**	**PJU864CCTF**	**PJU864CCT**	8.05	6.27	4.13	6.75	4.88	**14R0705**
PJU1084TF	**PJU1084T**	**PJU1084CCTF**	**PJU1084CCT**	10.05	8.27	4.13	8.75	6.88	**14R0907**
PJU12106TF	**PJU12106T**	**PJU12106CCTF**	**PJU12106CCT**	12.05	10.27	6.13	10.75	8.88	**14R1109**
PJU14126TF	**PJU14126T**	**PJU14126CCTF**	**PJU14126CCT**	14.05	12.27	6.13	12.75	10.88	**14R1311**
PJU16148TF	**PJU16148T**	**PJU16148CCTF**	**PJU16148CCT**	16.05	14.27	8.13	14.75	12.88	**14R1513**
PJU181610TF	**PJU181610T**			18.30	16.52	10.13	16.88	14.88	**P1868**
PJU201610TF	**PJU201610T**			20.50	16.27	10.13	18.44	14.44	**P2068**

Alternative inner panel options also available.

Distributed by Gross Automation | +1 (262) 252-1600. | hammondsales@grossautomation.com

Technical references and CAD downloads available at www.hammondmfg.com

All dimensions in inches unless specified otherwise

Quality Products. Service Excellence.
© Hammond Manufacturing
Canada: 519.822.2960 or 905.456.3770 USA: 716.630.7030
Data Subject to change without notice

Type 4X Polyester Junction Box (Solid and Clear Cover) *PJU Series*

Lift-Off Cover with Screws

Quick Link: hammfg.com/PJUF

Application

- Designed for use as instrument enclosures, electric, hydraulic or pneumatic control housings, electrical junction boxes or terminal wiring enclosures.
- Provides outstanding insulation and protection where equipment may be hosed down or be very wet.
- Ideal in applications with high temperatures or highly corrosive environments.

Standards

- UL 508A Type 1, 2, 3, 4, 4X, 12 and 13 (6P for solid covers only)
- CSA Type 1, 2, 3, 4, 4X, 12 and 13 (6P for solid covers only)
- Complies with
  - NEMA Type 1, 2, 3, 4, 4X, 12 and 13 (6P for solid covers only)
  - IEC 60529, IP66

Construction

- Molded fiberglass polyester enclosure with matching cover is easily punched, cut, or drilled.
- Enhanced UV inhibitors protect against outdoor weathering.
- Standard JIC sizes under 18" x 16".
- Threaded brass inserts are provided for optional inner panel or terminal kit mounting. Mounting hardware is included.
- Cover fastened with captive stainless steel screws in threaded brass inserts.
- Enclosure available with clear Polycarbonate cover to 16" x 14".
- Captive oil resistant gasket provides a positive seal.
- Available with Polycarbonate flange or foot mount brackets for multi-directional mounting.
- Operating temperatures between 130°C and -40°C (266°F to -40°F).
- Impact index of 6.78J (5 ft/lb).
- For corrosion resistance information, please refer to table in the Technical Information section.

Finish

- Fiberglass polyester material has a gray finish.
- Optional inner panels are available in white powder coated finished steel or unfinished aluminum, or Fiberglass.

Accessories

- Additional Inner Panels...*See Page* ***280***
- Terminal Kit Assemblies...*See Page* ***288***
- Swing Panels...*See Page* ***290***
- Pole Mounting Kit...*See Page* ***309***
- PJ/PJU/PCJ Replacement Hardware Kits...*See Page* ***279***
- Moulded Replacement Polycarbonate Flange...*See Page* ***277***
- Moulded Replacement Polycarbonate Feet...*See Page* ***278***
- Climate Control...*See Page* ***234***
- General Accessories...*See Page* ***268***

Solid Cover		Clear Cover		Enclosure			Optional Inner Panel		
w/Flange Part No.	w/Feet Part No.	w/Flange Part No.	w/Feet Part No.	H	W	D	H	W	Part No.
PJU664F	**PJU664**	**PJU664CCF**	**PJU664CC**	6.05	6.27	4.13	4.88	4.88	**14R0505**
PJU864F	**PJU864**	**PJU864CCF**	**PJU864CC**	8.05	6.27	4.13	6.75	4.88	**14R0705**
PJU1084F	**PJU1084**	**PJU1084CCF**	**PJU1084CC**	10.05	8.27	4.13	8.75	6.88	**14R0907**
PJU12106F	**PJU12106**	**PJU12106CCF**	**PJU12106CC**	12.05	10.27	6.13	10.75	8.88	**14R1109**
PJU14126F	**PJU14126**	**PJU14126CCF**	**PJU14126CC**	14.05	12.27	6.13	12.75	10.88	**14R1311**
PJU16148F	**PJU16148**	**PJU16148CCF**	**PJU16148CC**	16.05	14.27	8.13	14.75	12.88	**14R1513**
PJU181610F	**PJU181610**			18.30	16.52	10.13	16.88	14.88	**P1868**
PJU201610F	**PJU201610**			20.50	16.27	10.13	18.44	14.44	**P2068**

Alternative inner panel options also available

Distributed by Gross Automation | +1 (262) 252-1600. | hammondsales@grossautomation.com

Technical references and CAD downloads available at www.hammondmfg.com

All dimensions in inches unless specified otherwise

© Hammond Manufacturing

Type 4X Polyester Junction Box (Solid and Clear Cover) *PJU Series*

Continuous Hinge Door with Screws

Quick Link: hammfg.com/PJUHF

Application

- Designed for use as instrument enclosures, electric, hydraulic or pneumatic control housings, electrical junction boxes or terminal wiring enclosures.
- Provides outstanding insulation and protection where equipment may be hosed down or be very wet.
- Ideal in applications with high temperatures or highly corrosive environments.

Standards

- UL 508A Type 1, 2, 3, 4, 4X, 12 and 13
- CSA Type 1, 2, 3, 4, 4X, 12 and 13
- Complies with
  - NEMA Type 1, 2, 3, 4, 4X, 12 and 13
  - IEC 60529, IP66

Construction

- Molded fiberglass polyester enclosure with matching cover is easily punched, cut, or drilled.
- Enhanced UV inhibitors protect against outdoor weathering.
- Standard JIC sizes under 18" x 16".
- Threaded brass inserts are provided for optional inner panel or terminal kit mounting. Mounting hardware is included.
- Cover fastened with captive stainless steel screws in threaded brass inserts.
- Enclosure available with clear Polycarbonate cover to 16" x 20".
- Molded hinge with stainless steel pin.
- Captive oil resistant gasket provides a positive seal.
- Available with Polycarbonate flange or foot mount brackets for multi-directional mounting.
- Operating temperatures between 130°C and -40°C (266°F to -40°F).
- Impact index of 6.78J (5 ft/lb).
- For corrosion resistance information, please refer to table in the Technical Information section.

Finish

- Fiberglass polyester material has a gray finish.
- Optional inner panels are available in white powder coated finished steel or unfinished aluminum, or Fiberglass.

Accessories

- Additional Inner Panels...*See Page* ***280***
- Terminal Kit Assemblies...*See Page* ***288***
- Swing Panels...*See Page* ***290***
- Pole Mounting Kit...*See Page* ***309***
- PJ/PJU/PCJ Replacement Hardware Kits...*See Page* ***279***
- Moulded Replacement Polycarbonate Flange...*See Page* ***277***
- Moulded Replacement Polycarbonate Feet...*See Page* ***278***
- Climate Control...*See Page* ***234***
- General Accessories...*See Page* ***268***

Solid Cover		Clear Cover		Enclosure			Optional Inner Panel		
w/Flange Part No.	w/Feet Part No.	w/Flange Part No.	w/Feet Part No.	H	W	D	H	W	Part No.
PJU664HF	PJU664H	PJU664CCHF	PJU664CCH	6.05	6.27	4.13	4.88	4.88	14R0505
PJU864HF	PJU864H	PJU864CCHF	PJU864CCH	8.05	6.27	4.13	6.75	4.88	14R0705
PJU1084HF	PJU1084H	PJU1084CCHF	PJU1084CCH	10.05	8.27	4.13	8.75	6.88	14R0907
PJU12106HF	PJU12106H	PJU12106CCHF	PJU12106CCH	12.05	10.27	6.13	10.75	8.88	14R1109
PJU14126HF	PJU14126H	PJU14126CCHF	PJU14126CCH	14.05	12.27	6.13	12.75	10.88	14R1311
PJU16148HF	PJU16148H	PJU16148CCHF	PJU16148CCH	16.05	14.27	8.13	14.75	12.88	14R1513
PJU181610HF	PJU181610H			18.30	16.52	10.13	16.88	14.88	P1868
PJU201610HF	PJU201610H			20.50	16.27	10.13	18.44	14.44	P2068

Alternative inner panel options also available.

Distributed by Gross Automation | +1 (262) 252-1600. | hammondsales@grossautomation.com

Technical references and CAD downloads available at www.hammondmfg.com

All dimensions in inches unless specified otherwise

Quality Products. Service Excellence.
© Hammond Manufacturing
Canada: 519.822.2960 or 905.456.3770 USA: 716.630.7030
Data Subject to change without notice

Type 4X Polyester Junction Box w/ Window *PJU Series*

Various Door Styles

Quick Link: hammfg.com/PJUW

Application

- Designed for use as instrument enclosures, electric, hydraulic or pneumatic control housings, electrical junction boxes or terminal wiring enclosures.
- Provides outstanding insulation and protection where equipment may be hosed down or be very wet.
- Ideal in applications with high temperatures or highly corrosive environments.

Standards

- UL 508A Type 1, 2, 3, 4, 4X, 12 and 13
- CSA Type 1, 2, 3, 4, 4X, 12 and 13
- Complies with
  - NEMA Type 1, 2, 3, 4, 4X, 12 and 13
  - IEC 60529, IP66

Construction

- Molded fiberglass polyester enclosure with matching cover is easily punched, cut, or drilled.
- Enhanced UV inhibitors protect against outdoor weathering.
- Standard JIC sizes under 18”x16”.
- Threaded brass inserts are provided for optional inner panel or terminal kit mounting. Mounting hardware is included.
- Various latching options.
- Enclosures are available with bonded polycarbonate viewing windows.
- Door is supported with a continuous stainless steel hinge pin.
- Captive oil resistant gasket provides a positive seal.
- Threaded brass inserts are provided for mounting feet to the rear of the enclosure.
- Operating temperatures between 130°C and -40°C (266°F to -40°F).
- Impact index of 6.78J (5 ft/lb).
- For corrosion resistance information, please refer to table in the Technical Information section.

Finish

- Fiberglass polyester material has a light gray finish.
- Optional inner panels are available in white powder coated finished steel or unfinished aluminum, or Fiberglass.

Accessories

- Additional Inner Panels...*See Page* ***280***
- Terminal Kit Assemblies...*See Page* ***288***
- Swing Panels...*See Page* ***290***
- Pole Mounting Kit...*See Page* ***309***
- Moulded Replacement Polycarbonate Flange...*See Page* ***277***
- Moulded Replacement Polycarbonate Feet...*See Page* ***278***
- Climate Control...*See Page* ***234***
- General Accessories...*See Page* ***268***

Lift-Off Screw Cover		Hinged Screw Cover		Hinged Snap Latch		Enclosure			Optional Inner Panel		
w/Flange Part No.	w/Feet Part No.	w/Flange Part No.	w/Feet Part No.	w/Flange Part No.	w/Feet Part No.	H	W	D	H	W	Part No.
PJU664WF	**PJU664W**	**PJU664HWF**	**PJU664HW**	**PJU664LWF**	**PJU664LW**	6.05	6.27	4.13	4.88	4.88	**14R0505**
PJU864WF	**PJU864W**	**PJU864HWF**	**PJU864HW**	**PJU864LWF**	**PJU864LW**	8.05	6.27	4.13	6.75	4.88	**14R0705**
PJU1084WF	**PJU1084W**	**PJU1084HWF**	**PJU1084HW**	**PJU1084LWF**	**PJU1084LW**	10.05	8.27	4.13	8.75	6.88	**14R0907**
PJU12106WF	**PJU12106W**	**PJU12106HWF**	**PJU12106HW**	**PJU12106LWF**	**PJU12106LW**	12.05	10.27	6.13	10.75	8.88	**14R1109**
PJU14126WF	**PJU14126W**	**PJU14126HWF**	**PJU14126HW**	**PJU14126LWF**	**PJU14126LW**	14.05	12.27	6.13	12.75	10.88	**14R1311**
PJU16148WF	**PJU16148W**	**PJU16148HWF**	**PJU16148HW**	**PJU16148LWF**	**PJU16148LW**	16.05	14.27	8.13	14.75	12.88	**14R1513**
PJU181610WF	**PJU181610W**	**PJU181610HWF**	**PJU181610HW**	**PJU181610LWF**	**PJU181610LW**	18.30	16.52	10.13	16.88	14.88	**P1868**
PJU201610WF	**PJU201610W**	**PJU201610HWF**	**PJU201610HW**	**PJU201610LWF**	**PJU201610LW**	20.50	16.27	10.13	18.44	14.44	**P2068**

* see table below for full part number and latch including mounting feet

Distributed by Gross Automation | +1 (262) 252-1600. | hammondsales@grossautomation.com

Technical references and CAD downloads available at www.hammondmfg.com

All dimensions in inches unless specified otherwise

© Hammond Manufacturing

Canada: 519.822.2960 or 905.456.3770 USA: 716.630.7030

Data Subject to change without notice

Type 4X Polycarbonate Junction Box (Solid and Clear Cover) *PCJ Series*

Screw Cover

Quick Link: hammfg.com/PCJ-SC

Application

- Designed to insulate and protect controls and componets in both indoor and outdoor conditions
- Ideal for industrial pump controls, waste water, irrigation control along with solar/wind and chemical plants

Standards

- UL 508A Type 1, 2, 3, 4, 4X, 12 and 13
- CSA Type 1, 2, 3, 4, 4X, 12 and 13
- Complies with
  - NEMA Type 1, 2, 3, 4, 4X, 12 and 13
  - IEC 60529, IP66
  - Flamability V-O per UL 94
  - UV rating (f1) per UL746C - UV stabilized for outdoor use
  - Complient with RoHS directive

Construction

- Injection moulded polycarbonate thermoplastic enclosure with matching cover is easily punched, cut, or drilled
- Enhanced UV inhibitors protect against outdoor weathering
- Threaded brass inserts are provided for optional inner panel or terminal kit mounting. Mounting hardware is included
- Stainless steel 316 screw fasteners
- Enclosure available with clear Polycarbonate cover
- Captive oil resistant gasket provides a positive seal
- Available with Polycarbonate flange or foot mount brackets for multi-directional mounting
- Operating temperatures between 130°C and - 35 °C (266°F to - 31 °F)
- Impact index of 16 J (12 ft/lb)
- For corrosion resistance information, please refer to table in the Technical Information section

Finish

- Polycarbonate material has a Light gray finish
- Optional inner panels are available in white powder coated finished steel or unfinished aluminum, or Fiberglass

Accessories

- Additional Inner Panels...*See Page* ***284***
- Swing Panel...*See Page* ***291***
- Pole Mounting Kit...*See Page* ***309***
- PJ/PJU/PCJ Replacement Hardware Kits...*See Page* ***279***
- Moulded Replacement Polycarbonate Flange...*See Page* ***277***
- Moulded Replacement Polycarbonate Feet...*See Page* ***278***
- Climate Control...*See Page* ***234***
- General Accessories...*See Page* ***268***

Solid Cover		Clear Cover							
w/Flange	w/Feet	w/Flange	w/Feet	Enclosure			Optional Inner Panel		
Part No.	Part No.	Part No.	Part No.	H	W	D	H	W	Part No.
PCJ664F *	PCJ664*	PCJ664CCF *	PCJ664CC *	5.93	6.16	3.98	4.81	4.81	PCJR0505
PCJ864F *	PCJ864*	PCJ864CCF *	PCJ864CC *	7.94	6.16	3.98	6.75	4.88	PCJR0705
PCJ884F *	PCJ884*	PCJ884CCF *	PCJ884CC *	7.94	8.15	3.98	6.75	6.88	PCJR0808
PCJ1082F	PCJ1082	PCJ1082CCF	PCJ1082CC	9.93	8.15	2.70	8.75	6.88	PCJR0907
PCJ1084F	PCJ1084	PCJ1084CCF	PCJ1084CC	9.93	8.15	3.98	8.75	6.88	PCJR0907
PCJ1086F	PCJ1086	PCJ1086CCF	PCJ1086CC	9.93	8.15	5.98	8.75	6.88	PCJR0907
PCJ12104F	PCJ12104	PCJ12104CCF	PCJ12104CC	11.92	10.15	3.98	10.75	8.88	PCJR1109
PCJ12106F	PCJ12106	PCJ12106CCF	PCJ12106CC	11.92	10.15	5.98	10.75	8.88	PCJR1109
PCJ14126F	PCJ14126	PCJ14126CCF	PCJ14126CC	13.94	12.16	5.98	12.75	10.88	PCJR1311
PCJ16148F	PCJ16148	PCJ16148CCF	PCJ16148CC	15.98	13.98	7.81	14.75	12.88	14R1513
PCJ181610F	PCJ181610	PCJ181610CCF	PCJ181610CC	18.04	16.04	9.81	16.88	14.88	P1868

* Moulded hinge barrels removed from lid and body. Alternative inner panel options also available.

Distributed by Gross Automation | +1 (262) 252-1600. | hammondsales@grossautomation.com

Technical references and CAD downloads available at www.hammondmfg.com

All dimensions in inches unless specified otherwise

Quality Products. Service Excellence.
© Hammond Manufacturing
Canada: 519.822.2960 or 905.456.3770 USA: 716.630.7030
Data Subject to change without notice

Type 4X Polycarbonate Junction Box (Solid and Clear Cover) *PCJ Series*

Hinged Screw Cover

Quick Link: hammfg.com/PCJ-HSC

Application

- Designed to insulate and protect controls and componets in both indoor and outdoor conditions
- Ideal for industrial pump controls, waste water, irrigation control along with solar/wind and chemical plants

Standards

- UL 508A Type 1, 2, 3, 4, 4X, 12 and 13
- CSA Type 1, 2, 3, 4, 4X, 12 and 13
- Complies with
  - NEMA Type 1, 2, 3, 4, 4X, 12 and 13
  - IEC 60529, IP66
  - Flamability V-O per UL 94
  - UV rating (f1) per UL746C - UV stabilized for outdoor use
  - Complient with RoHS directive

Construction

- Injection moulded polycarbonate thermoplastic enclosure with matching cover is easily punched, cut, or drilled
- Enhanced UV inhibitors protect against outdoor weathering
- Threaded brass inserts are provided for optional inner panel or terminal kit mounting. Mounting hardware is included
- Stainless steel 316 screw fasteners
- Door fasteners include a provision for padlocking on Snap Latches
- Enclosure available with clear Polycarbonate cover
- Molded hinge with 316 stainless steel pin
- Captive oil resistant gasket provides a positive seal
- Available with Polycarbonate flange or foot mount brackets for multi-directional mounting
- Operating temperatures between 130°C and - 35 °C (266°F to - 31 °F)
- Impact index of 16 J (12 ft/lb)
- For corrosion resistance information, please refer to table in the Technical Information section

Finish

- Polycarbonate material has a Light gray finish
- Optional inner panels are available in white powder coated finished steel or unfinished aluminum, or Fiberglass

Accessories

- Additional Inner Panels...*See Page* ***284***
- Swing Panel...*See Page* ***291***
- Pole Mounting Kit...*See Page* ***309***
- PJ/PJU/PCJ Replacement Hardware Kits...*See Page* ***279***
- Moulded Replacement Polycarbonate Flange...*See Page* ***277***
- Moulded Replacement Polycarbonate Feet...*See Page* ***278***
- Climate Control...*See Page* ***234***
- General Accessories...*See Page* ***268***

Solid Cover		Clear Cover							
w/Flange	w/Feet	w/Flange	w/Feet	Enclosure			Optional Inner Panel		
Part No.	Part No.	Part No.	Part No.	H	W	D	H	W	Part No.
PCJ664HF	PCJ664H	PCJ664CCHF	PCJ664CCH	5.93	6.16	3.98	4.81	4.81	PCJR0505
PCJ864HF	PCJ864H	PCJ864CCHF	PCJ864CCH	7.94	6.16	3.98	6.75	4.88	PCJR0705
PCJ884HF	PCJ884H	PCJ884CCHF	PCJ884CCH	7.94	8.15	3.98	6.75	6.88	PCJR0808
PCJ1082HF	PCJ1082H	PCJ1082CCHF	PCJ1082CCH	9.93	8.15	2.70	8.75	6.88	PCJR0907
PCJ1084HF	PCJ1084H	PCJ1084CCHF	PCJ1084CCH	9.93	8.15	3.98	8.75	6.88	PCJR0907
PCJ1086HF	PCJ1086H	PCJ1086CCHF	PCJ1086CCH	9.93	8.15	5.98	8.75	6.88	PCJR0907
PCJ12104HF	PCJ12104H	PCJ12104CCHF	PCJ12104CCH	11.92	10.15	3.98	10.75	8.88	PCJR1109
PCJ12106HF	PCJ12106H	PCJ12106CCHF	PCJ12106CCH	11.92	10.15	5.98	10.75	8.88	PCJR1109
PCJ14126HF	PCJ14126H	PCJ14126CCHF	PCJ14126CCH	13.94	12.16	5.98	12.75	10.88	PCJR1311
PCJ16148HF	PCJ16148H	PCJ16148CCHF	PCJ16148CCH	15.98	13.98	9.81	14.75	12.88	14R1513
PCJ181610HF	PCJ181610H	PCJ181610CCHF	PCJ181610CCH	18.04	16.04		16.88	14.88	P1868

Alternative inner panel options also available

Distributed by Gross Automation | +1 (262) 252-1600. | hammondsales@grossautomation.com

Technical references and CAD downloads available at www.hammondmfg.com

All dimensions in inches unless specified otherwise

© Hammond Manufacturing

Type 4X Polycarbonate Junction Box (Solid and Clear Cover) *PCJ Series*

Non-Metallic Latch Cover

Quick Link: hammfg.com/PCJ-NSL

Application

- Designed to insulate and protect controls and components in both indoor and outdoor conditions
- Ideal for industrial pump controls, waste water, irrigation control along with solar/wind and chemical plants

Standards

- UL 508A Type 1, 2, 3, 4, 4X, 12 and 13
- CSA Type 1, 2, 3, 4, 4X, 12 and 13
- Complies with
  - NEMA Type 1, 2, 3, 4, 4X, 12 and 13
  - IEC 60529, IP66
  - Flamability V-O per UL 94
  - UV rating (f1) per UL746C - UV stabilized for outdoor use
  - Complient with RoHS directive

Construction

- Injection moulded polycarbonate thermoplastic enclosure with matching cover is easily punched, cut, or drilled
- Enhanced UV inhibitors protect against outdoor weathering
- Threaded brass inserts are provided for optional inner panel or terminal kit mounting. Mounting hardware is included
- Stainless steel 316 screw fasteners
- Door fasteners include a provision for padlocking on Snap Latches
- Enclosure available with clear Polycarbonate cover
- Molded hinge with 316 stainless steel pin
- Captive oil resistant gasket provides a positive seal
- Available with Polycarbonate flange or foot mount brackets for multi-directional mounting
- Operating temperatures between 130°C and - 35 °C (266°F to - 31 °F)
- Impact index of 16 J (12 ft/lb)
- For corrosion resistance information, please refer to table in the Technical Information section

Finish

- Polycarbonate material has a Light gray finish
- Optional inner panels are available in white powder coated finished steel or unfinished aluminum, or Fiberglass

Accessories

- Additional Inner Panels...*See Page* ***284***
- Swing Panel...*See Page* ***291***
- Pole Mounting Kit...*See Page* ***309***
- PJ/PJU/PCJ Replacement Hardware Kits...*See Page* ***279***
- Moulded Replacement Polycarbonate Flange...*See Page* ***277***
- Moulded Replacement Polycarbonate Feet...*See Page* ***278***
- Climate Control...*See Page* ***234***
- General Accessories...*See Page* ***268***

Solid Cover		Clear Cover							
w/Flange	w/Feet	w/Flange	w/Feet	Enclosure			Optional Inner Panel		
Part No.	Part No.	Part No.	Part No.	H	W	D	H	W	Part No.
PCJ664NLF	PCJ664NL	PCJ664CCNLF	PCJ664CCNL	5.93	6.16	3.98	4.81	4.81	PCJR0505
PCJ864NLF	PCJ864NL	PCJ864CCNLF	PCJ864CCNL	7.94	6.16	3.98	6.75	4.88	PCJR0705
PCJ884NLF	PCJ884NL	PCJ884CCNLF	PCJ884CCNL	7.94	8.15	3.98	6.75	6.88	PCJR0808
PCJ1084NLF	PCJ1084NL	PCJ1084CCNLF	PCJ1084CCNL	9.93	8.15	3.98	8.75	6.88	PCJR0907
PCJ1086NLF	PCJ1086NL	PCJ1086CCNLF	PCJ1086CCNL	9.93	8.15	5.98	8.75	6.88	PCJR0907
PCJ12104NLF	PCJ12104NL	PCJ12104CCNLF	PCJ12104CCNL	11.92	10.15	3.98	10.75	8.88	PCJR1109
PCJ12106NLF	PCJ12106NL	PCJ12106CCNLF	PCJ12106CCNL	11.92	10.15	5.98	10.75	8.88	PCJR1109
PCJ14126NLF	PCJ14126NL	PCJ14126CCNLF	PCJ14126CCNL	13.94	12.16	5.98	12.75	10.88	PCJR1311
PCJ16148NLF	PCJ16148NL	PCJ16148CCNLF	PCJ16148CCNL	15.98	13.98	7.81	14.75	12.88	14R1513
PCJ181610NLF	PCJ181610NL	PCJ181610CCNLF	PCJ181610CCNL	18.04	16.04	9.81	16.88	14.88	P1868

Alternative inner panel options also available.

Distributed by: Gross Automation | +1 (262) 252-1600. | hammondsales@grossautomation.com

Technical references and CAD downloads available at www.hammondmfg.com

All dimensions in inches unless specified otherwise

© Hammond Manufacturing

Type 4X Polycarbonate Junction Box (Solid and Clear Cover) *PCJ Series*

Metal Latch Cover

Quick Link: hammfg.com/PCJ-SL

Application

- Designed to insulate and protect controls and componets in both indoor and outdoor conditions
- Ideal for industrial pump controls, waste water, irrigation control along with solar/wind and chemical plants

Standards

- UL 508A Type 1, 2, 3, 4, 4X, 12 and 13
- CSA Type 1, 2, 3, 4, 4X, 12 and 13
- Complies with
  - NEMA Type 1, 2, 3, 4, 4X, 12 and 13
  - IEC 60529, IP66
  - Flamability V-O per UL 94
  - UV rating (f1) per UL746C - UV stabilized for outdoor use
  - Complient with RoHS directive

Construction

- Injection moulded polycarbonate thermoplastic enclosure with matching cover is easily punched, cut, or drilled
- Enhanced UV inhibitors protect against outdoor weathering
- Threaded brass inserts are provided for optional inner panel or terminal kit mounting. Mounting hardware is included
- Stainless steel 316 screw fasteners
- Door fasteners include a provision for padlocking on Snap Latches
- Enclosure available with clear Polycarbonate cover
- Molded hinge with 316 stainless steel pin
- Captive oil resistant gasket provides a positive seal
- Available with Polycarbonate flange or foot mount brackets for multi-directional mounting
- Operating temperatures between 130°C and - 35 °C (266°F to - 31 °F)
- Impact index of 16 J (12 ft/lb)
- For corrosion resistance information, please refer to table in the Technical Information section

Finish

- Polycarbonate material has a Light gray finish
- Optional inner panels are available in white powder coated finished steel or unfinished aluminum, or Fiberglass

Accessories

- Additional Inner Panels...*See Page* ***284***
- Swing Panel...*See Page* ***291***
- Pole Mounting Kit...*See Page* ***309***
- PJ/PJU/PCJ Replacement Hardware Kits...*See Page* ***279***
- Moulded Replacement Polycarbonate Flange...*See Page* ***277***
- Moulded Replacement Polycarbonate Feet...*See Page* ***278***
- Climate Control...*See Page* ***234***
- General Accessories...*See Page* ***268***

Solid Cover		Clear Cover							
w/Flange	w/Feet	w/Flange	w/Feet	Enclosure			Optional Inner Panel		
Part No.	Part No.	Part No.	Part No.	H	W	D	H	W	Part No.
PCJ664LF	PCJ664L	PCJ664CCLF	PCJ664CCL	5.93	6.16	3.98	4.81	4.81	PCJR0505
PCJ864LF	PCJ864L	PCJ864CCLF	PCJ864CCL	7.94	6.16	3.98	6.75	4.88	PCJR0705
PCJ884LF	PCJ884L	PCJ884CCLF	PCJ884CCL	7.94	8.15	3.98	6.75	6.88	PCJR0808
PCJ1082LF	PCJ1082L	PCJ1082CCLF	PCJ1082CCL	9.93	8.15	2.70	8.75	6.88	PCJR0907
PCJ1084LF	PCJ1084L	PCJ1084CCLF	PCJ1084CCL	9.93	8.15	3.98	8.75	6.88	PCJR0907
PCJ1086LF	PCJ1086L	PCJ1086CCLF	PCJ1086CCL	9.93	8.15	5.98	8.75	6.88	PCJR0907
PCJ12104LF	PCJ12104L	PCJ12104CCLF	PCJ12104CCL	11.92	10.15	3.98	10.75	8.88	PCJR1109
PCJ12106LF	PCJ12106L	PCJ12106CCLF	PCJ12106CCL	11.92	10.15	5.98	10.75	8.88	PCJR1109
PCJ14126LF	PCJ14126L	PCJ14126CCLF	PCJ14126CCL	13.94	12.16	5.98	12.75	10.88	PCJR1311
PCJ16148LF	PCJ16148L	PCJ16148CCLF	PCJ16148CCL	15.98	13.98	7.81	14.75	12.88	14R1513
PCJ181610LF	PCJ181610L	PCJ181610CCLF	PCJ181610CCL	18.04	16.04	9.81	16.88	14.88	P1868

Alternative inner panel options also available.

Distributed by Gross Automation | +1 (262) 252-1600. | hammondsales@grossautomation.com

Technical references and CAD downloads available at www.hammondmfg.com

All dimensions in inches unless specified otherwise

© Hammond Manufacturing

Type 4X Fiberglass Junction Box *PJHD Series*

Heavy Duty PJ Snap Latch

Quick Link: hammfg.com/PJHD

Application

- Ideal to insulate and house off grid solar batteries or remote monitoring equipment in outdoor applications
- Especially well suited for high temperature or corrosive environment
- Protects from UV, dirt, dust, oil and water
- Moulded in UV stabilized ultraguard FRP material, with 316 stainless hardware

Part No.	PJHD181610RLF

Features

- Increased wall thickness of .200" (5mm)
- Pad lockable snap latches
- Gasket made of closed cell neoprene core encased in a continuous channel

Dimensions

- Body = 18.24" H x 16.24" W x 10.13" D
- Body and Lid overall Height = 12.1"
- Optional Inner Panels
- P1868 (white painted steel)
- F1868 (fiberglass)
- A1868 (un-finished aluminum)

Distributed by Gross Automation | +1 (262) 252-1600. | hammondsales@grossautomation.com

Technical references and CAD downloads available at www.hammondmfg.com

All dimensions in inches unless specified otherwise

Quality Products. Service Excellence.
© Hammond Manufacturing
Canada: 519.822.2960 or 905.456.3770 USA: 716.630.7030
Data Subject to change without notice

Type 4X Polyester Wallmount Enclosure *PJW Series*

Continuous Hinge Door with Twist Latches and 3 Pt Handle

Quick Link: hammfg.com/PJWL

Application

- Designed for use as instrument enclosures, electric, hydraulic or pneumatic control housings, electrical junction boxes or terminal wiring enclosures.
- Provides outstanding insulation and protection where equipment may be hosed down or be very wet.
- Ideal in applications with high temperatures or highly corrosive environments.

Standards

- UL/cUL 508A Type 1, 2, 3, 4, 4X, 12 and 13
- CSA Type 1, 2, 3, 4, 4X, 12 and 13
- Complies with
  - NEMA Type 1, 2, 3, 4, 4X,12 and 13
  - IEC 60529, IP66

Construction

- Molded fiberglass polyester enclosure with matching cover is easily punched, cut, or drilled.
- Enhanced UV inhibitors protect against outdoor weathering.
- 3/8 collar studs are provided for optional inner panel mounting, hardware included. Note: Sizes 36x36" and larger have 8 collar studs for added stiffness.
- Stainless steel butterfly type "twist latch" door fasteners with padlock provision.
- Captive oil resistant gasket provides a positive seal.
- Integrated mounting flange.
- Operating temperatures between 130°C and -40°C (266°F to -40°F).
- Impact index of 6.78J (5 ft/lb).
- For corrosion resistance information, please refer to table in the Technical Information section.

Finish

- Fiberglass polyester material has a gray finish.
- Optional inner panels are available in white powder coated finished steel.

Accessories

- Additional Inner Panels...*See Page* ***281***
- Pole Mounting Kit...*See Page* ***309***
- Window Kits...*See Page* ***294***
- Climate Control...*See Page* ***234***
- General Accessories...*See Page* ***268***

Latch	3 Pt Handle	Enclosure			Optional Inner Panel		
Part No.	Part No.	H	W	D	H	W	Part No.
PJEC363012T	**PJEC3630123PT**	36.48	30.50	12.18	33.00	27.00	**18P3327**
PJEC363012TW	**PJEC3630123PTW**	36.48	30.50	12.18	33.00	27.00	**18P3327**
PJW363014L	**PJW363014L3PT**	36.25	30.25	14.13	33.00	27.00	**18P3327**
PJW363610L	**PJW363610L3PT**	36.25	36.25	10.13	33.00	33.00	**18P3333**
PJW363614L	**PJW363614L3PT**	36.25	36.25	14.13	33.00	33.00	**18P3333**
PJW483610L	**PJW483610L3PT**	48.25	36.25	10.13	45.00	33.00	**18P4533**
PJW483614L	**PJW483614L3PT**	48.25	36.25	14.13	45.00	33.00	**18P4533**
PJW603610L	**PJW603610L3PT**	60.25	36.25	10.13	57.00	33.00	**18P5733**
PJW603614L	**PJW603614L3PT**	60.25	36.25	14.13	57.00	33.00	**18P5733**

Parts ending in W have window. Alternative inner panel options also available.

Distributed by Gross Automation | 1-(262)-242-1600. | hammondsales@grossautomation.com

Technical references and CAD downloads available at www.hammondmfg.com

All dimensions in inches unless specified otherwise

© Hammond Manufacturing

Type 4X Polyester Wallmount Enclosure *PHW Series*

Continuous Hinge Door with Twist Latches

Quick Link: hammfg.com/PHW

Application

- These enclosures are specially designed to accomodate electrical, electronic, instrumentation and mechanical controls indoors and outdoors.
- For use where corrosion resistant watertight enclosures are needed to provide protection against windblown dust and rain, splashing and hose directed water.

Standards

- UL 508A 1, 3, 3R, 4, 4X, 12
- CSA 1, 3, 3R, 4, 4X, 12
- Complies with
  - NEMA 1, 3, 3R, 4, 4X, 12
  - IEC 60529, IP 66

Construction

- Compression molded, fiberglass reinforced polyester.
- Memory retaining, continuous door gasket standard.
- Molded in panel mounting inserts (except where noted).
- Integral mounting feet.
- Stainless steel hardware.
- Padlocking provision.
- Stainless steel butterfly type “twist latch” door fasteners.
- ported with a continuous hinge.
- For corrosion resistance information, please refer to table in the Technical Information section.

Finish

- Fiberglass reinforced material is finished in light gray.

Accessories

- Additional Inner Panels...*See Page* ***281***
- Window Kits...*See Page* ***294***
- Climate Control...*See Page* ***234***
- General Accessories...*See Page* ***268***

	Enclosure			Optional Inner Panel		
Part No.	H	W	D	H	W	Part No.
PHW20166	22.75	16.87	7.77	17.00	13.00	**18P1713**
PHW20168	22.75	16.87	9.77	17.00	13.00	**18P1713**
PHW201610	22.75	16.87	11.77	17.00	13.00	**18P1713**
PHW201612	22.75	16.87	13.77	17.00	13.00	**18P1713**
PHW241210	26.95	13.72	11.99	21.00	9.00	**18P2109**
PHW24208	27.00	21.24	9.90	21.00	17.00	**18P2117**
PHW242410	27.00	25.25	11.90	21.00	21.00	**18P2121**
PHW30208	32.86	20.99	9.89	27.00	17.00	**18P2717**
PHW302010	32.86	20.99	11.89	27.00	17.00	**18P2717**
PHW30247	33.41	26.32	8.81	27.00	21.00	**18P2721**
PHW302410	33.41	26.32	11.95	27.00	21.00	**18P2721**
PHW302412	33.41	26.32	13.79	27.00	21.00	**18P2721**
PHW363010	39.31	32.50	12.05	33.00	27.00	**18P3327**
PHW363012	39.31	32.50	14.05	33.00	27.00	**18P3327**
PHW483616	51.29	36.62	17.93	45.00	33.00	**18P4533**
PHW603616	63.50	36.50	18.12	57.00	33.00	**18P5733**

Alternative inner panel options also available.

Distributed by Gross Automation | +1 (262) 252-1600. | hammondsales@grossautomation.com

Technical references and CAD downloads available at www.hammondmfg.com

All dimensions in inches unless specified otherwise

© Hammond Manufacturing

Type 4X Polyester Single/Two Door Freestanding Enclosure *PJFS Series*

Continuous Hinge Door with Handle

Quick Link: hammfg.com/PJFS

Application

- Designed for use as instrument enclosures, electric, hydraulic or pneumatic control housings, electrical junction boxes or terminal wiring enclosures.
- Provides outstanding insulation and protection where equipment may be hosed down or be very wet.
- Ideal in applications with high temperatures or highly corrosive environments.

Standards

- UL/cUL 508A Type 1, 2, 3, 4, 4X, 12 and 13
- Complies with
  - IEC 60529, IP66
  - NEMA Type 1, 2, 3, 4, 4X,12 and 13

Construction

- Fiberglass polyester enclosure with matching door is easily punched, cut, or drilled.
- Enhanced UV inhibitors protect against outdoor weathering.
- Collar Studs are provided for optional inner panel(s).
- Two door enclosure accommodates 2 separate inner panels
- Mounting hardware included.
- Heavy duty continuous 304 SS Hinge.
- Flexible self-gripping gasket compresses over flange for tight seal.
- 3-point SS handle with pad lock provision.
- Molded in drip shield.
- Fiberglass mounting strut side walls on double door unit.
- Operating temperatures between 130°C and -40°C (266°F to -40°F).
- Impact index of 6.78J (5 ft/lb).
- For corrosion resistance information, please refer to table in the Technical Information section.

Finish

- Fiberglass polyester material has a gray finish.
- Optional inner panels are available in white powder coated finished steel.

Accessories

- Window Kits...*See Page* ***294***
- Climate Control...*See Page* ***234***
- General Accessories...*See Page* ***268***

	Enclosure			Optional Inner Panel		
Part No.	**H**	**W**	**D**	**H**	**W**	**Part No.**
PJFS722525	72.00	25.00	24.50	57.00	21.00	**18P5721**
PJFS724925DD	72.00	48.00	24.50	57.00	21.00	**18P5721**

DD version is a double door unit. Order 2 inner panels for double door enclosure.

© Hammond Manufacturing

Distributed by Gross Automation | +1 (262) 252-1600. | hammondsales@grossautomation.com

© Hammond Manufacturing

Disconnect Enclosures

Type 4 Mild Steel Wallmount Disconnect Enclosure
1447S HK Series
Continuous Hinge Door (Flange w/ multi-vendor cutout) with Defeater Handle 104

Type 12 Mild Steel Wallmount Disconnect Enclosure
1447S Series
Continuous Hinge Door (Flange w/ multi-vendor cutout) 106

Type 4 Mild Steel Wallmount Disconnect Enclosure
Eclipse Series
Hinge Door with Handle (Flange w/ multi-vendor cutout) 108

Type 4 Mild Steel Wallmount Disconnect Enclosure
1447S N4 Series
Continuous Hinge Door with Clamps (Flange w/ multi-vendor cutout)..... 110

Type 4X Stainless Steel Wallmount Disconnect Enclosure
Eclipse Series
Hinge Door with Handle (Flange w/ multi-vendor cutout) 112

Type 4X Stainless Steel Wallmount Disconnect Enclosure
1447S N4 SS Series
Continuous Hinge Door with Clamps (Flange w/ multi-vendor cutout)..... 113

Type 12 Mild Steel Two Door Wallmount Disconnect Enclosure
2UD Series
Hinge Door with Handle (Flange w/ multi-vendor cutout) 114

Type 12 Mild Steel Two Door Floormount Disconnect Enclosure
2UD F Series
Hinge Door with Handle (Flange w/ multi-vendor cutout) 116

Type 12 Mild Steel Two Door Floormount Disconnect Enclosure
2UD CP F Series
Hinge Door with Handle (Center Post Flange w/ multi-vendor cutout)..... 118

Type 12 Mild Steel Multi-Door Freestanding Disconnect Enclosure
UHD Series
Hinge Door with Handle (Flange w/ multi-vendor cutout) 120

Type 12 Mild Steel Modular Freestanding Disconnect Enclosure
UHD M Series
Hinge Door with Handle (Flange w/ multi-vendor cutout) 122

Type 4X Stainless Steel Multi-Door Freestanding Disconnect Enclosure
UHD SS Series
Hinge Door with Handle (Flange w/ multi-vendor cutout) 124

Distributed by Gross Automation | +1 (262) 252-1600. | hammondsales@grossautomation.com

Technical references and CAD downloads available at www.hammondmfg.com

All dimensions in inches unless specified otherwise

© Hammond Manufacturing

Canada: 519.822.2960 or 905.456.3770 USA: 716.630.7030

Data Subject to change without notice

Type 4 Mild Steel Wallmount Disconnect Enclosure *1447S HK Series*

Continuous Hinge Door (Flange w/ multi-vendor cutout) with Defeater Handle

Quick Link: hammfg.com/1447SHK

Application

- Designed to house the following safety disconnect equipment:
  - ABB Controls flange-mounted variable depth operating mechanism for disconnect switches and circuit breakers. Also cable version for circuit breakers.
  - Allen Bradley 1494V variable depth flange mounted disconnect switches and circuit breaker operators. Will not accept Allen Bradley 1494F disconnect switches, 1494D circuit breaker operators.
  - C-H Westinghouse C361 flange mounted variable depth operating mechanism with disconnect switches and C371 flange mounted variable depth operating mechanisms for circuit breakers. Also Flex-Shaft™ handle mechanisms for circuit breakers.
  - General Electric Type STDA flange handles and variable depth operating mechanism for disconnect switches and circuit breakers. Also SpectraFlex™ cable operators for circuit breakers.
  - Siemens I-T-E Max-Flex™ flange mounted variable depth handles for disconnect switches and circuit breakers.
  - Square D class 9422 disconnect switches with flange mounted variable depth operating mechanisms or cable mechanisms and Class 9422 flange-mounted variable depth operating mechanisms or cable mechanisms for circuit breakers. Will not accept Square D Class 9422 bracket-mounted disconnect devices, 9422TG1 or TG2 devices

Standards

- UL 508A Type 4, 12, and 13
- CSA Type 4, 12, and 13
- Complies with
  - NEMA Type 4, 12 and 13
  - IEC 60529, IP66
  - Appropriate components are required to maintain these standards.

Construction

- Formed 14-gauge steel.
- Continuously welded seams.
- Larger sizes include door and body stiffeners.
- Welded brackets provide for enclosure mounting.
- Formed lip on enclosure exclude flowing liquids and contaminants.
- Seamless poured-in place gasket.
- Cutouts and holes are provided to suit the flange handle operating mechanism.
- Continuously hinged doors may be removed by pulling the hinge pin.
- Pad lock defeater handle mechanism is provided along with latching rods and interlock brackets.
- Collar studs are provided for mounting inner panels.
- A removable 12 gauge inner panel is included.
- A bonding stud is provided on the door and a grounding stud is provided in the enclosure.
- A literature pocket is provided.

Finish

- Cover and enclosure are finished in ANSI61 gray powder coat finish inside and out.
- Inner panel finished in white powder coat finish.

Note

- Disconnects, operating mechanisms are not provided with the enclosure, and must be ordered separately from the manufacturer.

Accessories

- Additional Inner Panels...*See Page* ***281***
- Door Stop Kit...*See Page* ***304***
- Floor Stand Kit...*See Page* ***304***
- Enclosure Stabilizers...*See Page* ***305***
- Drip Shield Kit...*See Page* ***303***
- Window Kits...*See Page* ***294***
- Climate Control...*See Page* ***234***
- Lighting...*See Page* ***298***

Distributed by Gross Automation | +1 (262) 252-1600. | hammondsales@grossautomation.com

Technical references and CAD downloads available at www.hammondmfg.com

All dimensions in inches unless specified otherwise

Quality Products. Service Excellence.

© Hammond Manufacturing

Canada: 519.822.2960 or 905.456.3770 USA: 716.630.7030

Data Subject to change without notice

Type 4 Mild Steel Wallmount Disconnect Enclosure *1447S HK Series*

Continuous Hinge Door (Flange w/ multi-vendor cutout) with Defeater Handle

	Enclosure			Inner Panel	
Part No.	H	W	D	H	D
1447SA8HK	20.00	21.38	8.00	17.00	17.00
1447SB8HK	24.00	21.38	8.00	21.00	17.00
1447SC8HK	24.00	25.38	8.00	21.00	21.00
1447SD8HK	30.00	21.38	8.00	27.00	17.00
1447SE8HK	30.00	25.38	8.00	27.00	21.00
1447SF8HK	36.00	25.38	8.00	33.00	21.00
1447SG8HK	36.00	31.38	8.00	33.00	27.00
1447SH8HK	42.00	31.38	8.00	39.00	27.00
1447SJ8HK	42.00	37.38	8.00	39.00	33.00
1447SK8HK	48.00	37.38	8.00	45.00	33.00
1447SL8HK	60.00	37.38	8.00	57.00	33.00
1447SA10HK	20.00	21.38	10.00	17.00	17.00
1447SB10HK	24.00	21.38	10.00	21.00	17.00
1447SC10HK	24.00	25.38	10.00	21.00	21.00
1447SD10HK	30.00	21.38	10.00	27.00	17.00
1447SE10HK	30.00	25.38	10.00	27.00	21.00
1447SF10HK	36.00	25.38	10.00	33.00	21.00
1447SG10HK	36.00	31.38	10.00	33.00	27.00
1447SH10HK	42.00	31.38	10.00	39.00	27.00
1447SJ10HK	42.00	37.38	10.00	39.00	33.00
1447SQ10HK	48.00	25.40	10.00	45.00	21.00
1447SK10HK	48.00	37.38	10.00	45.00	33.00
1447SL10HK	60.00	37.38	10.00	57.00	33.00
1447SE12HK	30.00	25.38	12.00	27.00	21.00
1447SG12HK	36.00	31.38	12.00	33.00	27.00
1447SH12HK	42.00	31.38	12.00	39.00	27.00
1447SJ12HK	42.00	37.38	12.00	39.00	33.00
1447SK12HK	48.00	37.38	12.00	45.00	33.00
1447SL12HK	60.00	37.38	12.00	57.00	33.00
1447SG16HK	36.00	31.38	16.00	33.00	27.00
1447SH16HK	42.00	31.38	16.00	39.00	27.00
1447SJ16HK	42.00	37.38	16.00	39.00	33.00
1447SK16HK	48.00	37.38	16.00	45.00	33.00
1447SL16HK	60.00	37.38	16.00	57.00	33.00

Distributed by Gross Automation | +1 (262) 252-1600. | hammondsales@grossautomation.com

Technical references and CAD downloads available at www.hammondmfg.com

All dimensions in inches unless specified otherwise

© Hammond Manufacturing

Canada: 519.822.2960 or 905.456.3770 USA: 716.630.7030

Data Subject to change without notice

Type 12 Mild Steel Wallmount Disconnect Enclosure *1447S Series*

Continuous Hinge Door (Flange w/ multi-vendor cutout)

Quick Link: hammfg.com/1447S

Application

- Designed to house the following safety disconnect equipment:
  - ABB Controls flange-mounted variable depth operating mechanism for disconnect switches and circuit breakers. Also cable version for circuit breakers.
  - Allen Bradley 1494V variable depth flange mounted disconnect switches and circuit breaker operators. Will not accept Allen Bradley 1494F disconnect switches, 1494D circuit breaker operators.
  - C-H Westinghouse C361 flange mounted variable depth operating mechanism with disconnect switches and C371 flange mounted variable depth operating mechanisms for circuit breakers. Also Flex-Shaft™ handle mechanisms for circuit breakers.
  - General Electric Type STDA flange handles and variable depth operating mechanism for disconnect switches and circuit breakers. Also SpectraFlex™ cable operators for circuit breakers.
  - Siemens I-T-E Max-Flex™ flange mounted variable depth handles for disconnect switches and circuit breakers.
  - Square D class 9422 disconnect switches with flange mounted variable depth operating mechanisms or cable mechanisms and Class 9422 flange-mounted variable depth operating mechanisms or cable mechanisms for circuit breakers. Will not accept Square D Class 9422 bracket-mounted disconnect devices, 9422TG1 or TG2 devices

Standards

- UL 508A Type 12, 13
- CSA Type 12, 13
- Complies with
  - NEMA Type 12 and 13
  - IEC 60529, IP54
  - Appropriate components are required to maintain these standards.

Construction

- Formed 14-gauge steel.
- Continuously welded seams.
- Larger sizes include door and body stiffeners.
- Welded brackets provide for enclosure mounting.
- Formed lip on door and enclosure exclude flowing liquids and contaminants.
- Cutouts and holes are provided to suit the handle, operating mechanism and door closing mechanism.
- Continuously hinged doors may be removed by pulling the hinge pin.
- Latch pivots and cover interlock brackets are welded to the door.
- Cover latch bars for door handles are provided.
- Collar studs are provided for mounting inner panels.
- A removable 12 gauge inner panel is included.
- Seamless poured-in place gasket.
- A bonding stud is provided on the door and a grounding stud is provided in the enclosure.
- A literature pocket is provided.

Finish

- Cover and enclosure are finished in ANSI61 gray powder coat finish inside and out.
- Inner panel finished in white powder coat finish.
- Disconnects, operating mechanisms and door hardware are not provided with the enclosure, and must be ordered separately from the manufacturer.
- Enclosures with an “A” dimension under 40” require 2 point door closing hardware.
- Enclosures with an “A” dimension 40” or more require 3 point door closing hardware.

Accessories

- Additional Inner Panels...*See Page* ***281***
- Door Stop Kit...*See Page* ***304***
- Floor Stand Kit...*See Page* ***304***
- Enclosure Stabilizers...*See Page* ***305***
- Window Kits...*See Page* ***294***
- Climate Control...*See Page* ***234***
- Lighting...*See Page* ***298***
- General Accessories...*See Page* ***268***

Distributed by Gross Automation | +1 (262) 252-1600. | hammondsales@grossautomation.com

Technical references and CAD downloads available at www.hammondmfg.com

All dimensions in inches unless specified otherwise

Quality Products. Service Excellence.

© Hammond Manufacturing

Canada: 519.822.2960 or 905.456.3770 USA: 716.630.7030

Data Subject to change without notice

Type 12 Mild Steel Wallmount Disconnect Enclosure *1447S Series*

Continuous Hinge Door (Flange w/ multi-vendor cutout)

	Enclosure			Inner Panel	
Part No.	H	W	D	H	W
1447SA8	20.00	21.38	8.00	17.00	17.00
1447SB8	24.00	21.38	8.00	21.00	17.00
1447SC8	24.00	25.38	8.00	21.00	21.00
1447SD8	30.00	21.38	8.00	27.00	17.00
1447SE8	30.00	25.38	8.00	27.00	21.00
1447SF8	36.00	25.38	8.00	33.00	21.00
1447SG8	36.00	31.38	8.00	33.00	27.00
1447SH8	42.00	31.38	8.00	39.00	27.00
1447SJ8	42.00	37.38	8.00	39.00	33.00
1447SK8	48.00	37.38	8.00	45.00	33.00
1447SL8	60.00	37.38	8.00	57.00	33.00
1447SA10	20.00	21.38	10.00	17.00	17.00
1447SB10	24.00	21.38	10.00	21.00	17.00
1447SC10	24.00	25.38	10.00	21.00	21.00
1447SD10	30.00	21.38	10.00	27.00	17.00
1447SE10	30.00	25.38	10.00	27.00	21.00
1447SF10	36.00	25.38	10.00	33.00	21.00
1447SG10	36.00	31.38	10.00	33.00	27.00
1447SH10	42.00	31.38	10.00	39.00	27.00
1447SJ10	42.00	37.38	10.00	39.00	33.00
1447SK10	48.00	37.38	10.00	45.00	33.00
1447SL10	60.00	37.38	10.00	57.00	33.00
1447SE12	30.00	25.38	12.00	27.00	21.00
1447SG12	36.00	31.38	12.00	33.00	27.00
1447SH12	42.00	31.38	12.00	39.00	27.00
1447SJ12	42.00	37.38	12.00	39.00	33.00
1447SK12	48.00	37.38	12.00	45.00	33.00
1447SL12	60.00	37.38	12.00	57.00	33.00
1447S46L12	60.00	37.38	12.00	57.00	34.50
1447SG16	36.00	31.38	16.00	33.00	27.00
1447SK16	48.00	37.38	16.00	45.00	33.00
1447SL16	60.00	37.38	16.00	57.00	33.00

Distributed by Gross Automation | +1 (262) 252-1600. | hammondsales@grossautomation.com

Technical references and CAD downloads available at www.hammondmfg.com

All dimensions in inches unless specified otherwise

© Hammond Manufacturing

Type 4 Mild Steel Wallmount Disconnect Enclosure *Eclipse Series*

Hinge Door with Handle (Flange w/ multi-vendor cutout)

Quick Link: hammfg.com/EN4DSC

Application

- Designed to house the following safety disconnect equipment:
  - ABB Controls flange mounted variable depth operating mechanisms for disconnect switches and circuit breakers. Cable version for circuit breakers also available.
  - Allen Bradley 1494V variable depth flange mounted disconnect switches and circuit breaker operators NEMA 4 rated. Will not accept Allen Bradley 1494F disconnect switches, 1494D circuit breaker operators or 1494V-R1, -R2, or -W2 operating handles).
  - Cutler Hammer C361 variable depth flange mounted disconnect switches and C371 circuit breaker operators. Also Flex-Shaft™ handle mechanisms for circuit breakers. Use Cutler Hammer NEMA 4X rated operating handles to maintain NEMA 4X integrity.
  - Siemens I-T-E Max-Flex™ flange mounted variable depth handles for disconnect switch and circuit breakers. Use handle for NEMA 4 rating.
  - General Electric Type STDA flange handles and variable depth operating mechanisms for disconnect switches and circuit breakers. Also SpectraFlex™ cable operators for circuit breakers.
  - Square D Class 9422 disconnect switches with flange mounted variable depth operating mechanisms or cable mechanisms and Class 9422 flange mounted variable depth operating mechanism or cable mechanisms for circuit breakers. SN4SS enclosures will not accept Square D Class 9422 bracket-mounted disconnect devices, 9422TG1 or TG2 devices.

Standards

- UL 508A Type 3R, 4
- CSA Type 3R, 4
- Complies with
  - NEMA Type 3R, 4, 12 and 13
  - IEC 60529, IP66
- Appropriate components are required to maintain these standards.

Construction

- Formed 14 gauge doors with 16 or 14 (36x32" and larger) gauge steel.
- Continuously welded seams.
- Larger sizes include door stiffeners.
- Formed lip on door and enclosure exclude flowing liquids and contaminants.
- Cutouts and holes are provided to suit the flange handle operating mechanism.
- Doors may be easily removed for modifications and are interchangeable.
- Door is secured with easily operated 2 or 3-point handle.
- Cover interlock bracket is included on the door.
- Collar studs are provided for mounting inner panels.
- Removable inner panel is sold separately.
- Seamless poured-in place gasket.
- A bonding stud is provided on the door and a grounding stud is provided in the enclosure.
- Includes hardware kit with panel mounting nuts and sealing washers for wall mounting holes.
- Disconnects and operating mechanisms are not provided with the enclosure, and must be ordered separately from the manufacturer.

Finish

- Cover and enclosure are finished in recoatable smooth ANSI 61 gray powder coating.

Accessories

- Additional Inner Panels...*See Page* ***282***
- Door Stop Kit...*See Page* ***304***
- Mounting Foot Kit...*See Page* ***277***
- Drip Shield Kit...*See Page* ***303***
- Window Kits...*See Page* ***294***
- Climate Control...*See Page* ***234***
- Lighting...*See Page* ***298***
- General Accessories...*See Page* ***268***

© Hammond Manufacturing

Type 4 Mild Steel Wallmount Disconnect Enclosure *Eclipse Series*

Hinge Door with Handle (Flange w/ multi-vendor cutout)

	Enclosure			Optional Inner Panel		
Part No.	H	W	D	Part No.	H	W
EN4DSC20228GY	20.00	22.00	8.00	**EP2020**	18.17	18.17
EN4DSC24228GY	24.00	22.00	8.00	**EP2420**	22.17	18.17
EN4DSC24268GY	24.00	26.00	8.00	**EP2424**	22.17	22.17
EN4DSC30268GY	30.00	26.00	8.00	**EP3024**	28.17	22.17
EN4DSC36268GY	36.00	26.00	8.00	**EP3624**	34.17	22.17
EN4DSC36328GY	36.00	32.00	8.00	**EP3630**	34.17	28.17
EN4DSC423212GY	42.00	32.00	12.00	**EP4230**	40.17	28.17
EN4DSC423812GY	42.00	38.00	12.00	**EP4236**	40.17	34.17
EN4DSC483812GY	48.00	38.00	12.00	**EP4836**	46.17	34.17
EN4DSC603812GY	60.00	38.00	12.00	**EP6036**	58.17	34.17

Alternative inner panel options also available.

Distributed by Gross Automation | +1 (262) 252-1600. | hammondsales@grossautomation.com

Technical references and CAD downloads available at www.hammondmfg.com

All dimensions in inches unless specified otherwise

© Hammond Manufacturing

Type 4 Mild Steel Wallmount Disconnect Enclosure *1447S N4 Series*

Continuous Hinge Door with Clamps (Flange w/ multi-vendor cutout)

Quick Link: hammfg.com/1447SN4

Application

- Designed to house the following safety disconnect equipment:
  - ABB Controls flange-mounted variable depth operating mechanism for disconnect switches and circuit breakers. Cable version for circuit breakers also available.
  - Allen Bradley 1494V variable depth flange mounted disconnect switches and circuit breaker operators NEMA 4 rated. Will not accept Allen Bradley 1494F disconnect switches, 1494D circuit breaker operators or 1494V-R1, -R2, or -W2 operating handles.
  - C-H Westinghouse C361 variable depth flange mounted disconnect switches and C371 circuit breaker operators, and also Flex-Shaft™ handle mechanism for circuit breakers. Use Cutler Hammer NEMA 4 rated operating handles to maintain NEMA 4 integrity.
  - General Electric Type STDA flange handles and variable depth operating mechanism for disconnect switches and circuit breakers. Also Spectra-Flex™ cable operators for circuit breakers.
  - Siemens I-T-E Max-Flex™ flange mounted variable depth handles for disconnect switches and circuit breakers. Use handle for NEMA 4.
  - Square D class 9422 disconnect switches with flange-mounted variable depth operating mechanisms or cable mechanisms and Class 9422 flange-mounted variable depth operating mechanisms or cable mechanisms for circuit breakers. SN4 enclosures will not accept Square D Class 9422 bracket-mounted disconnect devices, 9422TG1 or TG2 devices.

Standards

- UL 508A Type 3R, 4
- CSA Type 3R, 4
- Complies with
  - NEMA Type 3R, 4, 12
  - IEC 60529, IP66
- Appropriate components are required to maintain these standards.

Construction

- Formed 14 gauge steel.
- Continuously welded seams.
- Larger sizes include door and body stiffeners.
- Welded brackets provide for enclosure mounting.
- Formed lip on door and enclosure exclude flowing liquids and contaminants.
- Cutouts and holes are provided to suit the flange handle operating mechanism.
- Continuously hinged doors may be removed by pulling the stainless steel hinge pin.
- Door is secured with easily operated stainless steel clamps.
- Cover interlock bracket is welded to the door.
- Collar studs are provided for mounting inner panels.
- A removable 12 gauge inner panel is included.
- Seamless poured-in place gasket.
- A bonding stud is provided on the door and a grounding stud is provided in the enclosure.
- A literature pocket is provided for the inside of the door.

Finish

- Disconnects and operating mechanisms are not provided with the enclosure, and must be ordered separately from the manufacturer.

Accessories

- Additional Inner Panels...*See Page* ***281***
- Door Stop Kit...*See Page* ***304***
- Floor Stand Kit...*See Page* ***304***
- Enclosure Stabilizers...*See Page* ***305***
- Drip Shield Kit...*See Page* ***303***
- Door Clamping Hardware...*See Page* ***268***
- Window Kits...*See Page* ***294***
- Climate Control...*See Page* ***234***
- Lighting...*See Page* ***298***
- General Accessories...*See Page* ***268***

© Hammond Manufacturing

Type 4 Mild Steel Wallmount Disconnect Enclosure *1447S N4 Series*

Continuous Hinge Door with Clamps (Flange w/ multi-vendor cutout)

	Enclosure			Inner Panel	
Part No.	H	W	D	H	W
1447SN4B8	24.00	21.38	8.00	21.00	17.00
1447SN4C8	24.00	25.38	8.00	21.00	21.00
1447SN4E8	30.00	25.38	8.00	27.00	21.00
1447SN4F8	36.00	25.38	8.00	33.00	21.00
1447SN4G8	36.00	31.38	8.00	33.00	27.00
1447SN4H12	42.00	31.38	12.00	39.00	27.00
1447SN4J12	42.00	37.38	12.00	39.00	33.00
1447SN4K12	48.00	37.38	12.00	45.00	33.00
1447SN4L12	60.00	37.38	12.00	57.00	33.00

© Hammond Manufacturing

Type 4X Stainless Steel Wallmount Disconnect Enclosure *Eclipse Series*

Hinge Door with Handle (Flange w/ multi-vendor cutout)

Quick Link: hammfg.com/EN4DSCSS

Application

- Designed to house the following safety disconnect equipment:
  - ABB Controls flange mounted variable depth operating mechanisms for disconnect switches and circuit breakers. Cable version for circuit breakers also available.
  - Allen Bradley 1494V variable depth flange mounted disconnect switches and circuit breaker operators NEMA 4 rated. Will not accept Allen Bradley 1494F disconnect switches, 1494D circuit breaker operators or 1494V-R1, -R2, or -W2 operating handles).
  - Cutler Hammer C361 variable depth flange mounted disconnect switches and C371 circuit breaker operators. Also Flex-Shaft™ handle mechanisms for circuit breakers. Use Cutler Hammer NEMA 4X rated operating handles to maintain NEMA 4X integrity.
  - Siemens I-T-E Max-Flex™ flange mounted variable depth handles for disconnect switch and circuit breakers. Use handle for NEMA 4 rating.
  - General Electric Type STDA flange handles and variable depth operating mechanisms for disconnect switches and circuit breakers. Also SpectraFlex™ cable operators for circuit breakers.
  - Square D Class 9422 disconnect switches with flange mounted variable depth operating mechanisms or cable mechanisms and Class 9422 flange mounted variable depth operating mechanism or cable mechanisms for circuit breakers. SN4SS enclosures will not accept Square D Class 9422 bracket-mounted disconnect devices, 9422TG1 or TG2 devices.

Standards

- UL 508A Type 3R, 4 and 4X
- CSA Type 3R, 4 and 4X
- Complies with
  - NEMA Type 3R, 4, 4X, 12 and 13
  - IEC 60529, IP66
- Appropriate components are required to maintain these standards.

Construction

- Formed 14 gauge doors with 16 or 14 (36x32" and larger) gauge type 304 stainless steel.
- Continuously welded seams.
- Larger sizes include door stiffeners.
- Formed lip on door and enclosure exclude flowing liquids and contaminants.
- Cutouts and holes are provided to suit the flange handle operating mechanism.
- Doors may be easily removed for modifications and are interchangeable.
- Door is secured with easily operated 2 or 3 point, padlockable handle.
- Cover interlock bracket is included on the door.
- Collar studs are provided for mounting inner panels.
- Removable inner panel is sold separately.
- Seamless poured-in place gasket.
- A bonding stud is provided on the door and a grounding stud is provided in the enclosure.
- Includes hardware kit with panel mounting nuts and sealing washers for wall mounting holes.

Finish

- Disconnects and operating mechanisms are not provided with the enclosure, and must be ordered separately from the manufacturer.

Accessories

- Additional Inner Panels...*See Page* **282**
- Door Stop Kit...*See Page* **304**
- Mounting Foot Kit...*See Page* **277**
- Climate Control...*See Page* **234**
- Window Kits...*See Page* **294**
- Lighting...*See Page* **298**
- General Accessories...*See Page* **268**

	Enclosure			Optional Inner Panel		
Part No.	H	W	D	Part No.	H	W
EN4DSC20228SS	20.00	22.00	8.00	**EP2020**	18.17	18.17
EN4DSC24228SS	24.00	22.00	8.00	**EP2420**	22.17	18.17
EN4DSC24268SS	24.00	26.00	8.00	**EP2424**	22.17	22.17
EN4DSC30268SS	30.00	26.00	8.00	**EP3024**	28.17	22.17
EN4DSC36268SS	36.00	26.00	8.00	**EP3624**	34.17	22.17
EN4DSC36328SS	36.00	32.00	8.00	**EP3630**	34.17	28.17
EN4DSC423212SS	42.00	32.00	12.00	**EP4230**	40.17	28.17
EN4DSC423812SS	42.00	38.00	12.00	**EP4236**	40.17	34.17
EN4DSC483812SS	48.00	38.00	12.00	**EP4836**	46.17	34.17
EN4DSC603812SS	60.00	38.00	12.00	**EP6036**	58.17	34.17

Alternative inner panel options also available

Distributed by Gross Automation | +1 (262) 252-1600. | hammondsales@grossautomation.com

Technical references and CAD downloads available at www.hammondmfg.com

All dimensions in inches unless specified otherwise

© Hammond Manufacturing

Type 4X Stainless Steel Wallmount Disconnect Enclosure *1447S N4 SS Series*

Continuous Hinge Door with Clamps (Flange w/ multi-vendor cutout)

Quick Link: hammfg.com/1447SN4SS

Application

Inner Panel Included

- Designed to house the following safety disconnect equipment:
  - ABB Controls flange mounted variable depth operating mechanisms for disconnect switches and circuit breakers. Cable version for circuit breakers also available.
  - Allen Bradley 1494V variable depth flange mounted disconnect switches and circuit breaker operators NEMA 4 rated. Will not accept Allen Bradley 1494F disconnect switches, 1494D circuit breaker operators or 1494V-R1, -R2, or -W2 operating handles).
  - Cutler Hammer C361 variable depth flange mounted disconnect switches and C371 circuit breaker operators. Also Flex-Shaft™ handle mechanisms for circuit breakers. Use Cutler Hammer NEMA 4X rated operating handles to maintain NEMA 4X integrity.
  - Siemens I-T-E Max-Flex™ flange mounted variable depth handles for disconnect switch and circuit breakers. Use handle for NEMA 4 rating.
  - General Electric Type STDA flange handles and variable depth operating mechanisms for disconnect switches and circuit breakers. Also SpectraFlex™ cable operators for circuit breakers.
  - Square D Class 9422 disconnect switches with flange mounted variable depth operating mechanisms or cable mechanisms and Class 9422 flange mounted variable depth operating mechanism or cable mechanisms for circuit breakers. SN4SS enclosures will not accept Square D Class 9422 bracket-mounted disconnect devices, 9422TG1 or TG2 devices.

Standards

- UL 508A Type 3R, 4 and 4X
- CSA Type 3R, 4 and 4X
- Complies with
  - NEMA Type 3R, 4, 4X, 12 and 13
  - IEC 60529, IP66
- Appropriate components are required to maintain these standards.

Construction

- Formed 14 gauge type 304 stainless steel.
- Continuously welded seams.
- Larger sizes include door and body stiffeners.
- Formed lip on door and enclosure exclude flowing liquids and contaminants.
- Cutouts and holes are provided to suit the flange handle operating mechanism.
- Continuously hinged doors may be removed by pulling the stainless steel hinge pin.
- Door is secured with easily operated stainless steel clamps.
- Cover interlock bracket is welded to the door.
- Collar studs are provided for mounting inner panels.
- A removable 12 gauge inner panel is included.
- Seamless poured-in place gasket.
- A bonding stud is provided on the door and a grounding stud is provided in the enclosure.
- A literature pocket is provided for the inside of the door.

Finish

- Disconnects and operating mechanisms are not provided with the enclosure, and must be ordered separately from the manufacturer.

Accessories

- Additional Inner Panels...*See Page* ***281***
- Door Stop Kit...*See Page* ***304***
- Floor Stand Kit...*See Page* ***304***
- Drip Shield Kit...*See Page* ***303***
- Door Clamping Hardware...*See Page* ***268***
- Window Kits...*See Page* ***294***
- Climate Control...*See Page* ***234***
- Lighting...*See Page* ***298***
- General Accessories...*See Page* ***268***

	Enclosure			Inner Panel	
Part No.	H	W	D	H	W
1447SN4SSB8	24.00	21.38	8.00	21.00	17.00
1447SN4SSC8	24.00	25.38	8.00	21.00	21.00
1447SN4SSE8	30.00	25.38	8.00	27.00	21.00
1447SN4SSF8	36.00	25.38	8.00	33.00	21.00
1447SN4SSG8	36.00	31.38	8.00	33.00	27.00
1447SN4SSH12	42.00	31.38	12.00	39.00	27.00
1447SN4SSJ12	42.00	37.38	12.00	39.00	33.00
1447SN4SSK12	48.00	37.38	12.00	45.00	33.00
1447SN4SSL12	60.00	37.38	12.00	57.00	33.00

Distributed by Gross Automation | +1 (262) 502-1600. | hammondsales@grossautomation.com

Technical references and CAD downloads available at www.hammondmfg.com

All dimensions in inches unless specified otherwise

© Hammond Manufacturing

Canada: 519.822.2960 or 905.456.3770 USA: 716.630.7030

Data Subject to change without notice

Type 12 Mild Steel Two Door Wallmount Disconnect Enclosure *2UD Series*

Hinge Door with Handle (Flange w/ multi-vendor cutout)

Quick Link: hammfg.com/2UD

Application

- Designed to accept the following disconnect switches and circuit breakers:
  - ABB Controls flange mounted variable depth operating mechanisms for disconnect switches and circuit breakers.
  - Allen Bradley 1494F flange mounted disconnect switches and 1494D flange mounted operators for circuit breakers. Allen Bradley 1494V variable depth flange mounted disconnect switches and circuit breaker mechanisms.
  - C-H Westinghouse Type C361 disconnect swtches and operator mechanisms, and type C371 circuit breakers and circuit breaker operating mechanisms. Flex ShaftTM handle operators for circuit breakers.
  - General Electric Type STDA flange handles and variable depth operating mechanisms for disconnect switches and circuit breakers. Also Spectra-Flex™ cable operators for circuit breakers.
  - Siemens I-T-E Max-Flex™ flange mounted variable depth operating handles for disconnect switches and circuit breakers.
  - Square D disconnect switches and circuit breakers used with Class 9422 flange mounted variable depth operating mechanisms or cable mechanisms. These enclosures will not receive Class 9422 bracket mounted disconnect devices, Class 9422TG1, or TG2 devices.

Operator Adaptor Kits

- All universal series enclosures require one adaptor kit (ordered separately) to adapt the type of disconnect and mechanism to be used.
- Each brand and type requires a different adaptor kit.
- Each kit contains an adaptor plate and master door interlocking mechanism.
- Fully detailed, illustrated instructions are included.

Standards

- UL 508A Type 12
- CSA Type 12
- Complies with
  - NEMA Type 12 and 13
  - IEC 60529, IP54
- Appropriate components are required to maintain these standards.

Construction

- Formed from 10 gauge steel with smooth, continuously welded seams.
- Body stiffeners are included in the larger enclosures for extra rigidity.
- Heavy duty lifting eyes are anchored into reinforced top corners.
- Flange trough collar (FTC) around door opening excludes liquids and contaminants.
- Removable doors are secured with heavy duty lift-off hinges.
- Formed 10 gauge steel inner panels are provided on collar studs.
- Panel supports are provided.

Distributed by Gross Automation | +1 (262) 252-1600. | hammondsales@grossautomation.com

Technical references and CAD downloads available at www.hammondmfg.com

All dimensions in inches unless specified otherwise

© Hammond Manufacturing

Type 12 Mild Steel Two Door Wallmount Disconnect Enclosure *2UD Series*

Hinge Door with Handle (Flange w/ multi-vendor cutout)

- Center post is removable, providing easy panel installation.
- Heavy duty three point latching mechanism with heavy duty roller ends is provided for ease of door closing.
- Oil resistant gaskets are permanently secured.
- The right hand door is the master door.
- Master door handle complete with screw defeater and padlock hasp.
- Slave door handle complete with padlock hasp.
- A mechanical interlock activated by the master door prevents the auxiliary door from being opened first.
- The universal flange cutout provides mounting for disconnect operators by use of the appropriate operator adaptor kit.
- A provision for mounting fluorescent lighting is provided.
- A bonding stud is provided in the door and a grounding stud is provided in the enclosure for each door.
- A literature pocket is provided for the inside of the door.

Note

- Disconnect switches, circuit breakers and operators are not provided with the enclosure, and must be ordered separately from the manufacturer.

Finish

- Door and enclosure are phosphatized and finished in ANSI 61 gray recoatable powder coating on the outside.
- Enclosure interior is finished in white powder coating.
- Inner panel is finished in white powder coating.

Accessories

- Flange Disconnect Operator Adaptor Kits...*See Page* ***302***
- Additional Inner Panels...*See Page* ***283***
- Door Stop Kit...*See Page* ***304***
- Floor Stand Kit...*See Page* ***304***
- Window Kits...*See Page* ***294***
- Climate Control...*See Page* ***234***
- Lighting...*See Page* ***298***
- General Accessories...*See Page* ***268***

	Enclosure			Inner Panel	
Part No.	H	W	D	H	W
2UD605012FTC	60.13	50.00	12.13	56.00	44.00
2UD606212FTC	60.13	62.00	12.13	56.00	56.00
2UD726212FTC	72.13	62.00	12.13	68.00	56.00
2UD727412FTC	72.13	74.00	12.13	68.00	68.00

© Hammond Manufacturing

Type 12 Mild Steel Two Door Floormount Disconnect Enclosure *2UD F Series*

Hinge Door with Handle (Flange w/ multi-vendor cutout)

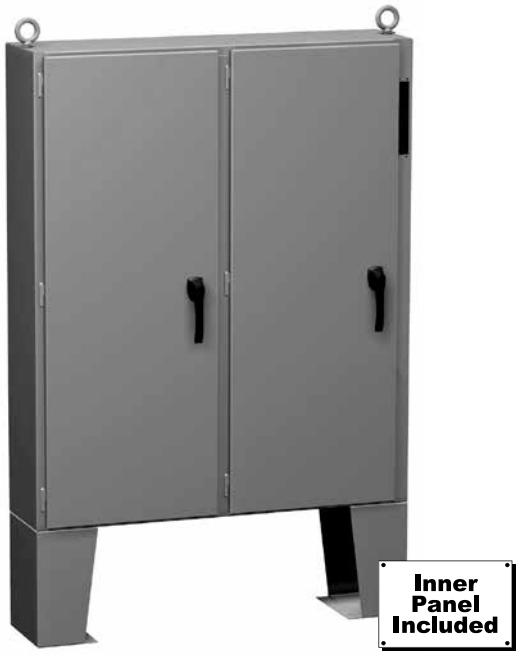

Quick Link: hammfg.com/2UDF

Application

- Designed to accept the following disconnect switches and circuit breakers:
  - ABB Controls flange mounted variable depth operating mechanisms for disconnect switches and circuit breakers.
  - Allen Bradley 1494F flange mounted disconnect switches and 1494D flange mounted operators for circuit breakers. Allen Bradley 1494V variable depth flange mounted disconnect switches and circuit breaker mechanisms.
  - C-H Westinghouse Type C361 disconnect swtches and operator mechanisms, and type C371 circuit breakers and circuit breaker operating mechanisms. Flex ShaftTM handle operators for circuit breakers.
  - General Electric Type STDA flange handles and variable depth operating mechanisms for disconnect switches and circuit breakers. Also Spectra-Flex™ cable operators for circuit breakers.
  - Siemens I-T-E Max-Flex™ flange mounted variable depth operating handles for disconnect switches and circuit breakers.
  - Square D disconnect switches and circuit breakers used with Class 9422 flange mounted variable depth operating mechanisms or cable mechanisms. These enclosures will not receive Class 9422 bracket mounted disconnect devices, Class 9422TG1, or TG2 devices.

Operator Adaptor Kits

- All universal series enclosures require one adaptor kit (ordered separately) to adapt the type of disconnect and mechanism to be used.
- Each brand and type requires a different adaptor kit.
- Each kit contains an adaptor plate and master door interlocking mechanism.
- Fully detailed, illustrated instructions are included.

Standards

- UL 508A Type 12
- CSA Type 12
- Complies with
  - NEMA Type 12
  - IEC 60529, IP54
- Appropriate components are required to maintain these standards.

Construction

- Formed from 10 gauge steel with smooth, continuously welded seams.
- Body stiffeners are included in the larger enclosures for extra rigidity.
- Flange trough collar (FTC) around door opening excludes liquids and contaminants.
- 15” floor stands are welded to the enclosure.
- Removable doors are secured with heavy duty lift-off hinges.
- Formed 10 gauge steel inner panels are provided on collar studs.
- Panel supports are provided.
- Center post is removable, providing easy panel installation.
- Heavy duty three point latching mechanism with heavy duty roller ends is provided for ease of door closing.
- Oil resistant gaskets are permanently secured.
- The right hand door is the master door.
- Master door handle complete with screw defeater and padlock hasp.
- Slave door handle complete with padlock hasp.
- A mechanical interlock activated by the master door prevents the auxiliary door from being opened first.
- The universal flange cutout provides mounting for disconnect operators by use of the appropriate operator adaptor kit.
- A provision for mounting fluorescent lighting is provided.
- A bonding stud is provided in the door and a grounding stud is provided in the enclosure for each door.
- A literature pocket is provided.

Note

- Disconnect switches, circuit breakers and operators are not provided with the enclosure, and must be ordered separately from the manufacturer.

Distributed by Gross Automation | +1 (262) 252-1600. | hammondsales@grossautomation.com

Technical references and CAD downloads available at www.hammondmfg.com

All dimensions in inches unless specified otherwise

Quality Products. Service Excellence.
© Hammond Manufacturing
Canada: 519.822.2960 or 905.456.3770 USA: 716.630.7030
Data Subject to change without notice

Type 12 Mild Steel Two Door Floormount Disconnect Enclosure *2UD F Series*

Hinge Door with Handle (Flange w/ multi-vendor cutout)

Finish

- Cover and enclosure are phosphatized and finished in recoatable smooth ANSI 61 gray powder coating.
- Inner panel is finished in white powder coating.

Accessories

- Flange Disconnect Operator Adaptor Kits...*See Page* ***302***
- Additional Inner Panels...*See Page* ***283***
- Door Stop Kit...*See Page* ***304***
- Window Kits...*See Page* ***294***
- Climate Control...*See Page* ***234***
- Lighting...*See Page* ***298***
- General Accessories...*See Page* ***268***

	Enclosure			Inner Panel	
Part No.	H	W	D	H	W
2UD605012FFTC	60.13	50.00	12.13	56.00	44.00
2UD605018FFTC	60.13	50.00	18.13	56.00	44.00
2UD606212FFTC	60.13	62.00	12.13	56.00	56.00
2UD606218FFTC	60.13	62.00	18.13	56.00	56.00
2UD726212FFTC	72.13	62.00	12.13	68.00	56.00
2UD726218FFTC	72.13	62.00	18.13	68.00	56.00
2UD727412FFTC	72.13	74.00	12.13	68.00	68.00
2UD727418FFTC	72.13	74.00	18.13	68.00	68.00
2UD727424FFTC	72.13	74.00	24.13	68.00	68.00

© Hammond Manufacturing

Type 12 Mild Steel Two Door Floormount Disconnect Enclosure *2UD CP F Series*

Hinge Door with Handle (Center Post Flange w/ multi-vendor cutout)

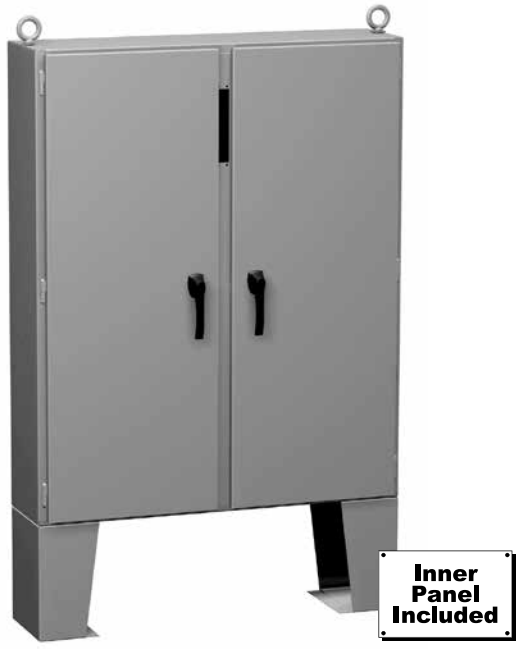

Quick Link: hammfg.com/2UDCPF

Application

- Designed to accept the following disconnect switches and circuit breakers:
  - ABB Controls flange mounted variable depth operating mechanisms for disconnect switches and circuit breakers.
  - Allen Bradley 1494F flange mounted disconnect switches and 1494D flange mounted operators for circuit breakers. Allen Bradley 1494V variable depth flange mounted disconnect switches and circuit breaker mechanisms.
  - C-H Westinghouse Type C361 disconnect swtches and operator mechanisms, and type C371 circuit breakers and circuit breaker operating mechanisms. Flex ShaftTM handle operators for circuit breakers.
  - General Electric Type STDA flange handles and variable depth operating mechanisms for disconnect switches and circuit breakers. Also Spectra-Flex™ cable operators for circuit breakers.
  - Siemens I-T-E Max-Flex™ flange mounted variable depth operating handles for disconnect switches and circuit breakers.
  - Square D disconnect switches and circuit breakers used with Class 9422 flange mounted variable depth operating mechanisms or cable mechanisms. These enclosures will not receive Class 9422 bracket mounted disconnect devices, Class 9422TG1, or TG2 devices.

Standards

- UL 508A Type 12
- CSA Type 12
- Complies with
  - NEMA Type 12
  - IEC 60529, IP54
- Appropriate components are required to maintain these standards.

Construction

- Formed from 10 gauge steel with smooth, continuously welded seams.
- Body stiffeners are included in the larger enclosures for extra rigidity.
- 15” floor stands are welded to the enclosure.
- Flange trough Collar (FTC) around door opening excludes liquids and contaminants.
- Heavy duty lifting eyes are anchored into reinforced top corners.
- Removable doors are secured with heavy duty lift-off hinges.
- Formed 10 gauge steel inner panels are provided on collar studs.
- Panel supports are provided.
- Center post is removable, providing easy panel installation.
- Heavy duty three point latching mechanism with heavy duty roller ends is provided for ease of door closing.
- Oil resistant gaskets are permanently secured.
- The left door is the master door.
- Master door handle complete with screw defeater and padlock hasp.
- Slave door handle complete with padlock hasp.
- A mechanical interlock activated by the master door prevents the auxiliary door from being opened first.
- The universal flange cutout provides mounting for disconnect operators by use of the appropriate operator adaptor kit.
- A provision for mounting fluorescent lighting is provided.
- A bonding stud is provided in the door and a grounding stud is provided in the enclosure for each door.
- A literature pocket is provided.

Note

- Disconnect switches, circuit breakers and operators are not provided with the enclosure, and must be ordered separately from the manufacturer.

Finish

- Cover and enclosure are phosphatized and finished in recoatable smooth ANSI 61 gray powder coating.
- Inner panel is finished in white powder coating.

Distributed by Gross Automation | +1 (262) 252-1600. | hammondsales@grossautomation.com

Technical references and CAD downloads available at www.hammondmfg.com

All dimensions in inches unless specified otherwise

Quality Products. Service Excellence.

© Hammond Manufacturing

Canada: 519.822.2960 or 905.456.3770 USA: 716.630.7030

Data Subject to change without notice

Type 12 Mild Steel Two Door Floormount Disconnect Enclosure *2UD CP F Series*

Hinge Door with Handle (Center Post Flange w/ multi-vendor cutout)

Accessories

- Flange Disconnect Operator Adaptor Kits...*See Page* ***302***
- Additional Inner Panels...*See Page* ***283***
- Door Stop Kit...*See Page* ***304***
- Window Kits...*See Page* ***294***
- Climate Control...*See Page* ***234***
- Lighting...*See Page* ***298***
- General Accessories...*See Page* ***268***

	Enclosure			Inner Panel	
Part No.	H	W	D	H	W
2UDCP604912FFTC	60.13	48.88	12.13	56.00	44.00
2UDCP606112FFTC	60.13	60.88	12.13	56.00	56.00
2UDCP726112FFTC	72.13	60.88	12.13	68.00	56.00
2UDCP727312FFTC	72.13	72.88	12.13	68.00	68.00
2UDCP727318FFTC	72.13	72.88	18.13	68.00	68.00

Distributed by Gross Automation | +1 (262) 252-1600. | hammondsales@grossautomation.com

Technical references and CAD downloads available at www.hammondmfg.com

All dimensions in inches unless specified otherwise

© Hammond Manufacturing

Canada: 519.822.2960 or 905.456.3770 USA: 716.630.7030

Data Subject to change without notice

Type 12 Mild Steel Multi-Door Freestanding Disconnect Enclosure *UHD Series*

Hinge Door with Handle (Flange w/ multi-vendor cutout)

Quick Link: hammfg.com/UHD

Application

- Designed to accept the following disconnect switches and circuit breakers:
  - ABB Controls flange mounted variable depth operating mechanisms for disconnect switches and circuit breakers.
  - Allen Bradley 1494F flange mounted disconnect switches and 1494D flange mounted operators for circuit breakers. Allen Bradley 1494V variable depth flange mounted disconnect switches and circuit breaker mechanisms.
  - C-H Westinghouse type C361 disconnect switches and operator mechanism. Cutler Hammer Type C371 circuit breaker operating mechanisms. Flex-Shaft™ handle operators for circuit breakers.
  - General Electric type STDA flange handles and variable depth operating mechanisms for disconnect switches and circuit breakers. Also Spectra-Flex™ cable operators for circuit breakers.
  - Siemens I-T-E Max-Flex™ flange mounted variable depth operating handles for disconnect switches and circuit breakers.
  - Square D disconnect switches and circuit breakers used with Class 9422 flange mounted variable depth operating mechanisms or cable mechanisms. These enclosures will not receive Class 9422 bracket mounted disconnect devices or class 9422TG1 or TG2 devices.

Standards

- UL 508A Type 12
- CSA Type 12
- Complies with
  - NEMA Type 12
  - IEC 60529, IP54
- Appropriate components are required to maintain these standards.

Construction

- Formed from 10 gauge steel with smooth, continuously welded seams.
- Body stiffeners are provided in the larger enclosures for extra rigidity.
- Flange trough collar (FTC) around door opening excludes liquids and contaminants.
- Heavy duty lifting eyes are anchored into reinforced top corners.
- Removable doors are secured with heavy duty lift off hinges.
- Formed 10 gauge steel inner panels are provided on collar studs.
- Panel supports are provided.
- Center post is removable, providing easy panel installation.
- Heavy duty three point latching mechanism with heavy duty roller ends is provided for ease of door closing.
- Oil resistant gaskets are permanently secured.
- The right-hand door on all enclosures is the master door.
- Master door handle complete with screw defeater and padlock hasp.
- Slave door handle complete with padlock hasp.
- A mechanical interlock activated by the master door prevents the auxiliary door from being opened first.
- The universal flange cutout provides mounting for disconnect operators by use of the appropriate operator adaptor kit.
- A provision for mounting fluorescent lighting is provided.
- A bonding stud is provided in the door and a grounding stud is provided in the enclosure for each door.
- A literature pocket is provided for the inside of the door.

Note:

- Disconnect switches, circuit breakers and operators are not provided with the enclosure, and must be ordered separately from the manufacturer.

© Hammond Manufacturing

Type 12 Mild Steel Multi-Door Freestanding Disconnect Enclosure *UHD Series*

Hinge Door with Handle (Flange w/ multi-vendor cutout)

Finish

- Cover and enclosure are phosphatized and finished in recoatable smooth ANSI 61 gray powder coating.
- Inner panel is finished in white powder coating.

Accessories

- Flange Disconnect Operator Adaptor Kits...*See Page* ***302***
- Door Stop Kit...*See Page* ***304***
- Floor Stand Kit...*See Page* ***304***
- Window Kits...*See Page* ***294***
- Climate Control...*See Page* ***234***
- Lighting...*See Page* ***298***
- General Accessories...*See Page* ***268***

Single Door

	Enclosure			Inner Panel	
Part No.	H	W	D	H	W
1UHD722918FTC	72.13	28.75	18.13	60.00	21.75
1UHD723518FTC	72.13	34.75	18.13	60.00	27.75
1UHD724118FTC	72.13	40.75	18.13	60.00	33.75
1UHD844118FTC	84.13	40.75	18.13	72.00	33.75
1UHD844124FTC	84.13	40.75	24.13	72.00	33.75
1UHD904118FTC	90.13	40.75	18.13	78.00	33.75
1UHD904120FTC	90.13	40.75	20.13	78.00	33.75
1UHD904124FTC	90.13	40.75	24.13	78.00	33.75

2 Door

	Enclosure			Inner Panel	
Part No.	H	W	D	H	W
2UHD725518FTC	72.13	55.00	18.13	60.00	48.00
2UHD726718FTC	72.13	67.00	18.13	60.00	60.00
2UHD727918FTC	72.13	79.00	18.13	60.00	72.00
2UHD727924FTC	72.13	79.00	24.13	60.00	72.00
2UHD847918FTC	84.13	79.00	18.13	72.00	72.00
2UHD847924FTC	84.13	79.00	24.13	72.00	72.00
2UHD907918FTC	90.13	79.00	18.13	78.00	72.00
2UHD907920FTC	90.13	79.00	20.13	78.00	72.00
2UHD907924FTC	90.13	79.00	24.13	78.00	72.00

3 Door

	Enclosure			Inner Panels		
Part No.	H	W	D	H	W1	W2
3UHD7210118FTC	72.13	100.25	18.13	60.00	27.75	60.00
3UHD7211918FTC	72.13	118.25	18.13	60.00	33.75	72.00
3UHD8411918FTC	84.13	118.25	18.13	72.00	33.75	72.00
3UHD8411924FTC	84.13	118.25	24.13	72.00	33.75	72.00
3UHD9011924FTC	90.13	118.25	24.13	78.00	33.75	72.00

4 Door

	Enclosure			Inner Panels		
Part No.	H	W	D	H	W1	W2
4UHD8415718FTC	84.13	156.50	18.13	72.00	72.00	72.00
4UHD9015718FTC	90.13	156.50	18.13	78.00	72.00	72.00

Distributed by Gross Automation (262) 252-1600 hammondsales@grossautomation.com

Technical references and CAD downloads available at www.hammondmfg.com

All dimensions in inches unless specified otherwise

© Hammond Manufacturing

Type 12 Mild Steel Modular Freestanding Disconnect Enclosure *UHD M Series*

Hinge Door with Handle (Flange w/ multi-vendor cutout)

Inner Panel Included

Quick Link: hammfg.com/UHDM

Application

- Designed to bolt together in any number of units for maximum flexibility and ease of transportation. The UHDM system consists of a Master enclosure to house the flange mounted disconnect switch and interlocking Slave enclosures which may be added or removed as required. Master enclosure units will accept the following disconnect switches and circuit breakers:
  - ABB Controls flange mounted variable depth operating mechanism for disconnect switches and circuit breakers.
  - Allen Bradley 1494F flange mounted disconnect switches and 1494D flange mounted operators for circuit breakers. Allen Bradley 1494V variable depth flange operated disconnect switches and circuit breaker mechanisms.
  - C-H Westinghouse Type C361 disconnect switches and operator mechanism. Cutler Hammer Type C371 circuit breaker operating mechanisms. Flex Shaft™ handle operators for circuit breakers.
  - General Electric Type STDA flange handles and variable depth operating mechanisms for disconnect switches and circuit breakers. Also Spectra-Flex™ cable operators for circuit breakers.
  - I-T-E Max-Flex™ flange mounted variable depth operating handles for disconnect switches and circuit breakers.
  - Square D disconnect switches and circuit breakers used with Class 9422 flange mounted variable depth operating mechanisms or cable mechanisms. These enclosures will not receive Class 9422 bracket mounted disconnect devices or Class 9422TG1 or TG2 devices.

Standards

- UL 508A Type 12
- CSA Type 12
- Complies with
  - NEMA Type 12
  - IEC 60529, IP54
- Appropriate components are required to maintain these standards.

Construction

- Formed from 10 gauge steel with smooth continuously welded seams.
- Body stiffeners are provided in the larger enclosures for extra rigidity.
- Heavy duty lifting eyes are anchored into reinforced top corners.
- Removable doors are secured with heavy duty lift off hinges.
- Flange trough collar (FTC) around door excludes liquids and contaminants.
- Formed 10 gauge steel inner panels are provided on collar studs.
- Panel supports are provided.
- Center post is removable, providing easy panel installation.
- Heavy duty three point latching door mechanism.
- Side openings are reinforced to provide structural strength, smooth edges and preset gasket compression.
- Oil resistant gaskets on doors and side openings are permanently secured. No gasket kit is provided.
- Master door handle complete with screw defeater and padlock hasp.
- Slave door handle complete with padlock hasp.
- A mechanical interlock activated by the master door prevents the auxiliary door from being opened first.
- The universal flange cutout provides mounting for disconnect operators by use of the appropriate operator adaptor kit.
- A bonding stud is provided in the door and a grounding stud is provided in the enclosure for each door.
- A literature pocket is provided.

Distributed by Gross Automation | +1 (262) 252-1600. | hammondsales@grossautomation.com

Technical references and CAD downloads available at www.hammondmfg.com

All dimensions in inches unless specified otherwise

Quality Products. Service Excellence.
© Hammond Manufacturing
Canada: 519.822.2960 or 905.456.3770 USA: 716.630.7030
Data Subject to change without notice

Type 12 Mild Steel Modular Freestanding Disconnect Enclosure *UHD M Series*

Hinge Door with Handle (Flange w/ multi-vendor cutout)

- Formed End Plates and Flat End Plates
  - Formed from 12 gauge steel.
  - Used to enclose the open end(s) of one or more modular enclosures.
  - Two types are available. No separate gasket kit is required.
- Flat Barrier Plate
  - Formed from 14 gauge steel.
  - May be used to provide a barrier between modular enclosures. They are supplied complete with gasket.
- Panel Bridge Kit
  - Formed from 10 gauge steel.
  - May be used to join back panels together between modular enclosures to provide a continuous panel surface.

Note:

- Disconnect switches, circuit breakers and operators are not provided with the enclosure, and must be ordered separately from the manufacturer.

Finish

- Cover and enclosure are phosphatized and finished in recoatable smooth ANSI 61 gray powder coating.
- Inner panel is finished in white powder coating.

Accessories

- Flange Disconnect Operator Adaptor Kits...*See Page* ***302***
- Door Stop Kit...*See Page* ***304***
- Floor Stand Kit...*See Page* ***304***
- Window Kits...*See Page* ***294***
- Climate Control...*See Page* ***234***
- Lighting...*See Page* ***298***
- General Accessories...*See Page* ***268***

Master Enclosures

Left Side Open	Enclosure			Inner Panel		Door
Part No.	H	W	D	H	W	Type
UHDM724118MFTC	72.13	40.75	18.13	60.00	33.75	Single
UHDM844118MFTC	84.13	40.75	18.13	72.00	33.75	Single
UHDM844124MFTC	84.13	40.75	24.13	72.00	33.75	Single
UHDM727918MFTC	72.13	79.00	18.13	60.00	72.00	Double
UHDM847918MFTC	84.13	79.00	18.13	72.00	72.00	Double
UHDM847924MFTC	84.13	79.00	24.13	72.00	72.00	Double

Slave Enclosures

Both Sides Open	Enclosure			Inner Panel		Door
Part No.	H	W	D	H	W	Type
UHDM724118SFTC	72.13	40.25	18.13	60.00	33.75	Single
UHDM844118SFTC	84.13	40.25	18.13	72.00	33.75	Single
UHDM844124SFTC	84.13	40.25	24.13	72.00	33.75	Single
UHDM727818SFTC	72.13	78.50	18.13	60.00	72.00	Double
UHDM847818SFTC	84.13	78.50	18.13	72.00	72.00	Double
UHDM847824SFTC	84.13	78.50	24.13	72.00	72.00	Double

Accessories

Part No.	H	W	Description
UHDM7218ECA	71.86	17.87	Formed end plate with mounting hardware
UHDM8418ECA	83.87	17.87	Formed end plate with mounting hardware
UHDM8424ECA	83.87	23.87	Formed end plate with mounting hardware
UHDM7218EPA	71.87	17.87	Flat end plate with mounting hardware
UHDM8418EPA	83.87	17.87	Flat end plate with mounting hardware
UHDM8424EPA	83.87	23.87	Flat end plate with mounting hardware
UHDM7218BPA	71.87	17.87	Flat barrier plate with mounting hardware
UHDM8418BPA	83.87	17.87	Flat barrier plate with mounting hardware
UHDM8424BPA	83.87	21.87	Flat barrier plate with mounting hardware
UHDMFTC72BK	60.00	-	Inner panel bridge kit
UHDMFTC84BK	72.00	-	Inner panel bridge kit

Distributed by Grossa Automation | +1 (262) 252-1600. | hammondsales@grossautomation.com

Technical references and CAD downloads available at www.hammondmfg.com

All dimensions in inches unless specified otherwise

© Hammond Manufacturing

Type 4X Stainless Steel Multi-Door Freestanding Disconnect Enclosure *UHD SS Series*

Hinge Door with Handle (Flange w/ multi-vendor cutout)

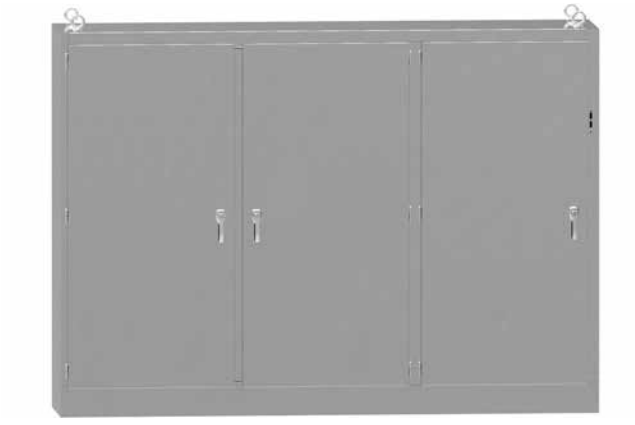

Inner Panel Included

Quick Link: hammfg.com/UHDSS

Application

- Designed to accept the following disconnect switches and circuit breakers:
  - ABB Controls flange mounted variable depth operating mechanisms for disconnect switches and circuit breakers.
  - Allen Bradley 1494V and 1494U variable depth flange mounted disconnect switches and circuit breaker mechanisms. NOT COMPATIBLE WITH 1494V-R1, R2, W2 operating handles nor with Allen Bradley 1494F flange mounted disconnect switches and 1494D flange mounted operators for circuit breakers.
  - C-H Westinghouse type C361 disconnect switches and operator mechanism. Cutler Hammer Type C371 circuit breaker operating mechanisms. Flex-Shaft™ handle operators for circuit breakers.
  - General Electric type STDA flange handles and variable depth operating mechanisms for disconnect switches and circuit breakers. Also Spectra-Flex™ cable operators for circuit breakers.
  - Siemens I-T-E Max-Flex™ flange mounted variable depth operating handles for disconnect switches and circuit breakers.
  - Square D disconnect switches and circuit breakers used with Class 9422 flange mounted variable depth operating mechanisms or cable mechanisms. These enclosures will not receive Class 9422 bracket mounted disconnect devices or class 9422TG1 or TG2 devices. NOT COMPATIBLE WITH Class 9422 bracket mounted devices nor Class 9422TG1/TG2 devices.

Standards

- UL 508A Type 3R, 12, 4, 4X
- CSA Type 3R, 12, 4, 4X
- Complies with
  - NEMA Type 3R, 12, 13, 4, 4X
  - IEC 60529, IP66
- Appropriate components are required to maintain these standards.

Construction

- Formed from 12 gauge 304 stainless steel with smooth, continuously welded seams.
- Body stiffeners are provided in the larger enclosures for extra rigidity.
- Flange trough collar (FTC) around door opening excludes liquids and contaminants.
- Heavy duty lifting eyes are anchored into reinforced top corners.
- Removable doors are secured with heavy duty lift off hinges.
- Formed 10 gauge steel inner panels are provided on collar studs.
- Panel supports are provided.
- Center post is removable, providing easy panel installation.
- Heavy duty three point latching mechanism with heavy duty roller ends is provided for ease of door closing.
- Oil resistant gaskets are permanently secured.
- The right-hand door on all enclosures is the master door.
- Master door handle complete with screw defeater and padlock hasp.
- Slave door handle complete with padlock hasp.
- A mechanical interlock activated by the master door prevents the auxiliary door from being opened first.
- The flange cutout provides mounting for disconnect operators (verify compatibility in advance).
- A provision for mounting fluorescent lighting is provided.
- A bonding stud is provided in the door and a grounding stud is provided in the enclosure for each door.
- A literature pocket is provided for the inside of the door.

Note:

- Disconnect switches, circuit breakers and operators are not provided with the enclosure, and must be ordered separately from the manufacturer.

Distributed by Gross Automation | +1 (262) 252-1600. | hammondsales@grossautomation.com

© Hammond Manufacturing

Type 4X Stainless Steel Multi-Door Freestanding Disconnect Enclosure *UHD SS Series*

Hinge Door with Handle (Flange w/ multi-vendor cutout)

Finish

- Door and enclosure are natural stainless steel with a smooth, brushed finish..
- Inner panel(s) is finished in white powder coating.

Accessories

- Flange Disconnect Operator Adaptor Kits...*See Page* ***302***
- Door Stop Kit...*See Page* ***304***
- Window Kits...*See Page* ***294***
- Climate Control...*See Page* ***234***
- Lighting...*See Page* ***298***
- General Accessories...*See Page* ***268***

	Enclosure			Inner Panel	
Part No.	H	W	D	H	W
1UHD722918N4SS	72.13	28.75	18.13	60.00	21.75
1UHD723518N4SS	72.13	34.75	18.13	60.00	27.75
1UHD724118N4SS	72.13	40.75	18.13	60.00	33.75
1UHD844118N4SS	84.13	40.75	18.13	72.00	33.75
1UHD844124N4SS	84.13	40.75	24.13	72.00	33.75
1UHD904118N4SS	90.13	40.75	18.13	78.00	33.75
1UHD904120N4SS	90.13	40.75	20.13	78.00	33.75
1UHD904124N4SS	90.13	40.75	24.13	78.00	33.75

	Enclosure			Inner Panel	
Part No.	H	W	D	H	W
2UHD725518N4SS	72.13	55.00	18.13	60.00	48.00
2UHD726718N4SS	72.13	67.00	18.13	60.00	60.00
2UHD727918N4SS	72.13	79.00	18.13	60.00	72.00
2UHD727924N4SS	72.13	79.00	24.13	60.00	72.00
2UHD847918N4SS	84.13	79.00	18.13	72.00	72.00
2UHD847924N4SS	84.13	79.00	24.13	72.00	72.00
2UHD907918N4SS	90.13	79.00	18.13	78.00	72.00
2UHD907920N4SS	90.13	79.00	20.13	78.00	72.00
2UHD907924N4SS	90.13	79.00	24.13	78.00	72.00

	Enclosure			Inner Panels		
Part No.	H	W	D	H	W1	W2
3UHD7210118N4SS	72.13	100.25	18.13	60.00	27.75	60.00
3UHD7211918N4SS	72.13	118.25	18.13	60.00	33.75	72.00
3UHD8411918N4SS	84.13	118.25	18.13	72.00	33.75	72.00
3UHD8411924N4SS	84.13	118.25	24.13	72.00	33.75	72.00
3UHD9011924N4SS	90.13	118.25	24.13	78.00	33.75	72.00

	Enclosure			Inner Panels		
Part No.	H	W	D	H	W1	W2
4UHD8415718N4SS	84.13	156.50	18.13	72.00	72.00	72.00
4UHD9015718N4SS	90.13	156.50	18.13	78.00	72.00	72.00

© Hammond Manufacturing

© Hammond Manufacturing

Modular Freestanding Enclosures

Type 12 Mild Steel Modular Freestanding Enclosure
HME Series
Hinge Door w/ Various Handle Options 128

Type 12 Mild Steel Two Door Modular Freestanding Enclosure
HME Series
Hinge Door w/ Various Handle Options 130

Type 12 Mild Steel Modular Freestanding Disconnect Enclosure
HME Series
Hinge Door w/ Various Handle Options (Flange w/ multi-vendor cutout)..... 132

Type 12 Modular Freestanding Disconnect Enclosures
HME Series
Two Door 134

HME Accessories 136

© Hammond Manufacturing

Type 12 Mild Steel Modular Freestanding Enclosure *HME Series*

Hinge Door w/ Various Handle Options

Inner Panel Included

Quick Link: hammfg.com/HME

Application

- The HME product line provides users with a rugged housing for industrial control and operator interface in industrial environments.
- Modular design permits joining of units together for large scale and mixed use applications.
- Frame's 25mm hole pattern provides extensive component and accessory mounting flexibility.
- A broad range of industry standard sizes are offered.

Standards

- UL 508A Type 12
- CSA Type 12
- Complies with
  - NEMA Type 12
  - IEC 60529 IP54

Configuration

- Frame
- Removable solid top panel
- Lifting eyebolts (4)
- Removable bottom panel w/gland plates
- Solid front door with door frame
- Removable rear cover panel
- Inner mounting panel

Construction

- Formed 14 gauge steel.
- Fully welded frame with 25mm hole pattern for superior mounting flexibility.
- Foam gasket on all openings provides a dust-tight seal.
- Reinforced eyebolts are provided for easy enclosure lifting.
- Frames can be joined together with an optional joining kit.
- Doors can be easily interchanged, removed and/or reversed.
- Door opening 135°.
- Optional formed 14 gauge steel side panels are sold separately (in pairs).
- Bonding and grounding studs are provided for all doors and panels.

Finish

- Phosphatized and finished in RAL 7035 light gray powder coating.
- Inner panel is unpainted galvanized 12 gauge steel.

Accessories

- Side Mounting Inner Panels...*See Page* ***142***
- Side Mounting Barrier Panels...*See Page* ***142***
- Additional Inner Panels...*See Page* ***141***
- Bridge Panel...*See Page* ***143***
- Grid System...*See Page* ***140***
- 19" Rails and Width Adaptor Kit...*See Page* ***145***
- HME Handles...*See Page* ***147***
- Frame Joining Kit...*See Page* ***137***
- Side Panels...*See Page* ***137***
- Plinth...*See Page* ***136***
- Climate Control...*See Page* ***234***
- Lighting...*See Page* ***298***
- Additional HME Accessories...*See Page* ***136***
- General Accessories...*See Page* ***268***

© Hammond Manufacturing

Type 12 Mild Steel Modular Freestanding Enclosure *HME Series*

Hinge Door w/ Various Handle Options

Part No.	Enclosure H	Enclosure W	Enclosure D	Inner Panel H	Inner Panel W
HME1465	1400	600	500	1296	499
HME1466	1400	600	600	1296	499
HME1468	1400	600	800	1296	499
HME1485	1400	800	500	1296	699
HME1486	1400	800	600	1296	699
HME1488	1400	800	800	1296	699
HME1665	1600	600	500	1496	499
HME1666	1600	600	600	1496	499
HME1668	1600	600	800	1496	499
HME1685	1600	800	500	1496	699
HME1686	1600	800	600	1496	699
HME1688	1600	800	800	1496	699
HME1864	1800	600	400	1696	499
HME1865	1800	600	500	1696	499
HME1866	1800	600	600	1696	499
HME1868	1800	600	800	1696	499
HME1884	1800	800	400	1696	699
HME1885	1800	800	500	1696	699
HME1886	1800	800	600	1696	699
HME1888	1800	800	800	1696	699
HME18104	1800	1000	400	1696	899
HME18105	1800	1000	500	1696	899
HME18106	1800	1000	600	1696	899
HME18108	1800	1000	800	1696	899

Note: Table dimensions in mm.

Part No.	Overall Dimensions H	Overall Dimensions W	Overall Dimensions D	Inner Panel H	Inner Panel W
HME2045	2000	400	500	1896	299
HME2064	2000	600	400	1896	499
HME2065	2000	600	500	1896	499
HME2066	2000	600	600	1896	499
HME2068	2000	600	800	1896	499
HME2084	2000	800	400	1896	699
HME2085	2000	800	500	1896	699
HME2086	2000	800	600	1896	699
HME2088	2000	800	800	1896	699
HME20105	2000	1000	500	1896	899
HME20106	2000	1000	600	1896	899
HME20108	2000	1000	800	1896	899
HME2246	2200	400	600	2096	299
HME2265	2200	600	500	2096	499
HME2266	2200	600	600	2096	499
HME2285	2200	800	500	2096	699
HME2286	2200	800	600	2096	699
HME2288	2200	800	800	2096	699
HME22105	2200	1000	500	2096	899
HME22106	2200	1000	600	2096	899

Note: Table dimensions in mm.

© Hammond Manufacturing

Type 12 Mild Steel Two Door Modular Freestanding Enclosure *HME Series*

Hinge Door w/ Various Handle Options

Quick Link: hammfg.com/HMET

Application

- The HMET 2 door product line provides users with a rugged housing for industrial control and operator interface in industrial environments.
- Modular design permits joining of units together for large scale and mixed use applications.
- Frame's 25mm hole pattern provides extensive component and accessory mounting flexibility.
- A broad range of industry standard sizes are offered.

Standards

- UL 508A Type 12
- CSA Type 12
- Complies with
  - NEMA Type 12
  - IEC 60529 IP54

Configuration

- Frame
- Removable solid top panel
- Lifting eyebolts (4)
- Removable bottom panel w/gland plates
- Two overlapping solid front doors with door frames
- Removable rear cover panels (1 or 2 depending on width) with welded rear center post on units 1000 mm and wider.
- Full width inner mounting panel

Construction

- Formed 14 gauge steel.
- Fully welded frame with 25mm hole pattern for superior mounting flexibility.
- Foam gasket on all openings provides a dust-tight seal.
- Reinforced eyebolts are provided for easy enclosure lifting.
- Frames can be joined together with an optional joining kit.
- Doors can be easily interchanged, removed and/or reversed.
- Door opening 135°.
- Optional formed 14 gauge steel side panels are sold separately (in pairs).
- Bonding and grounding studs are provided for all doors and panels.

Finish

- Phosphatized and finished in RAL 7035 light gray powder coating.
- Inner panel is unpainted galvanized 12 gauge steel.

Accessories

- Side Mounting Inner Panels...*See Page* ***142***
- Side Mounting Barrier Panels...*See Page* ***142***
- Additional Inner Panels...*See Page* ***141***
- Bridge Panel...*See Page* ***143***
- Grid System...*See Page* ***140***
- HME Handles...*See Page* ***147***
- Frame Joining Kit...*See Page* ***137***
- Side Panels...*See Page* ***137***
- Plinth...*See Page* ***136***
- Climate Control...*See Page* ***234***
- Lighting...*See Page* ***298***
- Additional HME Accessories...*See Page* ***136***
- General Accessories...*See Page* ***268***

Distributed by Gross Automation | +1 (262) 252-1600. | hammondsales@grossautomation.com

Technical references and CAD downloads available at www.hammondmfg.com

All dimensions in inches unless specified otherwise

Quality Products. Service Excellence.
© Hammond Manufacturing
Canada: 519.822.2960 or 905.456.3770 USA: 716.630.7030
Data Subject to change without notice

Type 12 Mild Steel Two Door Modular Freestanding Enclosure *HME Series*

Hinge Door w/ Various Handle Options

	Enclosure			Inner Panel	
Part No.	H	W	D	H	W
HMET14125	1400	1200	500	1296	1099
HMET14126	1400	1200	600	1296	1099
HMET14128	1400	1200	800	1296	1099
HMET16125	1600	1200	500	1496	1099
HMET16126	1600	1200	600	1496	1099
HMET16128	1600	1200	800	1496	1099
HMET1886	1800	800	600	1696	699
HMET1885	1800	800	500	1696	699
HMET18104	1800	1000	400	1696	899
HMET18124	1800	1200	400	1696	1099
HMET18125	1800	1200	500	1696	1099
HMET18126	1800	1200	600	1696	1099
HMET18128	1800	1200	800	1696	1099
HMET18164	1800	1600	400	1696	1499
HMET18165	1800	1600	500	1696	1499
HMET18166	1800	1600	600	1696	1499
HMET18168	1800	1600	800	1696	1499
HMET18184	1800	1800	400	1696	1699
HMET18185	1800	1800	500	1696	1699
HMET18186	1800	1800	600	1696	1699
HMET18188	1800	1800	800	1696	1699
HMET20105	2000	1000	500	1896	899
HMET20106	2000	1000	600	1896	899
HMET20124	2000	1200	400	1896	1099
HMET20125	2000	1200	500	1896	1099
HMET20126	2000	1200	600	1896	1099
HMET20128	2000	1200	800	1896	1099
HMET20165	2000	1600	500	1896	1499
HMET20166	2000	1600	600	1896	1499
HMET20168	2000	1600	800	1896	1499
HMET20185	2000	1800	500	1896	1699
HMET20186	2000	1800	600	1896	1699
HMET20188	2000	1800	800	1896	1699
HMET22106	2200	1000	600	2096	899
HMET22125	2200	1200	500	2096	1099
HMET22126	2200	1200	600	2096	1099

Note: Table dimensions in mm.

© Hammond Manufacturing

Type 12 Mild Steel Modular Freestanding Disconnect Enclosure *HME Series*

Hinge Door w/ Various Handle Options (Flange w/ multi-vendor cutout)

Inner Panel Included

Quick Link: hammfg.com/HFMD

Application

- Provides users with a rugged housing for flange mount disconnect and circuit breaker requirements.
- Modular design permits joining of units together for large scale and mixed use applications.
- Frame's 25mm hole pattern provides extensive component and accessory mounting flexibility.
- A broad range of industry standard sizes are offered.
- HME/HMET Series enclosures can be used as slave units to HFMD/HFMDT Disconnect Series.
- The flange mount disconnect units accommodate today's most popular disconnect hardware.
- ABB Controls: Disconnect Switches up to (and including) 200 amp, also operators for ABB circuit breakers up to 800 amp.
- Allen Bradley: 1494V variable depth flange mounted disconnect up to and including 200 amp and operators for C-H Westinghouse circuit breakers up to 400 amp.
- C-H Westinghouse: C361 flange mounted disconnect switches up to and including 200 amp and C371 circuit breakers up to 600 amp, also Flex Shaft handle mechanisms for circuit breakers.
- General Electric: Type STDA flange mounted variable depth flange operators for disconnect switches up to and including 200 amp and circuit breakers up to 600 amp or Spectra Flex™ cable operators for circuit breakers.
- ITE Siemens Max-Flex: flange mounted variable depth cable operators for disconnect switches up to 200 amp and circuit breakers up to 600 amp.
- Square D: class 9422 variable depth flange mounted operating mechanisms for disconnect switches up to and including 200 amp or cable mechanism for 30, 60 or 100 amp, also circuit breakers with variable depth operators or cable mechanism up to 400 amp.

Standards

- UL 508A Type 12
- CSA Type 12
- Complies with
  - NEMA Type 12
  - IEC 60529 IP54
- Appropriate components are required to maintain these standards.

Standard Configuration

- Frame
- Removable solid top panel
- Lifting eyebolts (4)
- Removable bottom panel w/gland plates
- Solid front door(s) with door frame(s).
- Removable rear cover panel(s) – two door version with removable center post
- Inner mounting panel
- Disconnect to door handle activation hardware
- Hinged flange door

Construction

- Formed 14 gauge steel.
- Fully welded frame with 25mm hole pattern for superior mounting flexibility.
- Foam gasket on all openings provides a dust-tight seal.
- Reinforced eyebolts are provided for easy enclosure lifting.
- Frames can be joined together with an optional joining kit.
- Doors can be easily interchanged, removed and/or reversed.
- Door opening 135°.
- Optional formed 14 gauge steel side panels are sold separately (in pairs).
- Bonding and grounding studs are provided for all doors and panels.

Finish

- Phosphatized and finished in RAL 7035 light gray powder coating.
- Inner panel is unpainted galvanized 12 gauge steel.

Distributed by Gross Automation | +1 (262) 252-1600. | hammondsales@grossautomation.com

Technical references and CAD downloads available at www.hammondmfg.com

All dimensions in inches unless specified otherwise

Quality Products. Service Excellence.

© Hammond Manufacturing

Canada: 519.822.2960 or 905.456.3770 USA: 716.630.7030

Data Subject to change without notice

Type 12 Mild Steel Modular Freestanding Disconnect Enclosure *HME Series*

Hinge Door w/ Various Handle Options (Flange w/ multi-vendor cutout)

Accessories

- Interlock Kit...*See Page* **144**
- Side Mounting Barrier Panels...*See Page* **142**
- Side Mounting Inner Panels...*See Page* **142**
- Grid System...*See Page* **140**
- Side Panels...*See Page* **137**
- Frame Joining Kit...*See Page* **137**
- Plinth...*See Page* **136**
- HME Handles...*See Page* **147**
- Climate Control...*See Page* **234**
- Lighting...*See Page* **298**
- Additional HME Accessories...*See Page* **136**
- General Accessories...*See Page* **268**

	Enclosure			Inner Panel	
Part No.	H	W	D	H	W
HFMD1485	1400	800	500	1296	699
HFMD14105	1400	1000	500	1296	899
HFMD1685	1600	800	500	1496	699
HFMD1686	1600	800	600	1496	699
HFMD1884	1800	800	400	1696	699
HFMD1885	1800	800	500	1696	699
HFMD18105	1800	1000	500	1696	899
HFMD2085	2000	800	500	1896	699
HFMD2086	2000	800	600	1896	699
HFMD2088	2000	800	800	1896	699
HFMD20105	2000	1000	500	1896	899
HFMD20106	2000	1000	600	1896	899
HFMD2286	2200	800	600	2096	699
HFMD22105	2200	1000	500	2096	899

Note: Table dimensions in mm.

Distributed by Gross Automation | +1 (262) 252-1600. | hammondsales@grossautomation.com

Type 12 Modular Freestanding Disconnect Enclosures *HME Series*

Two Door

Quick Link: hammfg.com/HFMDT

Application

- Provides users with a rugged housing for flange mount disconnect and circuit breaker requirements.
- Modular design permits joining of units together for large scale and mixed use applications.
- Frame's 25mm hole pattern provides extensive component and accessory mounting flexibility.
- A broad range of industry standard sizes are offered.
- HME/HMET Series enclosures can be used as slave units to HFMD/HFMDT Disconnect Series.
- The flange mount disconnect units accommodate today's most popular disconnect hardware.
- ABB Controls: Disconnect Switches up to (and including) 200 amp, also operators for ABB circuit breakers up to 800 amp.
- Allen Bradley: 1494V variable depth flange mounted disconnect up to and including 200 amp and operators for C-H Westinghouse circuit breakers up to 400 amp.
- C-H Westinghouse: C361 flange mounted disconnect switches up to and including 200 amp and C371 circuit breakers up to 600 amp, also Flex Shaft handle mechanisms for circuit breakers.
- General Electric: Type STDA flange mounted variable depth flange operators for disconnect switches up to and including 200 amp and circuit breakers up to 600 amp or Spectra Flex™ cable operators for circuit breakers.
- ITE Siemens Max-Flex: flange mounted variable depth cable operators for disconnect switches up to 200 amp and circuit breakers up to 600 amp.
- Square D: class 9422 variable depth flange mounted operating mechanisms for disconnect switches up to and including 200 amp or cable mechanism for 30, 60 or 100 amp, also circuit breakers with variable depth operators or cable mechanism up to 400 amp.

Standards

- UL 508A Type 12
- CSA Type 12
- Complies with
  - NEMA Type 12
  - IEC 60529 IP54
- Appropriate components are required to maintain these standards.

Standard Configuration

- Frame
- Removable solid top panel
- Lifting eyebolts (4)
- Removable bottom panel w/gland plates
- Solid front door(s) with door frame(s).
- Removable rear cover panel(s) – two door version with removable center post
- Inner mounting panel
- Disconnect to door handle activation hardware
- Hinged flange door

Construction

- Formed 14 gauge steel.
- Fully welded frame with 25mm hole pattern for superior mounting flexibility.
- Foam gasket on all openings provides a dust-tight seal.
- Reinforced eyebolts are provided for easy enclosure lifting.
- Frames can be joined together with an optional joining kit.
- Doors can be easily interchanged, removed and/or reversed.
- Door opening 135°.
- Optional formed 14 gauge steel side panels are sold separately (in pairs).
- Bonding and grounding studs are provided for all doors and panels.

Distributed by Gross Automation | +1 (262) 252-1600. | hammondsales@grossautomation.com

© Hammond Manufacturing

Type 12 Modular Freestanding Disconnect Enclosures *HME Series*

Two Door

Finish

- Phosphatized and finished in RAL 7035 light gray powder coating.
- Inner panel is unpainted galvanized 12 gauge steel.

Accessories

- Interlock Kit...*See Page* ***144***
- Side Mounting Inner Panels...*See Page* ***142***
- Side Mounting Barrier Panels...*See Page* ***142***
- Bridge Panel...*See Page* ***143***
- Grid System...*See Page* ***140***
- Frame Joining Kit...*See Page* ***137***
- Side Panels...*See Page* ***137***
- Plinth...*See Page* ***136***
- HME Handles...*See Page* ***147***
- Climate Control...*See Page* ***234***
- Lighting...*See Page* ***298***
- Additional HME Accessories...*See Page* ***136***
- General Accessories...*See Page* ***268***

	Enclosure			Inner Panel	
Part No.	H	W	D	H	W
HFMDT18164	1800	1600	400	1696	1499
HFMDT18165	1800	1600	500	1696	1499
HFMDT18184	1800	1800	400	1696	1699
HFMDT18185	1800	1800	500	1696	1699
HFMDT18186	1800	1800	600	1696	1699
HFMDT20165	2000	1600	500	1896	1499
HFMDT20166	2000	1600	600	1996	1499
HFMDT20168	2000	1600	800	1896	1499
HFMDT20185	2000	1800	500	1896	1699

Note: Table dimensions in mm.

© Hammond Manufacturing

Plinth

- Plinths install under enclosure for additional cable entry space and/or access.
- Adds 4" (100mm) or 8" (200mm) to overall enclosure height.
- HPLW contains 4 corner supports along with corresponding front and rear panels.
- HPLD plinth side panels ordered separately to close ends.
- HPB solid plinth includes 2 gland plates.
- All panels are easily removable for quick access.
- Compatible with leveling feet.
- Comes complete with all mounting hardware.
- Finished in black.

Corners & Front/Back Panels

Part Number	Height	Use w/ HME Width
HPLW14	100	400
HPLW16	100	600
HPLW18	100	800
HPLW110	100	1000
HPLW112	100	1200
HPLW116	100	1600
HPLW118	100	1800
HPLW24	200	400
HPLW26	200	600
HPLW28	200	800
HPLW210	200	1000
HPLW212	200	1200
HPLW216	200	1600
HPLW218	200	1800

Note: Table dimensions in mm.

Side Panels (pair)

Part Number	Height	Use w/ HME Depth
HPLD14	100	400
HPLD15	100	500
HPLD16	100	600
HPLD18	100	800
HPLD24	200	400
HPLD25	200	500
HPLD26	200	600
HPLD28	200	800

Note: Table dimensions in mm.

Solid Base

Part Number	Height (mm)	Use w/ HME Width (mm)	Use w/ HME Depth (mm)
HPB165	100	600	500
HPB185	100	800	500
HPB1105	100	1000	500
HPB1125	100	1200	500
HPB1165	100	1600	500

Note: Table dimensions in mm.

Leveling Feet

- Maintains UL/CSA Type 12 approvals.
- Screws fasten into frame. Optional tamper resistant screws available
- Bond studs provided for grounding.
- Finished in RAL 7035 light gray.
- Sold in quantities of four.

Part No.	HLF4

© Hammond Manufacturing

Side Panels

- Maintains UL/CSA Type 12 approvals.
- Screws fasten into frame. Optional tamper resistant screws available
- Bond studs provided for grounding.
- Finished in RAL 7035 light gray.
- Sold in quantities of two.

Part Number	For Use with HME Height	Depth
HSP145	1400	500
HSP146	1400	600
HSP148	1400	800
HSP165	1600	500
HSP166	1600	600
HSP168	1600	800
HSP184	1800	400
HSP185	1800	500
HSP186	1800	600
HSP188	1800	800
HSP204	2000	400
HSP205	2000	500
HSP206	2000	600
HSP208	2000	800
HSP225	2200	500
HSP226	2200	600
HSP228	2200	800

Note: Table dimensions in mm.

Tamper Resistant Screws

- Replacement screws for side and rear panels.
- Provide added safety and security.
- Package consists of 8 security hex screws and 1 security hex key.
- Please see the chart below to determine how many kits to order.

Part No.	ISPTPKIT

Component	# Screws Req'd	# Kits to Order
Side Panels (Pair)	16	2
Rear Panel (600, 700, 800, 1000 mm)	8	1
Rear Panel (1200, 1600 mm)	16	2

Frame Joining Kit

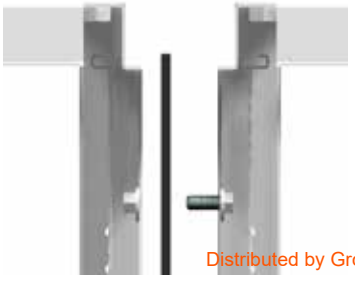

- Heavy duty bolting kit connects side by side units at 8 points.
- Maintains UL/CSA Type 12 approvals.

Part No.	HMEJK

Distributed by Gross Automation | +1 (262) 252-1600. | hammondsales@grossautomation.com

Technical references and CAD downloads available at www.hammondmfg.com

All dimensions in inches unless specified otherwise

© Hammond Manufacturing

Window Door

- For use with HME Single Door Series only
- Provides maximum viewing area of enclosure equipment
- Maintains NEMA/UL/CSA Type 12 rating
- UL - 94-VO clear polycarbonate window
- Removable and reversible for left or right hand opening
- Complete with double bit insert latching mechanisim
- Door opening 135°
- Note: check compatibility with HFMD and HFMDT

	Viewing Area			For use with Cabinet	
Part No.	H	W	E	H	W
HMEDW146	1219	434	67	1400	600
HMEDW148	1219	635	67	1400	800
HMEDW166	1419	434	67	1600	600
HMEDW168	1419	635	67	1600	800
HMEDW186	1617	434	67	1800	600
HMEDW188	1617	635	67	1800	800
HMEDW206	1819	434	67	2000	600
HMEDW208	1819	635	67	2000	800
HMEDW226	1819	434	266	2200	600
HMEDW228	1819	635	266	2200	800

Note: Table dimensions in mm.

Top Mount Cable Module and Side Panels

- Provides a space for cable organization along top of HME cabinet(s).
- Mounts directly to top of HME cabinet (with top panel removed) with matching WxD dimensions.
- Top Module consists of frame (similar to HME overall frame) with removable front and rear panels.
- Side panels (pair) sold separately. (Note: Standard top panel from HME cabinet fits on matching WxD version of Top Module).
- Finished in RAL7035 light gray.

Part Number	Description	H	W	D
HTCM46	Top Cable Module	200	400	600
HTCM66	Top Cable Module	200	600	600
HTCM86	Top Cable Module	200	800	600
HTCM106	Top Cable Module	200	1000	600
HTCM126	Top Cable Module	200	1200	600
HTCM346	Top Cable Module	300	400	600
HTCM366	Top Cable Module	300	600	600
HTCM386	Top Cable Module	300	800	600
HTCM3106	Top Cable Module	300	1000	600
HTCM3126	Top Cable Module	300	1200	600
HTCMS6	Side Panels for 200mm Top Cabling Module	200	-	600
HTCMS36	Side Panels for 300mm Top Cable Module	300	-	600

Note: Table dimensions in mm.

© Hammond Manufacturing

HME Casters

- Heavy duty casters set of 4 consisting of 2 locking and 2 non locking
- Features ball bearing swivel and hard composition wheels.
- Mfg rating of 1000 lbs set of 4
- Wheels are 4” diameter
- Threads into base

Part No.	1425HME

Lifting Angles

- Used to replace lifting eyes for ganged enclosures
- Overall height 3.1” with eyelet hole 1.375”
- Kit includes 2 plated angles and hardware
- Weight capacity 2000 lbs per pair

Part No.	HMELA2

Grid Strap Spacer

- Constructed of 14 gauge steel galvanized
- Designed as a spacer for 75mm grid straps when mounted front to back on bottom flanges
- Can be used for terminal straps and grounding bars
- Sold in pairs

Part No.	HGS3

© Hammond Manufacturing

Grid System

- Constructed of 14 gauge steel, galvanized.
- There are 4 styles: (1) 25mm wide Depth Grid Strap, (2) 75mm wide Depth Grid Strap, (3) 75mm wide Vertical Grid Strap and (4) 25mm wide Door Support Rail
- Grid Straps feature pattern of alternating square holes (for cage nut) and round holes (for M5 or #12 screw) at standard 25mm centers.
- Door Support Rails have round holes only.
- Depth Grid Straps and Door Support Rails have mounting flanges at either end.
- Vertical Grid Straps mount flush (butt end bracket included) to other straps for a smooth continuous mounting surface. (To achieve full height vertical strap, 2 x 75mm Depth Grid Straps required for top and bottom).
- Sold in pairs.

Grid Mounting Hardware

- A variety of hardware options are available for the Grid System.
- Square holes accommodate cage nuts listed.
- Round holes accommodate M5 and #12 thread forming screws listed.

Depth Grid Straps

Part Number	Description	Length	Fits Full Depth HME
HGD14	25mm wide with mounting flange	222	400
HGD15	25mm wide with mounting flange	323	500
HGD16	25mm wide with mounting flange	423	600
HGD18	25mm wide with mounting flange	623	800
HGD34	75mm wide with mounting flange	223	400
HGD35	75mm wide with mounting flange	323	500
HGD36	75mm wide with mounting flange	423	600
HGD38	75mm wide with mounting flange	623	800

Note: Table dimensions in mm.

Square hole Hardware

Part Number	Description
RCNIT	Cage nut insertion tool
CAGKIT1032-25	25 of 10-32 screws and cage nuts
CAGKIT1032-100	100 of 10-32 screws and cage nuts
1421D	25 of Panhead #10-32 Slot/Phillips x 0.5”
1421CND25	25 of ¼-20 cage nut
1421CND100	100 of ¼-20 cage nut
1421SP142025	25 of Panhead ¼-20 Slot/Phillips x 0.5”
1421CNB25	25 of M6 cage nut
1421CNB100	100 of M6 cage nut
1421CNBF100	100 of M6 front load cage nut
1421HPM625	25 of Hex/Phillips M6 screws x 12mm

Vertical Grid Straps

Part Number	Description	Length	Fits Full Height HME
HGV35	75mm wide with flush mount bracket	350	n/a
HGV55	75mm wide with flush mount bracket	550	n/a
HGV75	75mm wide with flush mount bracket	750	n/a
HGV95	75mm wide with flush mount bracket	950	n/a
HGV115	75mm wide with flush mount bracket	1150	1400*
HGV135	75mm wide with flush mount bracket	1350	1600*
HGV155	75mm wide with flush mount bracket	1550	1800*
HGV175	75mm wide with flush mount bracket	1750	2000*
HGV195	75mm wide with flush mount bracket	1950	2200*

* Requires 75mm wide Depth Grid Straps mounted in cabinet above and below
Note: Table dimensions in mm.

Door Support Rails

Part Number	Description	Length	Fits HME Door Width
HGDSR4	25mm wide with mounting flange	248	400
HGDSR5	25mm wide with mounting flange	348	500
HGDSR6	25mm wide with mounting flange	448	600
HGDSR8	25mm wide with mounting flange	648	800
HGDSR9	25mm wide with mounting flange	748	900*
HGDSR10	25mm wide with mounting flange	848	1000

* 900mm width refers to doors on 1800mm wide cabinet
Note: Table dimensions in mm.

© Hammond Manufacturing

Inner Panels and Supports

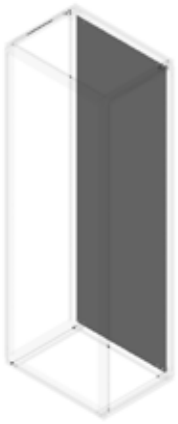

Base Inner Panel

- Formed 12 gauge galvanized steel unpainted
- Included with standard configuration
- Sold separately as secondary or replacement panel
- Can be used as swing panel (where indicated * - sold separately)
- Inner panel attachment hardware sold separately as required

Inner Panel Side Support

- Use to provide extra support for larger loads
- Attached to either frame support in rear position or optional grid straps
- Sold in qty pkg of 6, complete with 24 - #12 pan head screws

Inner Panel Rear Support

- Rear support to prevent flexing of inner panel when heavily loaded
- Material: Mild steel channel
- Finish: RAL7035 Light Grey
- Sold in qty pfg of 2 complete with mounting hardware

	Overall		For use with Cabinet		Inner Panel
Part No.	Height	Width	Height	Width	Rear Support
HMEP146*	1296	499	1400	600	-
HMEP148*	1296	699	1400	800	HMEPRS800
HMEP1410	1296	899	1400	1000	HMEPRS1000
HMEP1412	1296	1099	1400	1200	HMEPRS1200
HMEP166*	1296	499	1600	600	-
HMEP168*	1496	699	1600	800	HMEPRS800
HMEP1612	1496	1099	1600	1200	HMEPRS1200
HMEP186*	1496	499	1800	600	-
HMEP188*	1696	699	1800	800	HMEPRS800
HMEP1810	1696	899	1800	1000	HMEPRS1000
HMEP1812	1696	1099	1800	1200	HMEPRS1200
HMEP1816	1696	1499	1800	1600	HMEPRS1600
HMEP1818	1660	1699	1800	1800	HMEPRS1800
HMEP204	1660	299	2000	400	-
HMEP206*	1896	499	2000	600	-
HMEP208*	1896	699	2000	800	HMEPRS800
HMEP2010	1896	899	2000	1000	HMEPRS1000
HMEP2012	1896	1099	2000	1200	HMEPRS1200
HMEP2016	1896	1499	2000	1600	HMEPRS1600
HMEP2018	1896	1699	2000	1800	HMEPRS1800
HMEP224	1896	299	2200	400	-
HMEP226*	1896	499	2200	600	-
HMEP228*	2096	699	2200	800	HMEPRS800
HMEP2210	2096	899	2200	1000	HMEPRS1000
HMEP2212	2096	1099	2200	1200	HMEPRS1200

* Can be used as swing panel (Sold Separately)
Note: Table dimensions in mm.

Additional Hardware

Part No.	HMEIPMTG

Inner Panel Side Support

Part No.	HIPSPK

© Hammond Manufacturing

Side Mounting Inner Panels

- Sold individually
- Formed 14 gauge galvanized steel unpainted
- Mounts directly to frame
- Can be used in combination with depth grid straps (top and bottom)
- Allows installation of 19" mounting rails including center support
- Reduced height may allow cable pass through on ganged cabinets

	Overall		For use with Cabinet	
Part No.	H	W	H	D
HSIP145	1143	375	1400	500
HSIP146	1143	475	1400	600
HSIP148	1143	675	1400	800
HSIP165	1343	375	1600	500
HSIP166	1343	475	1600	600
HSIP168	1343	675	1600	800
HSIP184	1543	275	1800	400
HSIP185	1543	375	1800	500
HSIP186	1543	475	1800	600
HSIP188	1573	675	1800	800
HSIP204	1743	275	2000	400
HSIP205	1743	375	2000	500
HSIP206	1743	475	2000	600
HSIP208	1743	675	2000	800
HSIP225	1943	375	2200	500
HSIP226	1943	475	2200	600
HSIP228	1943	675	2200	800

Note: Table dimensions in mm.

Side Mounting Barrier Panels

- Sold individually
- Formed 14 gauge galvanized steel unpainted
- Mounts directly to frame
- Full height and depth panel creating a full barrier between cells
- No provision for depth grid straps or 19" mounting rails
- Can be used as a mounting surface

	Overall		For use with Cabinet	
Part No.	Height	Width	Height	Depth
HSBP145	1293	375	1400	500
HSBP146	1293	475	1400	600
HSBP148	1293	675	1400	800
HSBP165	1493	375	1600	500
HSBP166	1493	475	1600	600
HSBP168	1493	675	1600	800
HSBP184	1693	275	1800	400
HSBP185	1693	375	1800	500
HSBP186	1693	475	1800	600
HSBP188	1693	675	1800	800
HSBP204	1893	275	2000	400
HSBP205	1893	375	2000	500
HSBP206	1893	475	2000	600
HSBP208	1893	675	2000	800
HSBP225	2093	375	2200	500
HSBP226	2093	475	2200	600
HSBP228	2093	675	2200	800

Note: Table dimensions in mm.

Distributed by Gross Automation | 1 (866) 502-7600. | hammondsales@grossautomation.com

Technical references and CAD downloads available at www.hammondmfg.com

All dimensions in inches unless specified otherwise

© Hammond Manufacturing

Data Subject to change without notice

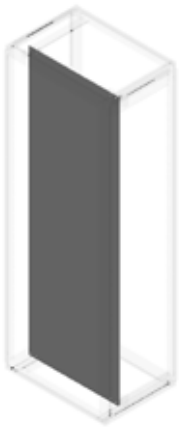

Swing Panel

- Formed 12 gauge galvanized steel unpainted
- Requires Swing Kit sold separately

Accessories

- Swing Kits...*See Page* ***144***

Part No.	Overall Height	Overall Width	For use with Cabinet Height	For use with Cabinet Width
HMEP146	1296	499	1400	600
HMEP148	1296	699	1400	800
HMEP166	1496	499	1600	600
HMEP168	1496	699	1600	800
HMEP186	1696	499	1800	600
HMEP188	1696	699	1800	800
HMEP206	1896	499	2000	600
HMEP208	1896	699	2000	800
HMEP226	2096	499	2200	600
HMEP228	2096	699	2200	800

Note: Table dimensions in mm.

Shelf

- Mounts to internal door channel using 1 or 2 door support rails (sold separately) or directly to a door/side panel using supplied hardware. Can be easily positioned at various heights.
- Opens to 90° or 75° angle and quickly folds down for compact storage.
- 16” wide x 15” deep
- Finished in RAL 7035 light gray.

Part No.	DMS1615

Bridge Panel

- Mounts between inner panels of joined enclosures.
- Formed 12 gauge galvanized steel unpainted.
- 3.75” wide.

Part Number	For Use with Cabinet Height
HMEPB14	1400
HMEPB16	1600
HMEPB18	1800
HMEPB20	2000
HMEPB22	2200

Note: Table dimensions in mm.

Distributed by Gross Automation | +1 (262) 252-1600. | hammondsales@grossautomation.com

Technical references and CAD downloads available at www.hammondmfg.com

All dimensions in inches unless specified otherwise

© Hammond Manufacturing

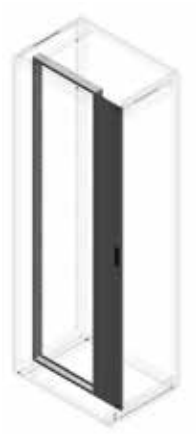

Swing Frame for 19” Mounting

For use with HME Series

- Frame provides 19” rack mounting centers
- Rails punched for square holed cage nuts
- Finished in RAL7035
- Requires Swing Kit sold separately

Accessories

- Swing Kits...*See Page* ***144***

	Overall Dimensions			Rack	For use with Cabinet	
Part No.	**Height**	**Width**	**Depth**	**Units**	**Height**	**Width**
HMESWF166	1494	500	57	32U	1600	600
HMESWF168	1494	704	57	32U	1600	800
HMESWF186	1694	500	57	37U	1800	600
HMESWF188	1694	704	57	37U	1800	800
HMESWF206	1894	500	57	41U	2000	600
HMESWF208	1894	704	57	41U	2000	800
HMESWF226	2094	500	57	45U	2200	600
HMESWF228	2094	704	57	45U	2200	800

Note: Table dimensions in mm.

Swing Kits

- Used in conjunction with HMEP Swing Panels or HMESWF Swing Frames
- Provides adjustable location for panels and frame front to rear
- Comes complete with all mounting hardware
- Allows for maximum swing of 120° when positioned fully at front of cabinet.
- Finished in RAL7035

Part Number	Description
HMESWK4	Fits 400mm depth frame
HMESWK5	Fits 500mm depth frame
HMESWK6	Fits 600mm depth frame
HMESWK8	Fits 800mm depth frame

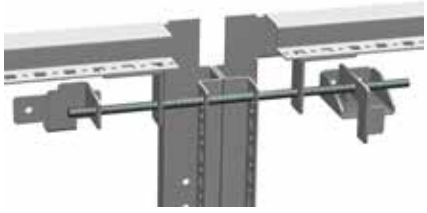

Interlock Kit

- Master Interlock Kit- required for master door in system
- Slave Interlock Kit- required for each slave door to be interlocked with master door
- Rod connector kit- required for connecting to slave kit
- Clear zinc plated
- All kits maintain UL/CSA Type 12 approvals

Part Number	Description
HMIK	Master Interlock Kit
HSIK	Slave Interlock Kit
HSCRD	Rod Connector kit 600-1200 wide

Ordering Guide Common assemblies	Required
Single Door (Master Right or left) to Single door Cabinet	Master Interlock Kit
Single Door (Master right) to Double door Cabinet	Master Interlock Kit
Single Door (Master left) to Double door cabinet	Master Interlock Kit + Rod Connector Kit
Double Door (Master Right or Left) to Double door Cabinet	Master Interlock Kit + Rod Connector Kit
Any Additional cabinets to any of the above configurations	Slave + Rod Connector kit

Distributed by Gross Automation | 1 (202) 252-1890 | hammondsales@grossautomation.com

Technical references and CAD downloads available at www.hammondmfg.com

All dimensions in inches unless specified otherwise

© Hammond Manufacturing

19" Rails and Width Adaptor Kit

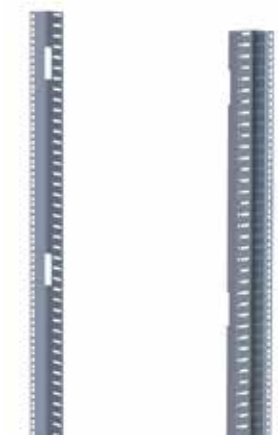

- Provides 19" rack mounting centers in 600mm wide cabinets.
- Provides 19" rack mounting centers in 800mm wide cabinets when combined with Width Adapter Kits (Part # HAK19800).
- Can mount directly to frame in full front and full back positions or can have full front to back depth adjustment when used with Depth Grid Straps (sold separately).
- Rails are 12 gauge, include mounting hardware and are clear zinc plated (ZPL) finish.
- Square holed rails with full EIA centers.
- Sold in pairs.

		Mounting Space		
Part Number	Style	U	Inches	Use with H
HPR16SZPL	Panel (L shape)	33	57.75	1600
HPR18SZPL	Panel (L shape)	38	66.5	1800
HPR20SZPL	Panel (L shape)	42	73.5	2000
HPR22SZPL	Panel (L shape)	47	82.25	2200
HCR16SZPL	Combination	33	57.75	1600
HCR18SZPL	Combination	38	66.5	1800
HCR20SZPL	Combination	42	73.5	2000
HCR22SZPL	Combination	47	82.25	2200

Note: Table dimensions in mm.

Part Number	Description
HAK19800	Adapts 800mm wide cabinets to 19" rack mounting (includes 4 brackets)

Inserts

- Standard door hardware is an escutcheon plate with double bit insert.
- A variety of other inserts (and matching keys) available as alternatives.

Part No.	Type	Description
HMESQI7	Insert	For escutcheon - 7mm square
HMESQI8	Insert	For escutcheon - 8mm square
HMETRI6	Insert	For escutcheon - 6.5mm triangle
HMETRI7	Insert	For escutcheon - 7mm triangle
HMETRI8	Insert	For escutcheon - 8mm triangle
HMEDBPI	Insert	For escutcheon - double bit w/3mm pin
HMESLCPI	Insert	For escutcheon - slot - coin proof
HMENLINS	Insert	For HMEHLKL non-locking insert
2SQK7	Key	For escutcheon - 7mm square
HMESQK8	Key	For escutcheon - 8mm square
HMETRK6	Key	For escutcheon - 6.5mm triangle
2TRK7	Key	For escutcheon - 7mm triangle
HMETRK8	Key	For escutcheon - 8mm triangle
HMEDBPK	Key	For escutcheon - double bit w/3mm pin
PMKEY	Key	For escutcheon - standard double bit

© Hammond Manufacturing

Copper Busbar

Details

- The GRDBAR Series comes in vertical, horizontal mounting as well as horizontal rack mounting.
- The grounding bar is made from heavy-gauge copper that attaches to the inside of an enclosure, cabinet or open frame rack to provide consolidated equipment grounds.
- Ground points have been drilled and tapped to accommodate a #10-32 screw (included).
- Use with our Ground Wire Kits to bond your equipment to the busbar.

HME Busbar Specifications:

- Constructed of Solid 0.125" Copper with 10-32 drilled and tapped holes and
- 1-0.312 main ground point.
- Mounts directly to grid straps or frame mounting surface.
- Busbar kit includes (quantities depend on product)
  - 1x Copper Busbar
  - 10-32 x 0.5 Screws
  - Flat Washers

Rack Mount Busbar Specifications:

- Available in both 19 and 23 inch rack mounting widths.
- Constructed of Solid 0.188" Copper Bar
- Includes ten (10) 10-32 drilled and tapped holes spaced at one (1) inch.
- Includes two (2) Ø 0.31 ground lug holes.
- Mounts directly to EIA mounting rails.
- Busbar kit includes:
  - 1x Copper Busbar
  - 10x 10-32 x 0.375" Screws
  - 2x 10-32 x 0.625" Screws
  - 2x 12-24 x 0.625" Screws
  - 2x 0.25" Flat Washers
  - 12x #10 Flat Washers
  - 1x Instruction bulletin

Horizontal HME Copper Busbar

Part Number	Length	For Use With Enclosure Width	Number of Ground Points	Series Compatibility
GRDBAR600	400	600	Qty 9 - 10-32	HME
GRDBAR800	600	800	Qty 18 - 10-32	HME

Note: Table dimensions in mm.

Vertical HME Copper Busbar

Part Number	Height	For Enclosure Height	Number of Ground Points	Series Compatibility
GRDBARV14	1270	1400	Qty 8 - 10-32	HME
GRDBARV16	1473	1600	Qty 10 - 10-32	HME
GRDBARV18	1676	1800	Qty 12 - 10-32	HME
GRDBARV20	1880	2000	Qty 12 - 10-32	HME
GRDBARV22	2083	2200	Qty 14 - 10-32	HME

Note: Table dimensions in mm.

Horizontal Rack Mount Copper Busbar

	Overall Dimensions			Mounting Dimensions		Number of	Ground
Part No.	Height	Width	Depth	Height	Width	Ground Points	Lug Holes
GRDBAR19	0.75	19.00	0.19	0.75	19.00	Qty 10 - 10-32	Qty 2 Ø 0.31
GRDBAR23	0.75	23.00	0.19	0.75	23.00	Qty 10 - 10-32	Qty 2 Ø 0.31

© Hammond Manufacturing

HME Handles

- Standard escutcheon plate and insert can be replaced with several handle options.
- Die cast Swing Handles (black) open door with a rotating motion, are key-locking and available with padlocking feature.
- Heavy duty die cast Lift Handles (light gray) open door with an ergonomic lift up motion and are offered in key-locking and non-locking versions.

Part Number	Description
HMEHSKL	Diecast swing handle with key locking (black)
HMEHSKLPL	Diecast swing handle with key locking and padlockable (black)
HMEHLKL	Diecast lift handle with key locking (RAL7035 Gray)
HMEHLNL	Diecast lift handle non-locking (RAL7035 Gray)

Light Kit Brackets

- Designed for mounting to HME frame assembly
- Brackets accept either Fluorescent or LED light kits
- 1.5” x 9”
- Sold in pairs
- Clear coat plated finish

Part No.	FLMTGBRK

Distributed by Gross Automation | +1 (262) 252-1600. | hammondsales@grossautomation.com

Technical references and CAD downloads available at www.hammondmfg.com

All dimensions in inches unless specified otherwise

© Hammond Manufacturing

Canada: 519.822.2960 or 905.456.3770 USA: 716.630.7030

Data Subject to change without notice

Operator Interface Enclosures

Type 4, 4X Mild Steel and Stainless Steel Base Units
Series 2000
Modular Console System 150

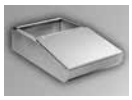
Type 4, 4X Mild Steel and Stainless Steel Desk Units
Series 2000
Modular Console System 151

Type 4, 4X Mild Steel and Stainless Steel Turret Units
Series 2000
Modular Console System 152

Type 4, 4X Mild Steel and Stainless Steel Consolet
Series 2000
Modular Console System 153

Type 4, 4X Mild Steel and Stainless Steel Terminal
Series 2000
Modular Console System 154

S2000 Accessories..... 155

Type 12 Consolets
1488 Series
Hinged Cover..... 162

Type 12 Console Cabinet
1471 Series
Sloped Front, Continuous Hinged Cover 163

Type 12 Modular Console Cabinet
1472 Series
Sloped Front 164

Eclipse Command System - NEMA 12
ECP Series
Command Enclosure 165

Tara Plus Suspension System
TPSS Series
NEMA 12, 13 166

Heavy Duty 50/80 mm Suspension Systems
HDSS Series
NEMA 12, 13 169

Type 12 Mild Steel Miniature Pushbutton Enclosures
MPB Series..... 172

Type 12 Mild Steel Pushbutton Enclosures
1435 Series 173

Type 4, 4X Stainless Steel Pushbutton Enclosures
1435SS Series..... 174

Type 12 Mild Steel Pushbutton Enclosures
1437 Series
Extra Deep..... 175

Type 4, 4X Stainless Steel Pushbutton Enclosures
1437SS Series
Extra Deep..... 176

Type 12 Mild Steel Pushbutton Enclosures
1489 Series
Hinged Cover..... 177

Type 12 Mild Steel Pushbutton Enclosures
1490 Series
Sloped Consolet 178

Type 4, 4X Polycarbonate Pushbutton Enclosure
1554 PB Series..... 179

Type 4, 4X Polyester Pushbutton Enclosure
PJPB Series 180

Type 4, 4X Polyester Pushbutton Enclosure
PJPBLC Series..... 181

Distributed by Gross Automation | +1 (262) 252-1600. | hammondsales@grossautomation.com

Technical references and CAD downloads available at www.hammondmfg.com

All dimensions in inches unless specified otherwise

Quality Products. Service Excellence.
© Hammond Manufacturing
Canada: 519.822.2960 or 905.456.3770 USA: 716.630.7030
Data Subject to change without notice

Configurations

Series 2000 Modular Console System

The Series 2000 Modular Console System offers designers numerous assembly and configuration choices. This system allows units to be “stacked” in multiple combinations to provide equipment support and display functions exactly where you want them.

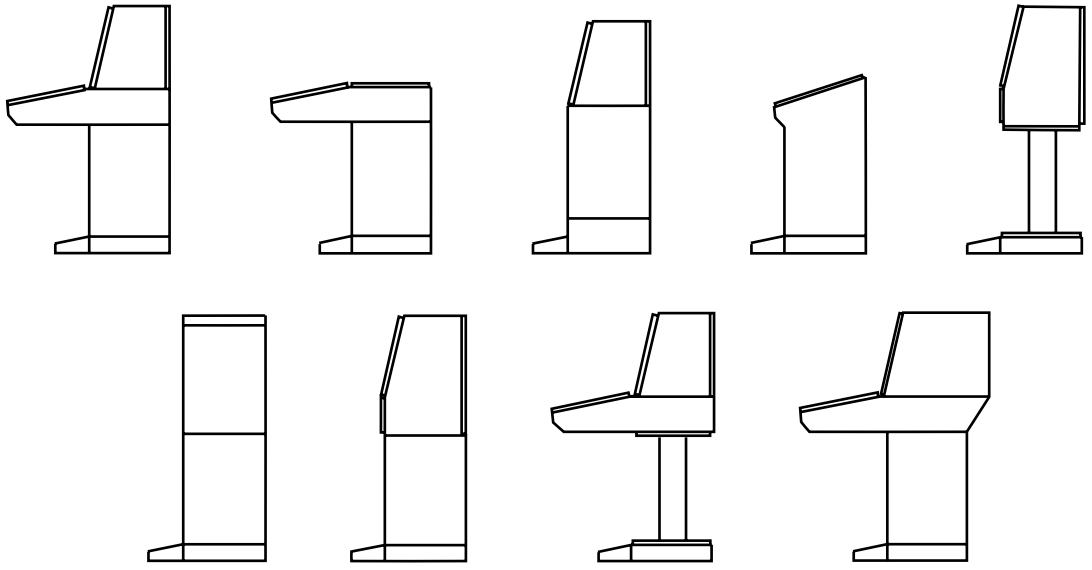

How to Configure your System

To configure your system you’ll need to go through the following steps:

Step 1 - Protection requirements

- Type 4 RAL 7035 light gray = “2CL…” part numbers
- Type 4X stainless steel = “2CS…” part numbers

Step 2 - Width requirements (24, 36, 48, 60 inch)

Step 3 - Basic component requirements:

- Bottom - (a) base, (b) dual access base, or (c) pedestal
- Top - (a) standard desk and desk cover, (b) deep desk and desk cover, (c) standard turret, (d) deep turret, (e) standard desk/turret combination, (f) deep desk/turret combination, (g) another base and base cover, or (h) data terminal
- Stand Alone - Consolet

Step 4 - External Accessories (if applicable): plinth, footrest, window doors or depth extension

Step 5 - Internal Accessories (if applicable): electrical mounting panels, electronic mounting rails, swing frames, etc.

© Hammond Manufacturing

Type 4, 4X Mild Steel and Stainless Steel Base Units *Series 2000*

Modular Console System

Quick Link: hammfg.com/S2CB

Application

- Flexible design provides panel mount or rack mount capabilities for a variety of applications.
- Generally used in combination with other modular console components (ie. another base, terminal, desk and/or turret).
- Available in either single or dual access format.
- Smooth lines and clean edges provide an attractive, contemporary appearance.

Standards

- UL 508A Type 3R, 4,12
- CSA Type 3R, 4, 12, 13
- EIA RS-310-D
- Complies with
  - NEMA Type 3R, 4, 12
  - IEC 60529, IP66

Construction

- Formed 14 gauge steel bodies with 14 gauge steel door.
- Also offered with formed 14 gauge 304 stainless steel bodies with 14 gauge 304 stainless steel door.
- Smooth, continuously welded seams.
- Body stiffeners are provided where required for increased strength and rigidity.
- Offered in 4 widths 24”, 36”, 48” and 60”.
- Single access version has solid sides and back, solid door on front, open top, and closed bottom with removable access panel.
- Dual access version is same as above except has solid door on both front and back.
- 24” and 36” widths have single door on the front (and back for dual access) whereas 48” and 60” widths have two outside hinged doors on the front (and back for dual access).
- Doors can be hinged from either side on 24” and 36” units.
- Door profiles provide increased strength and are pre-punched to provide mounting options.
- Formed lip on enclosure excludes flowing liquids and contaminants.
- Slotted quarter turn oil-tight latches secure the door, with optional tamper resistant and locking latches available.
- Stainless steel models utilize stainless steel hardware.
- Oil resistant gaskets are permanently secured.
- Features several internal stud locations for mounting of various accessories.
- A bonding screw is provided on the door and a grounding stud is provided in the enclosure.

Finish

- Available in RAL 7035 light gray textured powder coating and natural stainless steel with a smooth, brushed finish.
- Base Covers are available in the same finishes.

Accessories

- S2000 Internal Components...*See Page* ***155***
- S2000 External Components...*See Page* ***159***
- Quarter Turn Assemblies...*See Page* ***273***
- Quarter Turn Inserts and Keys...*See Page* ***273***
- Padlock Adaptor...*See Page* ***272***
- Climate Control...*See Page* ***234***
- Lighting...*See Page* ***298***
- General Accessories...*See Page* ***268***

Single Access

RAL 7035 Light Gray Part No.	Stainless Steel Part No.	Enclosure H	W	D
2CLB262418	2CSB262418	26.00	24.00	17.30
2CLB263618	2CSB263618	26.00	36.00	17.30
2CLB264818	2CSB264818	26.00	48.00	17.30
2CLB266018	2CSB266018	26.00	60.00	17.30

Dual Access

RAL 7035 Light Gray Part No.	Stainless Steel Part No.	Enclosure H	W	D
2CLBX262418	2CSBX262418	26.00	24.00	16.50
2CLBX263618	2CSBX263618	26.00	36.00	16.50
2CLBX264818	2CSBX264818	26.00	48.00	16.50
2CLBX266018	2CSBX266018	26.00	60.00	16.50

Distributed by Gross Automation | +1 (262) 252-1600. | hammondsales@grossautomation.com

Technical references and CAD downloads available at www.hammondmfg.com

All dimensions in inches unless specified otherwise

Quality Products. Service Excellence.

© Hammond Manufacturing

Canada: 519.822.2960 or 905.456.3770 USA: 716.630.7030

Data Subject to change without notice

Type 4, 4X Mild Steel and Stainless Steel Desk Units *Series 2000*

Modular Console System

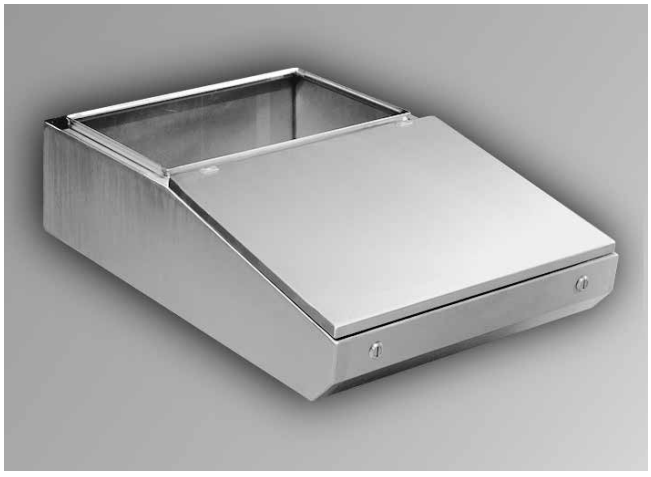

Quick Link: hammfg.com/S2CD

Application

- Generally used in combination with other modular console components (ie. base, pedestal, and/or turret).
- Provides an ideal sloped surface for mounting keyboards, switches, indicator lights, and/or dials.
- Open top permits mounting of a turret (usually for CRT applications) or an optional hinged desk cover (providing a flat, sturdy desk surface).
- Available in either Standard (will support Standard Turret only) or Deep (will support Deep Turret only) format.
- Smooth lines and clean edges provide an attractive, contemporary appearance.

Standards

- UL 508A Type 3R, 4,12
- CSA Type 3R, 4, 12, 13
- EIA RS-310-D
- Complies with
  - NEMA Type 3R, 4, 12
  - IEC 60529, IP66

Construction

- Formed 14 gauge steel bodies with 14 gauge steel lid.
- Also offered with formed 14 gauge 304 stainless steel bodies with 14 gauge 304 stainless steel lid.
- Smooth, continuously welded seams without knockouts or holes.
- Body stiffeners are provided where required for increased strength and rigidity.
- Offered in 4 widths 24”, 36”, 48” and 60”.
- Solid sides and back, lid on sloped top area, open on flat top area, bottom is solid under lid area and open under flat top area.
- Deep Desk has a 6.7” deeper top opening than standard desk allowing for support of Deep Turret - see drawings as Deep Desk has different profile (angled back) from Standard Desk (flat back.)
- Lid profiles provide increased strength.
- Formed lip on enclosure excludes flowing liquids and contaminants.
- Slotted quarter turn oil-tight latches secure the lid, with optional tamper resistant and locking latches available.
- Stainless steel models utilize stainless steel hardware.
- Oil resistant gaskets are permanently secured.
- Features several internal stud locations for mounting Desk Inner Panel.
- A bonding screw is provided on the lid and a grounding stud is provided in the enclosure.

Finish

- Available in RAL 7035 light gray textured powder coating and natural stainless steel with a smooth, brushed finish.
- Desk covers available in same finishes.

Accessories

- Desk Cover...*See Page* ***161***
- Desk Inner Panel...*See Page* ***155***

Standard Depth Desk

RAL 7035 Light Gray	Stainless Steel	Enclosure		
Part No.	Part No.	H	W	D
2CLD82436	2CSD82436	8.50	24.00	36.68
2CLD83636	2CSD83636	8.50	36.00	36.68
2CLD84836	2CSD84836	8.50	48.00	36.68
2CLD86036	2CSD86036	8.50	60.00	36.68

Extra Deep Desk

RAL 7035 Light Gray	Stainless Steel	Enclosure		
Part No.	Part No.	H	W	D
2CLD82443	2CSD82443	8.50	24.00	43.38
2CLD83643	2CSD83643	8.50	36.00	43.38
2CLD84843	2CSD84843	8.50	48.00	43.38
2CLD86043	2CSD86043	8.50	60.00	43.38

Distributed by Gross Automation | +1 (262) 252-1600 | hammondsales@grossautomation.com

Technical references and CAD downloads available at www.hammondmfg.com

All dimensions in inches unless specified otherwise

© Hammond Manufacturing

Type 4, 4X Mild Steel and Stainless Steel Turret Units *Series 2000*

Modular Console System

Quick Link: hammfg.com/S2CT

Application

- Ideal as a housing for video screens.
- Flexible design provides panel mount or rack mount capabilities for a variety of applications.
- Generally used in combination with other modular console components (ie. base, pedestal, and/or desk).
- Available in either Standard (supported by Base, Pedestal, or Standard Desk) or Deep (supported by Deep Desk only) format.
- Smooth lines and clean edges provide an attractive, contemporary appearance.

Standards

- UL 508A Type 3R, 4,12
- CSA Type 3R, 4, 12, 13
- EIA RS-310-D
- Complies with
  - NEMA Type 3R, 4, 12
  - IEC 60529, IP66

Construction

- Formed 14 gauge steel bodies with 14 gauge steel doors. Also offered with formed 14 gauge 304 stainless steel bodies with 14 gauge 304 stainless steel doors.
- Smooth, continuously welded seams without knockouts or holes.
- Body stiffeners are provided where required for increased strength and rigidity.
- Offered in 4 widths 24”, 36”, 48” and 60”.
- Features solid sides and top, solid door on front (opens down) and back (opens up), and open bottom.
- Front door features sliding rod mechanism, which allows a 102º opening when in the lowered position.
- Rear door features manual, 3 position adjustable door stop which provides convenient support while door in open position.
- Formed lip on enclosure excludes flowing liquids and contaminants.
- Slotted quarter turn oil-tight latches secure the door, with optional tamper resistant and locking latches available.
- Stainless steel models utilize stainless steel hardware.
- Oil resistant gaskets are permanently secured.
- Features several internal stud locations for mounting of various accessories.
- A bonding screw is provided on the door and a grounding stud is provided in the enclosure.

Finish

- Available in RAL 7035 light gray textured powder coating and natural stainless steel with a smooth, brushed finish.
- 24” Front Window Door available in same finishes.

Accessories

- S2000 Internal Components...*See Page* ***155***
- S2000 External Components...*See Page* ***159***
- Quarter Turn Assemblies...*See Page* ***273***
- Quarter Turn Inserts and Keys...*See Page* ***273***
- Padlock Adaptor...*See Page* ***272***
- Climate Control...*See Page* ***234***
- Lighting...*See Page* ***298***
- General Accessories...*See Page* ***268***

Standard Depth Turret

RAL 7035 Light Gray	Stainless Steel	Enclosure			
Part No.	Part No.	H	W	D1	D2
2CLT202436	2CST202436	20.00	24.00	12.38	16.62
2CLT203636	2CST203636	20.00	36.00	12.38	16.62
2CLT204836	2CST204836	20.00	48.00	12.38	16.62
2CLT206036	2CST206036	20.00	60.00	12.38	16.62

Extra Deep Turret

RAL 7035 Light Gray	Stainless Steel	Enclosure			
Part No.	Part No.	H	W	D1	D2
2CLT202443	2CST202443	20.00	24.00	16.62	23.31
2CLT203643	2CST203643	20.00	36.00	16.62	23.31
2CLT204843	2CST204843	20.00	48.00	16.62	23.31
2CLT206043	2CST206043	20.00	60.00	16.62	23.31

Distributed by Gross Automation | +1 (262) 252-1600. | hammondsales@grossautomation.com

Technical references and CAD downloads available at www.hammondmfg.com

All dimensions in inches unless specified otherwise

Quality Products. Service Excellence.
© Hammond Manufacturing
Canada: 519.822.2960 or 905.456.3770 USA: 716.630.7030
Data Subject to change without notice

Type 4, 4X Mild Steel and Stainless Steel Consolet *Series 2000*

Modular Console System

Quick Link: hammfg.com/S2CC

Application

- Serves as an economical housing for operator interface applications.
- Provides an ideal sloped surface for mounting keyboards, switches, indicator lights, and/or dials.
- Provides panel mounting capabilities for a variety of applications. Generally used as a stand alone enclosure. Possible to put side by side with base on a single plinth (ie. 36" wide consolet with 24" base with terminal all together on a 60" plinth.
- Optional casters (require plinth) allow for a completely mobile, NEMA rated work station.
- Smooth lines and clean edges provide an attractive, contemporary appearance.

Standards

- UL 508A Type 3R, 4,12
- CSA Type 3R, 4, 12, 13
- EIA RS-310-D
- Complies with
  - NEMA Type 3R, 4, 12
  - IEC 60529, IP66

Construction

- Formed 14 gauge steel bodies with 14 gauge steel door and lid.
- Also offered with formed 14 gauge 304 stainless steel bodies with 14 gauge 304 stainless steel door and lid.
- Smooth, continuously welded seams without knockouts or holes.
- Body stiffeners are provided where required for increased strength and rigidity.
- Offered in 4 widths 24", 36", 48" and 60".
- Has solid sides and back, solid door on front, 3 point adjustable lid on sloped (20°) top, and closed bottom with removable access panel.
- 24" and 36" widths have single door on the front whereas 48" and 60" widths have two outside hinged doors on the front.
- Doors can be hinged from either side on 24" and 36" units.
- Door profiles provide increased strength and are pre-punched to provide mounting options.
- Formed lip on enclosure excludes flowing liquids and contaminants.
- Slotted quarter turn oil-tight latches secure the door and lid, with optional tamper resistant and locking latches available.
- Stainless steel models utilize stainless steel hardware.
- Oil resistant gaskets are permanently secured.
- Features internal stud locations for mounting optional inner panel.
- A bonding screw is provided on the door and a grounding stud is provided in the enclosure.

Finish

- Available in RAL 7035 light gray textured powder coating and natural stainless steel with a smooth, brushed finish.

Accessories

- Consolet Panel...*See Page* ***155***
- Quarter Turn Assemblies...*See Page* ***273***
- Quarter Turn Inserts and Keys...*See Page* ***273***
- Modular Plinth...*See Page* ***160***
- Footrest...*See Page* ***160***
- Climate Control...*See Page* ***234***
- Padlock Adaptor...*See Page* ***272***
- Lighting...*See Page* ***298***
- General Accessories...*See Page* ***268***

RAL 7035 Light Gray	Stainless Steel	Enclosure			
Part No.	Part No.	H1	H2	W	D
2CLC2024	2CSC2024	30.36	38.03	24.00	17.30
2CLC2036	2CSC2036	30.36	38.03	36.00	17.30
2CLC2048	2CSC2048	30.36	38.03	48.00	17.30
2CLC2060	2CSC2060	30.36	38.03	60.00	17.30

Distributed by Gross Automation | +1 (262) 252-1600. | hammondsales@grossautomation.com

Technical references and CAD downloads available at www.hammondmfg.com

All dimensions in inches unless specified otherwise

© Hammond Manufacturing

Type 4, 4X Mild Steel and Stainless Steel Terminal *Series 2000*

Modular Console System

Quick Link: hammfg.com/S2CDT

Application

- Ideal as a housing for a complete personal computer system including video screen, keyboard and PLC.
- Flexible design provides panel mount or rack mount capabilities for a variety of applications.
- Generally used in combination with other modular console components (ie. base or pedestal). Mounting on base provides extra room for PLC's and/or printer-paper stands.
- Optional casters (require plinth) allow for a completely mobile, NEMA rated work station.
- Smooth lines and clean edges provide an attractive, contemporary appearance.

Standards

- UL 508A Type 3R, 4,12
- CSA Type 3R, 4, 12, 13
- EIA RS-310-D
- Complies with
  - NEMA Type 3R, 4, 12
  - IEC 60529, IP66

Construction

- Formed 14 gauge steel bodies with 14 gauge steel doors.
- Also offered with formed 14 gauge 304 stainless steel bodies with 14 gauge 304 stainless steel doors.
- Smooth, continuously welded seams.
- Body stiffeners are provided where required for increased strength and rigidity.
- Offered in 24" width only.
- Features solid sides and top, 2 solid doors on front (both open downlower, smaller door for keyboard shelf) and back (opens up), and open bottom.
- Lower drop down door provides access to optional slide-out keyboard drawer.
- Front doors feature sliding rod mechanism which allows a 102° opening when in the lowered position.
- Rear door features manual, 3 position adjustable door stop which provides convenient support while door in open position.
- Formed lip on enclosure excludes flowing liquids and contaminants.
- Slotted quarter turn oil-tight latches secure the door, with optional tamper resistant and locking latches available.
- Stainless steel models utilize stainless steel hardware.
- Oil resistant gaskets are permanently secured.
- Features several internal stud locations for mounting of various accessories.
- A bonding screw is provided on the door and a grounding stud is provided in the enclosure.

Finish

- Available in RAL 7035 light gray textured powder coating and natural stainless steel with a smooth, brushed finish.
- 24" Front Window Door available in same finishes.

Accessories

- S2000 Internal Components...*See Page* ***155***
- S2000 External Components...*See Page* ***159***
- Quarter Turn Assemblies...*See Page* ***273***
- Quarter Turn Inserts and Keys...*See Page* ***273***
- Padlock Adaptor...*See Page* ***272***
- Climate Control...*See Page* ***234***
- Lighting...*See Page* ***298***
- General Accessories...*See Page* ***268***

RAL 7035 Light Gray	Stainless Steel	Enclosure			
Part No.	Part No.	H	W	D1	D2
2CLD24R	2CSD24R	28.50	24.00	16.63	12.38

Distributed by Gross Automation | +1 (262) 252-1600. | hammondsales@grossautomation.com

Technical references and CAD downloads available at www.hammondmfg.com

All dimensions in inches unless specified otherwise

Quality Products. Service Excellence.

© Hammond Manufacturing

Canada: 519.822.2960 or 905.456.3770 USA: 716.630.7030

Data Subject to change without notice

Base Panel

- 14 gauge steel panels are finished in white.
- Used in both single access and dual access bases.
- Available in 4 widths.
- Mounts into “C” Channel Mounting Kit (not included.)
- Hardware required for mounting into “C” channels is included.

	Fits Base			
Part No.	Width	Height	Width	Depth
2CWBP24	24.00	22.50	20.00	0.75
2CWBP36	36.00	22.50	32.00	0.75
2CWBP48	48.00	22.50	44.00	0.75
2CWBP60	60.00	22.50	56.00	0.75

Consolet Panel

- 12 gauge steel panels.
- Available in 4 widths.
- Mounts onto panel mounting studs in consolet.
- Finished in white.

	Fits			
Part No.	Consolet Width	Height	Width	Depth
2CWCP24	24.00	30.50	20.50	0.75
2CWCP36	36.00	30.50	32.50	0.75
2CWCP48	48.00	30.50	44.50	0.75
2CWCP60	60.00	30.50	56.50	0.75

Desk Inner Panel

- 12 gauge steel panels.
- Used in both Standard and
- Deep desks.
- Available in 4 widths.
- Mounts horizontally onto panel mounting channels in bottom of desk.
- Finished in white.

	Fits			
Part No.	Consolet Width	Height	Width	Depth
2CWDP24	24.00	0.50	22.00	16.00
2CWDP36	36.00	0.50	34.00	16.00
2CWDP48	48.00	0.50	46.00	16.00
2CWDP60	60.00	0.50	58.00	16.00

Distributed by Gross Automation | +1 (262) 252-1600. | hammondsales@grossautomation.com

Technical references and CAD downloads available at www.hammondmfg.com

All dimensions in inches unless specified otherwise

© Hammond Manufacturing

Canada: 519.822.2960 or 905.456.3770 USA: 716.630.7030

Data Subject to change without notice

Terminal Keyboard Shelf

- Designed specifically for use in Data Terminal.
- Sloped wrist rest provides comfort for operator.
- Locks in place when extended.
- 20” width accommodates standard width keyboards.
- Finished in textured black.
- Slides included.
- Slide-out mouse pad (left or right) included.

Part No.	Height	Width	Depth
2CWDSR	3.88	20	15.63

Swing Frame

For use with Series 2000 Enclosures

- Available in 19” and 24” widths.
- Variable depth feature allows front to rear adjustment.
- Installs with either left or right hinging.
- Mounts onto Rail Support Kits (not included).
- Clip nuts required for mounting to punched rails.
- Finished in textured black.

Part No.	Fits Console Unit	Fits Console Size	Panel Width	Panel Height	A	B
2CSFT19	Turrets/Terminal	24,36,48,60	19”	8U	15.75	19.28
2CSFT24	Turrets/Terminal	36,48,60	24”	8U	15.75	24.28
2CSFB19	Bases	24,36,48,60	19”	12U	22.09	19.28
2CSFB24	Bases	36,48,60	24”	12U	22.09	24.28

“C” Channel Mounting Kit

- For use in Turrets, Data Terminals and Bases.
- Provide adjustable (side to side) mounting support for Base Panels and all Rail Support Kits.
- Available in 4 widths.
- Finished in textured black.

Part No.	Fits Console Width	A
2CMC24	24.00	23.50
2CMC36	36.00	33.50
2CMC48	48.00	47.50
2CMC60	60.00	59.50

Distributed by Gross Automation | +1 (262) 252-1600. | hammondsales@grossautomation.com

Technical references and CAD downloads available at www.hammondmfg.com

All dimensions in inches unless specified otherwise

Quality Products. Service Excellence.
© Hammond Manufacturing
Canada: 519.822.2960 or 905.456.3770 USA: 716.630.7030
Data Subject to change without notice

Rail Support Kit

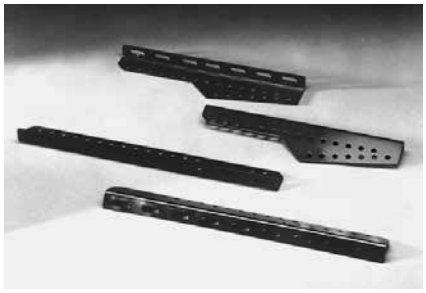

- Separate kits for Standard Turret/Data Terminal, Deep Turret and Bases.
- For use with Swing Frame, CRT Mounting Kit and Combination Rails.
- Mount into “C” channels (not included).
- Finished in textured black.

Part No.	Fits Console Unit
2CTRSK36	Turret/Terminal
2CTRSK43	Deep Turret
2CBRSK	Base

Combination Rails

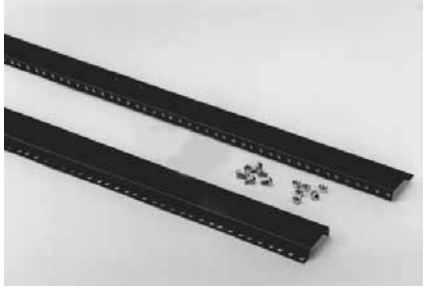

- Features punched universal EIA spacing.
- Mounts onto Rail Support Kits (not included - see above).
- Clip nuts required for mounting to punched rails
- Finished in black.

Part No.	Units	Fits Console Unit
2CTRK	9	Turrets/Terminal
2CBRK	13	Base

CRT Mounting Kit

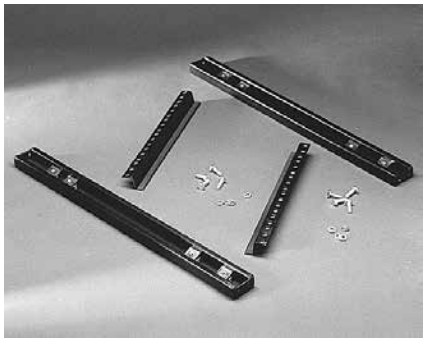

- Adjustable width allows for mounting of most CRT models.
- For use in Turrets or Data Terminal.
- Mounts onto Rail Support Kits (not included - see above).
- Finished in textured black.

Part No.	2CRTK

Distributed by Gross Automation | +1 (262) 252-1600. | hammondsales@grossautomation.com

Technical references and CAD downloads available at www.hammondmfg.com

All dimensions in inches unless specified otherwise

© Hammond Manufacturing

Canada: 519.822.2960 or 905.456.3770 USA: 716.630.7030

Data Subject to change without notice

Printer and Paper Stand

- Provides convenient pullout access and support for printers in bases.
- Two versions available for high or low applications.
- Mounts onto Combination Rails (not included).
- Finished in textured black.
- Slides included.

Part No.	Description	Height
2CLPS	Low Printer Stand	7.00
2CHPS	High Printer Stand	12.25

Gas Filled Door Support

- Provide “lift assist” and door support for rear Turret/Data Terminal doors and Desk lids.
- Replace standard manual door supports.
- Minimum enclosure width of 16” is required
- Finished in black.
- Sold individually.
- Recommend 1 for 24”/36” and 2 for 48”/60”.

Part No.	2CDSTP

DIN Rail Support Kit

- Provide adjustable mounting support for DIN rails (sold separately.)
- For use in Bases only.
- Mount into “C” channels (not included).

Part No.	2CDMK

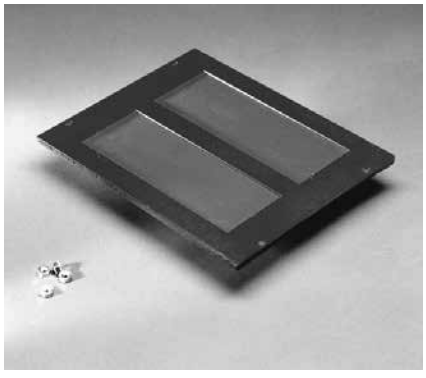

Micro Cell Cable Entry Kit

- For use in Single or Dual Access Bases.
- Constructed of 14 gauge steel.
- Features 2 cutouts for cable access.
- Underside of cutouts covered with black foam rubber, which when punctured for cable access, still maintains a virtually sealed bottom.
- Finished in textured black.

Part No.	2CMBPK

© Hammond Manufacturing

Mobile Keyboard Support

- Installs easily at any location along front of Desks or Consolet.
- Provides temporary keyboard support.
- 20” width accommodates standard width keyboards.
- Finished in textured black.

Part No.	2CMKS75

Pedestal

- Maintains NEMA rating of system.
- Formed 14 gauge steel.
- Also offered with formed 14 gauge stainless steel.
- Stiffeners added for solid stability.
- Open top and bottom provides an unobstructed wireway for pull through cabling.
- Can be mounted directly on floor or on a plinth.
- Available in light gray and stainless steel.

Part No.	Finish
2CLS	RAL7035 Light Gray
2CSS	Stainless Steel

Data Terminal Extension Ring

- Formed 14 gauge steel.
- Adds 6” to Data Terminal Depth.
- Maintains NEMA rating.
- Utilizes door from Data Terminal.
- Fastens flush to back of Data Terminal.
- Available in light gray and natural stainless steel.

Part No.	Finish
2CLD24X	ANSI 61 Gray (smooth)
2CSD24X	Stainless Steel

Turret/Terminal Window Door

- Maintains the NEMA rating of the enclosure.
- Constructed of 14 gauge steel and lexan window.
- Easy field installation.
- Fits Standard Turret, Deep Turret, and Data Terminal.
- Offered in 24” width only.
- Available in light gray and stainless steel.

Part No.	Finish
2CLTW24	RAL7035 Light Gray (textured)
2CSTW24	Stainless Steel

Distributed by Gross Automation | +1 (262) 252-1600. | hammondsales@grossautomation.com

Technical references and CAD downloads available at www.hammondmfg.com

All dimensions in inches unless specified otherwise

© Hammond Manufacturing

Modular Plinth

- Features removable front and rear panels for easy access to bottom for cabling or transport by forklift.
- For cable access, features 3 double knockouts on each end.
- Available in 4" and 8" heights.
- Available in 24", 36", 48" and 60" widths.
- Maintains NEMA rating of system.
- Formed 14 gauge steel.
- Also offered with formed 14 gauge stainless steel.
- Available in light gray and stainless steel.

RAL 7035 Light Gray Part No.	Stainless Steel Part No.	A	B1	B2
2CLP42418	2CSP42418	4.00	24.00	-
2CLP43618	2CSP43618	4.00	36.00	-
2CLP44818	2CSP44818	4.00	-	48.00
2CLP46018	2CSP46018	4.00	-	60.00
2CLP82418	2CSP82418	8.00	24.00	-
2CLP83618	2CSP83618	8.00	36.00	-
2CLP84818	2CSP84818	8.00	-	48.00
2CLP86018	2CSP86018	8.00	-	60.00

Footrest

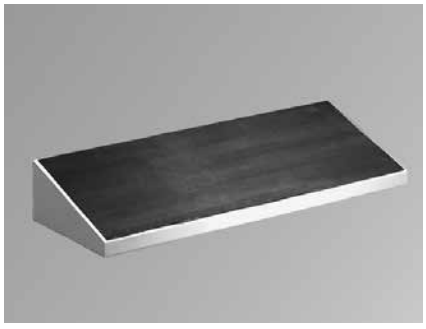

- Generally used in combination with plinth.
- Provides a raised foot support to relieve back stress.
- Gives the installation a "finished" appearance.
- Available in 24", 36", 48" and 60" widths.
- Maintains NEMA rating of system.
- Formed 14 gauge steel.
- Also offered with formed 14 gauge stainless steel.
- Rubber tread for added traction on footrest surface.
- Available in light gray and natural stainless steel.

RAL 7035 Light Gray Part No.	Stainless Steel Part No.	B
2CLF24	2CSF24	24.00
2CLF36	2CSF36	36.00
2CLF48	2CSF48	48.00
2CLF60	2CSF60	60.00

Base Cover

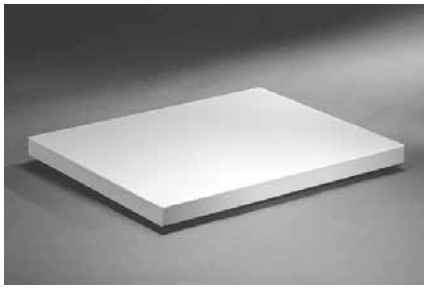

- Should be used to close top opening (of either single or dual access) base when no other components are mounted on the base's top.
- Constructed of 14 gauge steel.
- Available light gray and stainless steel.
- Can also be used on the underside of a Standard Desk Unit, Standard Turret and Data Terminal.

RAL 7035 Light Gray Part No.	Stainless Steel Part No.	B
2CLBC2436	2CSBC2436	24.00
2CLBC3636	2CSBC3636	36.00
2CLBC4836	2CSBC4836	48.00
2CLBC6036	2CSBC6036	60.00

Distributed by Gross Automation | +1 (262) 252-1600. | hammondsales@grossautomation.com

Technical references and CAD downloads available at www.hammondmfg.com

All dimensions in inches unless specified otherwise

© Hammond Manufacturing

Desk Cover

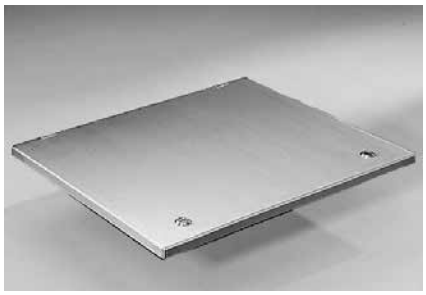

- For use when no turret is used on top of desk.
- Provides a hinged, flat, sturdy desk surface.
- Available for either Standard or Deep desks.
- Constructed of 14 gauge steel.
- Features quarter turn latches for easy access into flat desk top.
- Available in light gray and stainless steel.

RAL 7035 Light Gray Part No.	Stainless Steel Part No.	B1	B2	B3	C
Standard Depth Desk Cover					
2CLDC2436	**2CSDC2436**	23.75	-	-	16.38
2CLDC3636	**2CSDC3636**	-	35.75	-	16.38
2CLDC4836	**2CSDC4836**	-	-	47.75	16.38
2CLDC6036	**2CSDC6036**	-	-	59.75	16.38
Deep Depth Desk Cover					
2CLDC2443	**2CSDC2443**	23.75	-	-	24.03
2CLDC3643	**2CSDC3643**	-	35.75	-	24.03
2CLDC4843	**2CSDC4843**	-	-	47.75	24.03
2CLDC6043	**2CSDC6043**	-	-	59.75	24.03

Base Window Door

- Maintains the NEMA rating of the enclosure.
- Constructed of 14 gauge steel and lexan window.
- Easy field installation.
- Available for the 4 base widths.
- On 2 door units, a window can be installed on one side only.
- Available in light gray and stainless steel.

RAL 7035 Light Gray Part No.	Stainless Steel Part No.	Fits Base Width	B	C
2CLBW24	**2CSBW24**	24.00	23.75	16.75
2CLBW36	**2CSBW36**	36.00	35.75	28.75
2CLBW48	**2CSBW48**	48.00	23.75	16.75
2CLBW60	**2CSBW60**	60.00	29.75	22.75

Console Casters

- Locking and non-locking versions.
- Mount directly to plinths.
- Sold in pairs to provide ability to mix locking and non-locking.
- Recommend 4 casters for 24”/36” and 6 casters for 48”/60”.
- Weight capacity of 500 lbs. per pair.

Part No.	Type	No. of Casters
2CCSTL	Locking	2
2CCSTN	Non-Locking	2

Distributed by Gross Automation | +1 (262) 252-1600. | hammondsales@grossautomation.com

Technical references and CAD downloads available at www.hammondmfg.com

All dimensions in inches unless specified otherwise

© Hammond Manufacturing

Type 12 Consolets *1488 Series*

Hinged Cover

Quick Link: hammfg.com/1488

Application

- Designed for use as electric, hydraulic or pneumatic control and instrument enclosures.
- Ideal for flat or surface mounting/pedestal to provide the necessary 30° or 60° control slope.
- Provides protection from dirt, dust, oil and water.

Standards

- UL 508A Type 12, 13
- CSA Type 12, 13
- Complies with
  - NEMA Type 12, 13
  - IEC 60529, IP54

Construction

- Formed 14 gauge steel.
- Smooth, continuously welded seams.
- Construction provides either 30° or 60° slope on front cover depending on mounting position.
- Continuously hinged cover may be removed by pulling the hinge pin.
- Captive cover screws thread into sealed wells.
- Oil resistant gasket and adhesive.
- A bonding stud is provided on the door and a ground stud is provided on the enclosure.

Finish

- Cover and enclosure are phosphatized and finished in ANSI 61 gray powder coating.

Accessories

- Pedestal and Base...*See Page* ***303***
- Climate Control...*See Page* ***234***
- General Accessories...*See Page* ***268***

	Enclosure				
Part No.	Cover H	H1	H2	W	D
1488EE7	8.00	2.50	7.16	8.00	7.44
1488EH7	8.00	2.50	7.16	12.00	7.44
1488EJ7	8.00	2.50	7.16	16.00	7.44
1488EL7	8.00	2.50	7.16	20.00	7.44
1488HH9	12.00	2.50	9.16	12.00	10.90
1488HJ9	12.00	2.50	9.16	16.00	10.90
1488HL9	12.00	2.50	9.16	20.00	10.90
1488HN9	12.00	2.50	9.16	24.00	10.90
1488JJ11	16.00	2.50	11.16	16.00	14.37
1488JL11	16.00	2.50	11.16	20.00	14.37
1488JN11	16.00	2.50	11.16	24.00	14.37
1488JQ11	16.00	2.50	11.16	30.00	14.37
1488JS11	16.00	2.50	11.16	36.00	14.37
1488LL13	20.00	2.50	13.16	20.00	17.83
1488LN13	20.00	2.50	13.16	24.00	17.83
1488LQ13	20.00	2.50	13.16	30.00	17.83

Distributed by Gross Automation | +1 (262) 252-1600. | hammondsales@grossautomation.com

Technical references and CAD downloads available at www.hammondmfg.com

All dimensions in inches unless specified otherwise

© Hammond Manufacturing

Quality Products. Service Excellence.

Canada: 519.822.2960 or 905.456.3770 USA: 716.630.7030

Data Subject to change without notice

Type 12 Console Cabinet *1471 Series*

Sloped Front, Continuous Hinged Cover

Quick Link: hammfg.com/1471

Application

- Designed to house electrical, electronic, hydraulic or pneumatic controls and instruments.
- Heavy-duty construction provides protection from dirt, dust, oil and water.
- Sloping front control panel provides an ideal surface for mounting operator controls or instrumentation.
- Interior mounting provision on removable inner panels located on the rear and sides of the enclosure.

Standards

- UL 508A Type 12
- CSA Type 12
- Complies with
  - NEMA Type 12
  - IEC 60529, IP54

Construction

- Formed 14 gauge steel.
- Smooth, continuously welded seams, without knockouts, cutouts or holes.
- Sloped front instrument panel is continuously hinged on the front (bottom) edge and secured with captive panel screws, threaded into sealed wells.
- Continuously hinged door and front instrument panel may be removed by pulling the hinge pin.
- Doors are secured with a three point latch and operated with a key locking automotive type handle.
- Oil resistant gaskets are permanently secured.
- Includes three removable inner panels formed from 12 gauge steel, mounted to the back and sides of the enclosure interior.
- Collar studs are provided for mounting inner panels.
- A bonding stud is provided on the door and a grounding stud is provided in the enclosure for each door.
- A literature pocket is provided for the inside of the door.

Finish

- Cover and enclosure are phosphatized and finished in ANSI 61 gray powder coating on the outside and on the inside.
- Removable inner panels are finished in white powder coating.

Accessories

- Door Stop Kit...*See Page* ***304***
- Type 12 Handle Kits...*See Page* ***271***
- Window Kits...*See Page* ***294***
- Climate Control...*See Page* ***234***
- Lighting...*See Page* ***298***
- General Accessories...*See Page* ***268***

	Enclosure				Panel	
Part No.	H1	H2	W	D	H	W
1471C24	32.00	48.00	24.00	18.00	27.00	17.00
1471C36	32.00	48.00	36.00	18.00	27.00	29.00

Distributed by Gross Automation | +1 (262) 252-1600. | hammondsales@grossautomation.com

Technical references and CAD downloads available at www.hammondmfg.com

All dimensions in inches unless specified otherwise

© Hammond Manufacturing

Canada: 519.822.2960 or 905.456.3770 USA: 716.630.7030

Data Subject to change without notice

Type 12 Modular Console Cabinet *1472 Series*

Sloped Front

Quick Link: hammfg.com/1472

Application

- Designed to house electrical, electronic, hydraulic or pneumatic controls and instruments.
- Heavy-duty construction provides protection from dirt, dust, oil and water. Sloping front control and instrument panels provide an ideal surface for mounting operator controls or instrumentation.
- Interior mounting is provided for with a removable inner panel located on the rear of the basic console.

Standards

- UL 508A Type 12
- CSA Type 12
- Complies with
  - NEMA Type 12
  - IEC 60529, IP65

Base Console Construction

- Formed 14 gauge steel.
- Smooth, continuously welded seams, without knockouts, cutouts or holes.
- Sloped front instrument panel is continuously hinged on the front (bottom) edge and secured with captive panel screws, threaded into sealed wells.
- Front instrument panel may be removed by pulling the hinge pin.
- Flush doors are secured with a three point latch and operated with a key locking automotive type handle.
- Two door model has overlapping front doors, with three point latch on right door.
- Oil resistant gaskets are permanently secured.
- Includes a removable inner panel formed from 12 gauge steel, mounted to the back of the enclosure interior.
- Collar studs are provided for mounting inner panels.
- A bonding stud is provided on the door and a grounding stud is provided in the enclosure for each door.
- A literature pocket is provided.

Turret Construction

- Formed and welded from 14 gauge steel.
- Sloping instrument panel and vertical rear access are completely removable.
- Captive panel screws fasten into sealed wells.

Writing Surface Construction

- Formed and welded from 14 gauge steel.
- Fastens to the front of the console with screws

Finish

- Cover and enclosure are phosphatized and finished in ANSI 61 gray powder coating on the outside and on the inside.
- Removable inner panels are finished in white powder coating.

Accessories

- Door Stop Kit...*See Page* ***304***
- Type 12 Handle Kits...*See Page* ***271***
- Window Kits...*See Page* ***294***
- Climate Control...*See Page* ***234***
- Lighting...*See Page* ***298***
- General Accessories...*See Page* ***268***

Base Console

	Enclosure					Panel	
Part No.	H1	H2	W	D1	D2	H	W
1472-24[1]	36.00	40.00	24.00	17.00	20.00	18.75	27.25
1472-36[1]	32.00	36.00	36.00	20.00	24.00	30.00	32.00
1472-48[1,2]	32.00	36.00	48.00	20.00	24.00	42.00	32.00

[1] UL Listed
[2] 2 Door Version

Turret

Part No.	H	W	D1	D2
1472-24T	16.00	24.00	5.00	3.00
1472-36T	20.00	36.00	10.00	6.00
1472-48T	20.00	48.00	10.00	6.00

Writing Surface

Part No.	H	W	D
1472-24W	4.00	24.00	10.00
1472-36W	4.00	36.00	10.00
1472-48W	4.00	48.00	10.00

Distributed by Gross Automation | +1 (262) 252-1602 | hammondsales@grossautomation.com

Technical references and CAD downloads available at www.hammondmfg.com

All dimensions in inches unless specified otherwise

© Hammond Manufacturing

Eclipse Command System - NEMA 12 *ECP Series*

Command Enclosure

Quick Link: hammfg.com/ECP

Application

- Designed to enclose electronic controls, instruments and components in indoor environments where dirt, dust, oil and water may be present.
- Ideal for use with suspension systems.
- Multiple mounting provisions and full front mounting space provide for ideal operator interface.
- Smooth flush surfaces and attractive finishes compliment high tech equipment.

	Enclosure			Optional Panel
Part No.	H	W	D	Part No.
ECP12126	12.00	12.00	6.00	ECPP1212
ECP12168	12.00	16.00	8.00	ECPP1216
ECP161610	16.00	16.00	10.00	ECPP1616
ECP162010	16.00	20.00	10.00	ECPP1620
ECP20246	20.00	24.00	6.00	ECPP2024
ECP202412	20.00	24.00	12.00	ECPP2024

Standards

- UL 508A Type 12
- CSA Type 12
- Complies with
  - NEMA Type 12 and 13
  - IEC 60529, IP54

Construction

- Formed from 16 gauge steel.
- Smooth, continuously welded seams ground smooth.
- Door stiffeners are designed to also permit additional mounting options.
- Formed lip on enclosure to exclude flowing liquids and contaminants.
- Reversible rear door is secured with slotted quarter turn fasteners.
- Door frames have zinc die-cast corners with extrusion pressed aluminum profiles.
- Door front panels are 3mm aluminum.
- Oil resistant gaskets are permanently secured.
- Bonding stud provided on door and grounding stud installed in enclosure.
- Quarter turn latches formed from mild steel.
- Formed steel hinge with stainless steel hinge pins.
- Fastening is recommended with optional Tara Plus or 50/80 suspension systems.
- Optional red handle easily mounts horizontally to bottom of enclosure front frame. Order separately.
- Heavy duty re-inforcing plate included.

Finish

- Finished in RAL 7040 gray powder coating.
- Door panel is natural aluminum.

Eclipse Command System Handle

- Easily mounts horizontally to bottom of enclosure front frame.
- Finished in red.

Part No.	Fits Enclosure
ECPH12	ECP12126
ECPH16	ECP12168, ECP161610
ECPH20	ECP1620
ECPH24	ECP202412, ECP20246

Eclipse Command System Inner Panel

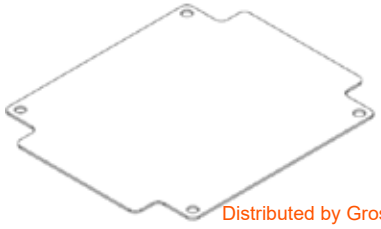

- Panel mounts on the rear door of command enclosures.
- Unfinished aluminum is 0.08" thick.

Part No.	H	W
ECPP1212	10.00	8.25
ECPP1216	10.00	12.25
ECPP1616	14.00	12.25
ECPP1620	14.00	16.25
ECPP2024	18.00	20.25

Distributed by Gross Automation | +1 (262) 252-1600. | hammondsales@grossautomation.com

Technical references and CAD downloads available at www.hammondmfg.com

All dimensions in inches unless specified otherwise

© Hammond Manufacturing

Tara Plus Suspension System *TPSS Series*

NEMA 12, 13

Quick Link: hammfg.com/TPSS

Application

- Taraplus enclosure suspension systems are designed for light and medium loads.
- The strength of tube and cast fittings provide a highly flexible robust system.

Standards

- Complies with
  - IEC 60529 IP54

Construction

- Enclosure coupling and elbow coupling fittings are die-cast from G AL SI 12 aluminum.
- Suspension tubing is steel.

Finish

- Fittings are finished in RAL 7040 window gray.
- Suspension tubing is RAL 7035 light gray.

Tara Plus Suspension Tube

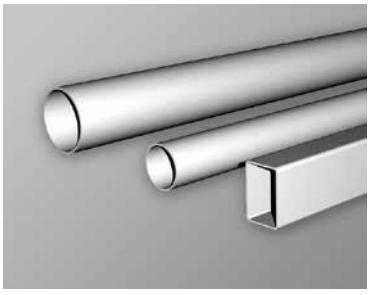

Part No.	Outside mm	Inside mm	Tolerance	Length Metres	Feet
Round Tubes					
R144-301-000	48	42	±0.25	1	3.28
R144-321-000	70	62	±0.25	1	3.28
R144-321-500	70	62	±0.25	1.5	4.92
Rectangular Tubes					
R144-311-000	60 x 40	54 x 34	±0.50	1	3.28
R144-311-500	60 x 40	54 x 34	±0.50	1.5	4.92

Tara Plus Coupling

- Attaches to enclosure.
- Accepts 48mm round tube. perpendicular to enclosure top/ bottom.
- Die-cast Aluminum G Al Si 12.
- Adjustable torque resistance.
- Rotates 300°.

Part No.	Mounting Position
R149-025-500	Top
R149-025-501	Bottom

Tara Plus Tilt Coupling

- Attaches to enclosure.
- Accepts 48mm round tube perpendicular to enclosure top/ bottom.
- Die-cast Aluminum G Al Si 12.
- Rotates 300°.
- Features an adjustable tilt mechanism up to 35°.

Part No.	R149-025-001

Distributed by Gross Automation | +1 (262) 252-1600. | hammondsales@grossautomation.com

Technical references and CAD downloads available at www.hammondmfg.com

All dimensions in inches unless specified otherwise

© Hammond Manufacturing

Tara Plus Elbow Coupling

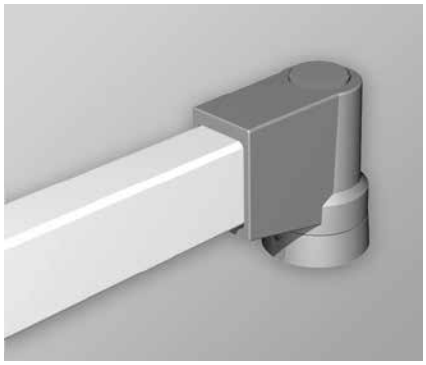

- Attaches to enclosure.
- Accepts 60x40mm rectangular tube parallel to enclosure top/bottom.
- Die-cast Aluminum G Al Si 12.
- Adjustable torque resistance.
- Rotates 300°.
- Accessible from the top.

Part No.	R149-035-000

Tara Plus Tilt Elbow Coupling

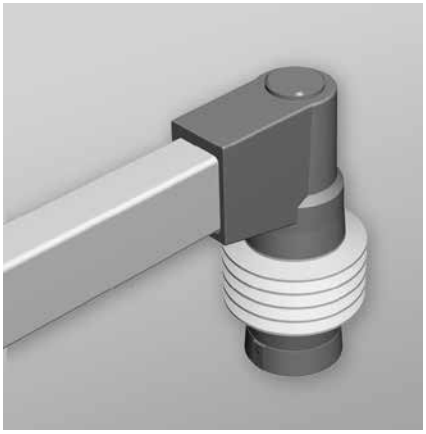

- Attaches to enclosure.
- Accepts 60x40mm rectangular tube parallel to enclosure top/bottom.
- Die-cast Aluminum G Al Si 12.
- Rotates 300°.
- Features an adjustable tilt. mechanism up to 35°.

Part No.	R149-035-001

Tara Plus Fixed Elbow 48

- For use with 48mm round tube and 60x40mm rectangular tube.
- Vertical 48mm tube connection for use with Couplings only (not Base 48).
- Die-cast Aluminum G Al Si 12.
- Large cover opening for easier cable pull through.
- No rotation.
- Accessible from the top.

Part No.	R149-020-000

Tara Plus Fixed Elbow 70

- For use with 70mm round tube and 60x40mm rectangular tube.
- Die-cast Aluminum G Al Si 12.
- No rotation.
- Accessible from the top.

Part No.	R149-020-001

Tara Plus Rotating Elbow

- For use with 70mm round tube and 60x40mm rectangular tube.
- Die-cast Aluminum G Al Si 12.
- Rotates 300°.
- Accessible from the top.

Part No.	R149-040-000

Tara Plus Base 48

- For use with 48mm round tube.
- Not for use with any horizontal configurations.
- Compatible with tube up or tube down configurations.
- Die-cast Aluminum G Al Si 12.
- No rotation.

Part No.	R149-030-000

Distributed by Gross Automation | +1 (262) 252-1600 | hammondsales@grossautomation.com

Technical references and CAD downloads available at www.hammondmfg.com

All dimensions in inches unless specified otherwise

© Hammond Manufacturing

Canada: 519.822.2960 or 905.456.3770 USA: 716.630.7030

Data Subject to change without notice

Tara Plus Base 70

- For use with 70 mm tube.
- Compatible with all vertical and horizontal configurations.
- Compatible with tube up or tube down configurations.
- Die-cast Aluminum G Al Si 12.
- No rotation.

Part No.	R149-030-001

Tara Plus Rotating Base 70

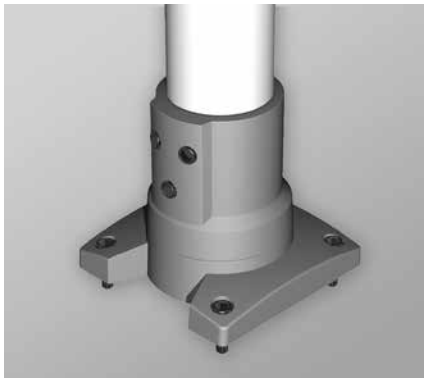

- For use with 70 mm tube.
- Compatible with all vertical and horizontal configurations.
- Compatible with tube up or tube down configurations.
- Die-cast Aluminum G Al Si 12.
- Rotates 300°.
- Integrated movement stop.
- Service free bearings.

Part No.	R149-005-001

Tara Plus Socket Joint

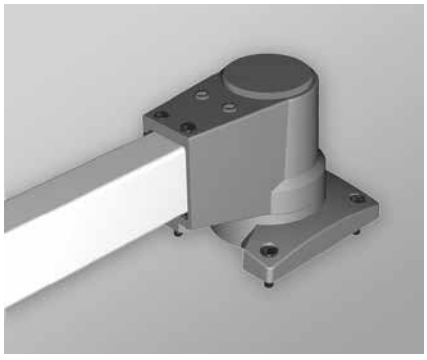

- Accepts 60x40mm rectangular tube parallel to its mounting surface.
- Die-cast Aluminum G Al Si 12.
- Integrated movement stop.
- Service free bearings.
- Rotates 300°.
- Adjustment screws (red screws).
- Accessible from the top.

Part No.	R149-005-000

Tara Plus Wall Joint

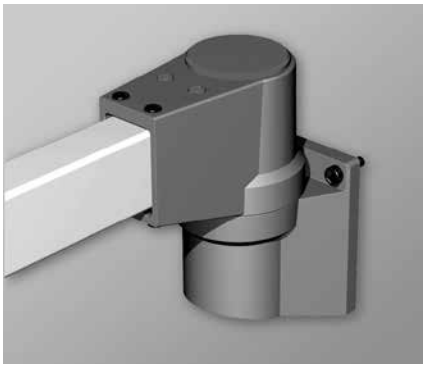

- Accepts 60x40mm rectangular tube perpendicular to its mounting surface.
- Die-cast Aluminum G Al Si 12.
- Rotates 186°.
- Accessible from the top.

Part No.	R149-010-000

Tara Plus Vertical Wall Joint

- Accepts 70mm tube parallel to its mounting surface.
- Die-cast Aluminum G Al Si 12.
- Rotates 316°.

Part No.	R149-010-001

Tara Plus Intermediate Joint

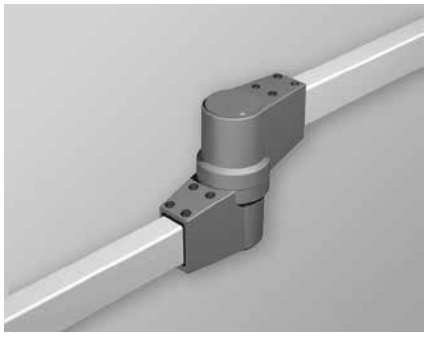

- Accepts 60x40mm rectangular tube.
- Die-cast Aluminum G Al Si 12.
- Integrated movement stop.
- One piece bellow.
- Rotates 300°.

Part No.	R149-015-000

Technical references and CAD downloads available at www.hammondmfg.com

All dimensions in inches unless specified otherwise

Quality Products. Service Excellence.
© Hammond Manufacturing
Canada: 519.822.2960 or 905.456.3770 USA: 716.630.7030
Data Subject to change without notice

Heavy Duty 50/80 mm Suspension Systems *HDSS Series*

NEMA 12, 13

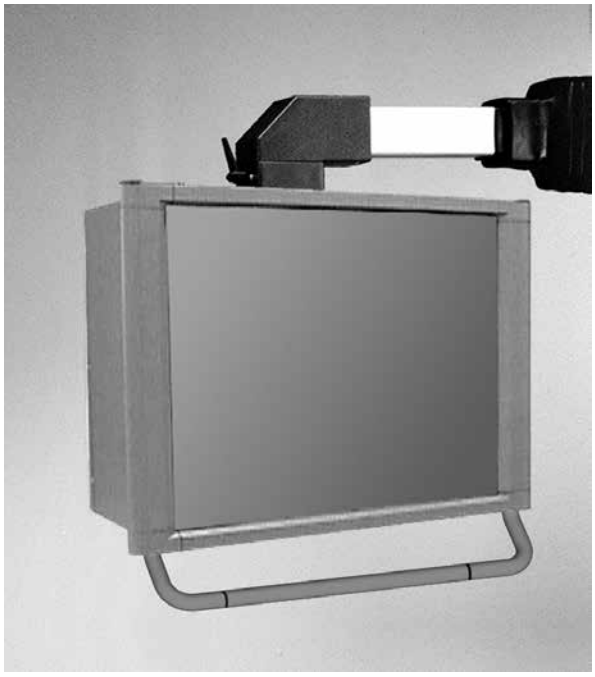

Application

- Command 50mm and 80mm enclosure suspension systems are designed for medium and heavy loads.
- The strength of square tube and cast fittings provide a highly flexible, robust system.

Standards

- Complies with
  - IEC 60529 IP54

Construction

- Enclosure coupling and elbow coupling fittings are die-cast from G Al Si 12 aluminum.
- All other fittings are die-cast 4G-s.g. iron.
- Suspension tubing is steel.

Finish

- Fittings are finished in RAL 7040 window gray powder coating.
- Suspension tubing is RAL 7035 light gray powder coating.

Quick Link: hammfg.com/HDSS

Heavy Duty Suspension Tube

Part No.	Outside mm	Inside mm	Tolerance	Length Metres	Length Feet
R144-021-000R	50	40	±0.5	1	3
R144-022-000R	Square			2	7
R144-041-000R	80	70	±0.6	1	3
R144-042-000R	Square			2	7

Note: Table dimensions in mm.

Heavy Duty Enclosure Coupling

- Cast aluminum.
- Large thrust flange.
- Fastens with 4 hex socket screws.
- Adjustable torque resistance.
- Features a rotation range of 300°.

Part No.	System
R147-025-000R	50
R147-025-200R	80

Note: Table dimensions in mm.

Distributed by Gross Automation | +1 (262) 252-1600. | hammondsales@grossautomation.com

Technical references and CAD downloads available at www.hammondmfg.com

All dimensions in inches unless specified otherwise

© Hammond Manufacturing

Canada: 519.822.2960 or 905.456.3770 USA: 716.630.7030

Data Subject to change without notice

Heavy Duty Elbow Coupling

- Cast Aluminum
- Large thrust flange.
- Fastens with 4 hex socket screws.
- Adjustable torque resistance.
- Features a rotation range of 300°.

Part No.	System
R147-035-000R	50
R147-035-200R	80

Note: Table dimensions in mm.

Heavy Duty Elbow

- Cast Aluminum
- Large cover opening for easier cable pull through.

Part No.	System
R147-020-000R	50
R147-020-200R	80

Note: Table dimensions in mm.

Heavy Duty Intermediate Joint

- 4G-s.g. cast iron.
- Integrated movement stop.
- One piece bellow.
- Two sleeves.
- Features a rotation range of 170°.

Part No.	System
R147-015-000R	50
R147-015-200R	80

Note: Table dimensions in mm.

© Hammond Manufacturing

Heavy Duty Wall Joint

- 4G-s.g. cast iron.
- Integrated movement stop.
- One piece bellow.
- Two sleeves.
- Features a rotation range of 170°.

Part No.	System
R147-010-000R	50
R147-010-200R	80

Note: Table dimensions in mm.

Heavy Duty Socket Joint

- Cast Aluminum.
- Integrated movement stop.
- Service free bearings.
- Features a rotation range of 300°.
- Can mount on top of machine or inverted.

Part No.	System
R147-005-000R	50
R147-005-200R	80

Note: Table dimensions in mm.

Heavy Duty Cast Iron Base

- 4G-s.g. cast iron.
- Gasket included.
- Does not rotate.

Part No.	System
R147-030-000R	50
R147-030-200R	80

Note: Table dimensions in mm.

Heavy Duty Slope Adaptor

- Provides 30° or 60° incline by mounting to rear of enclosure.
- Cast aluminum.

Part No.	R140-045-000R

Distributed by Gross Automation | +1 (262) 252-1600. | hammondsales@grossautomation.com

Technical references and CAD downloads available at www.hammondmfg.com

All dimensions in inches unless specified otherwise

© Hammond Manufacturing

Canada: 519.822.2960 or 905.456.3770 USA: 716.630.7030

Data Subject to change without notice

Type 12 Mild Steel Miniature Pushbutton Enclosures *MPB Series*

Quick Link: hammfg.com/MPB

Application

- Designed to accept 22mm miniature oil tight pushbuttons, switches and pilot lights.
- Provides protection from dirt, dust, oil and water.

Standards

- UL 508A Type 12 and 13
- CSA Type 12 and 13
- Complies with
  - NEMA Type 12 and 13
  - IEC 60529, IP54
- Appropriate components are required to maintain these standards.

Construction

- Formed 14 gauge steel except the MPB1 which is 16 gauge.
- Smooth continuously welded seams.
- Welded brackets provide for enclosure mounting.
- Captive cover screws thread into sealed wells.
- Larger enclosures provide internally hinged removable covers, designed to hold the cover open during wiring (see table).
- Oil resistant gasket and adhesive.
- A bonding stud is provided on the door and a grounding stud is provided on the enclosure.

Finish

- Cover and enclosure are phosphatized and finished in ANSI 61 gray powder coating.

Accessories

- Hole Plugs...*See Page* ***274***
- Pedestal and Base...*See Page* ***303***
- General Accessories...*See Page* ***268***

22.5mm PB Part No.	No. of Holes	Enclosure H	W	D
MPB1[1]	1	3.25	2.75	3.50
MPB2[1]	2	5.13	2.75	3.50
MPB3[1]	3	7.00	2.75	3.50
MPB4[1]	4	8.88	2.75	3.50
MPB6	6	8.50	5.00	4.25
MPB9	9	8.50	6.50	4.25
MPB12	12	10.38	6.50	4.25

[1] Not hinged

Distributed by Gross Automation | +1 (262) 252-1600. | hammondsales@grossautomation.com

Technical references and CAD downloads available at www.hammondmfg.com

All dimensions in inches unless specified otherwise

© Hammond Manufacturing

Type 12 Mild Steel Pushbutton Enclosures *1435 Series*

Quick Link: hammfg.com/1435

Application

- Designed to accept standard heavy duty oil tight pushbuttons, switches and pilot lights.
- Provides protection from dirt, dust, oil and water.

Standards

- UL 508A Type 12 and 13
- CSA Type 12 and 13
- Complies with
  - NEMA Type 12 and 13
  - IEC 60529, IP54
- Appropriate components are required to maintain these standards.

Construction

- Formed 14 gauge steel except
- A and B which are 16 gauge.
- Smooth continuously welded seams.
- Welded brackets provide for enclosure mounting.
- Captive cover screws thread into sealed wells.
- Larger enclosures provide internally hinged removable covers, designed to hold the cover open during wiring (see table).
- Oil resistant gasket and adhesive.
- A bonding stud is provided on the door and a grounding stud is provided on the enclosure.

Finish

- Cover and enclosure are phosphatized and finished in ANSI 61 gray powder coating.

Accessories

- Hole Plugs...*See Page* ***274***
- Pedestal and Base...*See Page* ***303***
- General Accessories...*See Page* ***268***

30.5mm PB Part No.	22.5mm PB Part No.	No. of Holes	Enclosure H	W	D
1435A [1]	1435MA [1]	1	3.50	3.25	2.75
1435B [1]	1435MB [1]	2	5.75	3.25	2.75
1435C [1]	1435MC [1]	3	8.00	3.25	2.75
1435D [1]	1435MD [1]	4	10.25	3.25	2.75
1435F	1435MF	4	7.25	6.25	3.00
1435H	1435MH	6	9.50	6.25	3.00
1435K	1435MK	9	9.50	8.50	3.00
1435O	1435MO	12	11.75	8.50	3.00
1435S	1435MS	16	11.75	10.75	3.00

[1] Not hinged

Distributed by Gross Automation | +1 (262) 252-1600. | hammondsales@grossautomation.com

Technical references and CAD downloads available at www.hammondmfg.com

All dimensions in inches unless specified otherwise

© Hammond Manufacturing

Type 4, 4X Stainless Steel Pushbutton Enclosures *1435SS Series*

Quick Link: hammfg.com/1435SS

Application

- Designed to accept standard heavy duty oil tight pushbuttons, switches and pilot lights.
- Provides protection from dirt, dust, oil and large amounts of water from any angle, or where highly corrosive conditions exist.

Standards

- UL 508A Type 4 and 4X
- CSA Type 4 and 4X
- Complies with
  - NEMA Type 3R, 4 and 4X
  - IEC 60529, IP66
- Appropriate components are required to maintain these standards.

Construction

- Formed 14 gauge stainless steel except A and B which are 16 gauge. 304 or 316 SS.
- Smooth continuously welded seams.
- Welded brackets provide for enclosure mounting.
- Captive stainless steel cover screws thread into sealed wells.
- Larger enclosures provide internally hinged removable covers, designed to hold the cover open during wiring.
- Oil resistant gasket and adhesive.
- A bonding stud is provided on the door and a grounding stud is provided on the enclosure.

Finish

- Natural stainless steel with a smooth brushed finish.

Accessories

- Hole Plugs...*See Page* ***275***
- General Accessories...*See Page* ***268***

304 S.S. 22.5mm PB Part No.	304 S.S. 30.5mm PB Part No.	316 S.S. 22.5mm PB Part No.	316 S.S. 30.5mm PB Part No.	No. Of Holes	Enclosure H	Enclosure W	Enclosure D
1435MSSA [1]	1435SSA [1]	1435MS16A [1]	1435S16A [1]	1	3.50	3.25	2.75
1435MSSB [1]	1435SSB [1]	1435MS16B [1]	1435S16B [1]	2	5.75	3.25	2.75
1435MSSC [1]	1435SSC [1]	1435MS16C [1]	1435S16C [1]	3	8.00	3.25	2.75
1435MSSD [1]	1435SSD [1]	1435MS16D [1]	1435S16D [1]	4	10.25	3.25	2.75
1435MSSH	1435SSH	1435MS16H	1435S16H	6	9.50	6.25	3.00
1435MSSK	1435SSK	1435MS16K	1435S16K	9	9.50	8.50	3.00
1435MSSO	1435SSO	1435MS16O	1435S16O	12	11.75	8.50	3.00

[1] Not hinged

Distributed by Gross Automation | +1 (262) 252-1600. | hammondsales@grossautomation.com

Technical references and CAD downloads available at www.hammondmfg.com

All dimensions in inches unless specified otherwise

© Hammond Manufacturing

Type 12 Mild Steel Pushbutton Enclosures *1437 Series*

Extra Deep

Quick Link: hammfg.com/1437

Application

- Designed to accept standard heavy duty oil tight pushbuttons, switches and pilot lights.
- Provides protection from dirt, dust, oil and water.

Standards

- UL 508A Type 12 and 13
- CSA Enclosure 12 and 13
- Complies with
  - NEMA Type 12 and 13
  - IEC 60529, IP54
- Appropriate components are required to maintain these standards.

Construction

- Formed from 14 gauge steel except A which is 16 gauge.
- Smooth continuously welded seams.
- Welded brackets provide for enclosure mounting.
- Captive cover screws fasten into threaded, sealed wells.
- Larger enclosures provide internally hinged removable covers, designed to hold the cover open during wiring (see drawings).
- Oil resistant gasket and adhesive.
- A bonding stud is provided on the door and a grounding stud is provided on the enclosure.

Finish

- Cover and enclosure are phosphatized and finished in ANSI 61 gray powder coating.

Accessories

- Hole Plugs...*See Page* ***275***
- General Accessories...*See Page* ***268***

30.5mm PB Part No.	22.5mm PB Part No.	No. of Holes	Enclosure H	W	D
1437A [1]	**1437MA** [1]	1	4.00	4.00	4.75
1437B	**1437MB**	2	6.00	4.00	4.75
1437C	**1437MC**	3	8.00	4.00	4.75
1437D	**1437MD**	4	10.00	4.00	4.75
1437F	**1437MF**	4	7.25	6.25	4.75
1437H	**1437MH**	6	9.50	6.25	4.75
1437K	**1437MK**	9	9.50	8.50	4.75
1437O	**1437MO**	12	11.75	8.50	4.75
1437S	**1437MS**	16	11.75	10.75	4.75
1437V	**1437MV**	20	14.00	10.75	4.75
1437X	**1437MX**	25	14.00	13.00	4.75

[1] Not hinged

Distributed by Gross Automation | +1 (262) 252-1600. | hammondsales@grossautomation.com

Technical references and CAD downloads available at www.hammondmfg.com

All dimensions in inches unless specified otherwise

© Hammond Manufacturing

Type 4, 4X Stainless Steel Pushbutton Enclosures *1437SS Series*

Extra Deep

Quick Link: hammfg.com/1437SS

Application

- Designed to accept standard heavy duty oil tight pushbuttons, switches and pilot lights.
- Provides protection from dirt, dust, oil and water.

Standards

- UL 508A Type 4 and 4X
- CSA Enclosure 4 and 4X
- Complies with
  - NEMA Type 4 and 4X
  - IEC 60529, IP66
- Appropriate components are required to maintain these standards.

Construction

- Formed from 14 gauge steel except A which is 16 gauge.
- Smooth continuously welded seams.
- Welded brackets provide for enclosure mounting.
- Captive cover screws fasten into threaded, sealed wells.
- Larger enclosures provide internally hinged removable covers, designed to hold the cover open during wiring (see drawings).
- Oil resistant gasket and adhesive.
- A bonding stud is provided on the door and a grounding stud is provided on the enclosure.

Finish

- Natural stainless steel with a smooth brushed finish.

Accessories

- Hole Plugs...*See Page* ***274***
- Ground Wire Kits...*See Page* ***272***

304 S.S. 22.5mm PB Part No.	304 S.S. 30.5mm PB Part No.	316 S.S. 22.5mm PB Part No.	316 S.S. 30.5mm PB Part No.	No. Of Holes	Enclosure H	Enclosure W	Enclosure D
1437MSSA [1]	1437SSA [1]	1437MS16A [1]	1437S16A [1]	1	4.00	4.00	4.75
1437MSSB	1437SSB	1437MS16B	1437S16B	2	6.00	4.00	4.75
1437MSSC	1437SSC	1437MS16C	1437S16C	3	8.00	4.00	4.75
1437MSSD	1437SSD	1437MS16D	1437S16D	4	10.00	4.00	4.75
-	1437SSS	-	1437S16S	16	11.75	10.75	4.75

[1] Not hinged

Distributed by Gross Automation | +1 (262) 252-1600. | hammondsales@grossautomation.com

Technical references and CAD downloads available at www.hammondmfg.com

All dimensions in inches unless specified otherwise

© Hammond Manufacturing

Type 12 Mild Steel Pushbutton Enclosures *1489 Series*

Hinged Cover

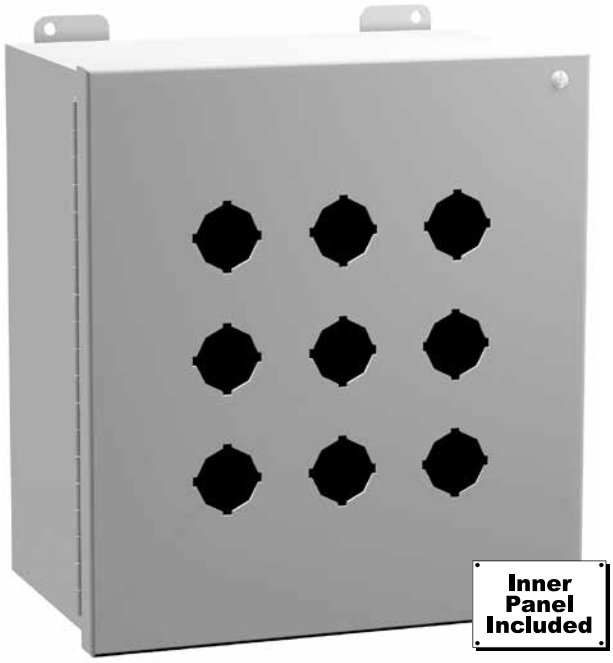

Quick Link: hammfg.com/1489

Application

- Designed to accept standard heavy duty oil tight pushbuttons, switches and pilot lights.
- Provides protection from dirt, dust, oil and water.

Standards

- UL 508A Type 12
- CSA Type 12
- Complies with
  - NEMA Type 12
  - IEC 60529, IP54
- Appropriate components are required to maintain these standards.

Construction

- Formed 14 gauge steel.
- Smooth continuously welded seams.
- Welded brackets provide for enclosure mounting.
- Continuously hinged cover is secured with captive, plated steel screws which fasten into threaded sealed wells.
- Oil resistant gasket and adhesive.
- Weldnuts are provided for mounting inner panels.
- A removable 14 gauge inner panel is included.
- A bonding stud is provided on the door and a grounding stud is provided in the enclosure.

Finish

- Cover and enclosure are phosphatized and finished in ANSI 61 gray powder coating.
- Removable inner panel is finished in white powder coating.

Accessories

- Hole Plugs...*See Page* ***274***
- Pedestal and Base...*See Page* ***303***
- General Accessories...*See Page* ***268***

30.5mm PB Part No.	22.5mm PB Part No.	No. Of Holes	Enclosure H	Enclosure W	Enclosure D	Panel H	Panel W
1489P4	**1489MP4**	4	8.25	7.25	6.00	6.25	5.25
1489P6	**1489MP6**	6	10.50	7.25	6.00	8.50	5.25
1489P9	**1489MP9**	9	10.50	9.50	6.00	8.50	7.50
1489P12	**1489MP12**	12	12.75	9.50	6.00	10.75	7.50
1489P16	**1489MP16**	16	12.75	11.75	6.00	10.75	9.75
1489P20	**1489MP20**	20	15.00	11.75	6.00	13.00	9.75
1489P25	**1489MP25**	25	15.00	14.00	6.00	13.00	12.00
1489P30	**1489MP30**	30	17.25	14.00	6.00	15.25	12.00
1489P36	**1489MP36**	36	17.25	16.25	6.00	15.25	14.25
1489P42	**1489MP42**	42	19.50	16.25	6.00	17.50	14.25

Distributed by Gross Automation | +1 (262) 252-1600. | hammondsales@grossautomation.com

Technical references and CAD downloads available at www.hammondmfg.com

All dimensions in inches unless specified otherwise

© Hammond Manufacturing

Type 12 Mild Steel Pushbutton Enclosures *1490 Series*

Sloped Consolet

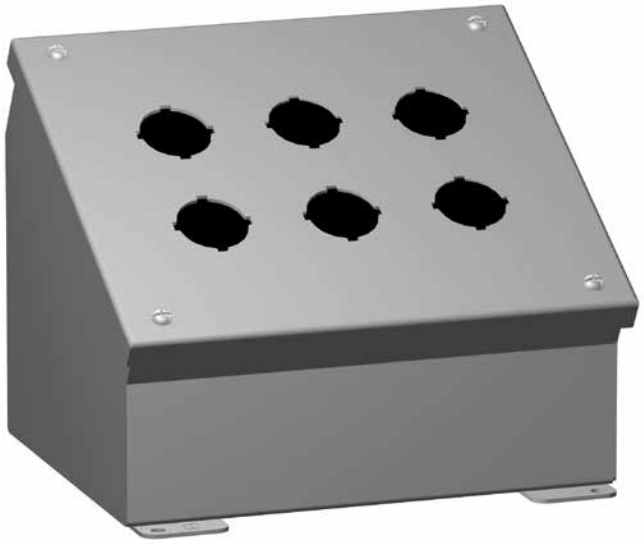

Quick Link: hammfg.com/1490

Application

- Designed to accept standard heavy duty oil tight pushbuttons, switches and pilot lights.
- Ideal for wall or surface mounting to provide the necessary control slope.
- Provides protection from dirt, dust, oil and water.

Standards

- UL 508A Type 12 and 13
- CSA Type 12 and 13
- Complies with
  - NEMA Type 12 and 13
  - IEC 60529, IP54
- Appropriate components are required to maintain these standards.

Construction

- Formed 14 gauge steel.
- Smooth continuously welded seams.
- Construction provides either a 30° or 60° slope on front cover depending on mounting position.
- Welded brackets provide for enclosure mounting.
- Captive cover screws thread into sealed wells.
- Larger enclosures provide internally hinged removable covers designed to hold the cover open during wiring (as noted in table).
- Oil resistant gasket and adhesive.
- A bonding stud is provided on the door and a grounding stud is provided on the enclosure.

Finish

- Cover and enclosure are phosphatized and finished in ANSI 61 gray powder coating.

Accessories

- Hole Plugs...*See Page* ***274***
- Pedestal and Base...*See Page* ***303***
- General Accessories...*See Page* ***268***

30.5mm PB Part No.	22.5mm PB Part No.	No. Of Holes	Enclosure H	W	D
1490D1[1]	**1490MD1**[1]	1	3.50	3.25	4.88
1490D2[1]	**1490MD2**[1]	2	3.50	5.50	4.88
1490D3[1]	**1490MD3**[1]	3	3.50	7.75	4.88
1490D4[1]	**1490MD4**[1]	4	3.50	10.00	4.88
1490G4	**1490MG4**	4	7.25	6.25	6.75
1490G6	**1490MG6**	6	7.25	8.50	6.75
1490G8	**1490MG8**	8	7.25	10.75	6.75
1490H9	**1490MH9**	9	9.50	8.50	7.88
1490G10	**1490MG10**	10	7.25	13.00	6.75
1490G12	**1490MG12**	12	7.25	15.25	6.75
1490J12	**1490MJ12**	12	11.75	8.50	9.00
1490G16	**1490MG16**	16	7.25	19.75	6.75
1490J16	**1490MJ16**	16	11.75	10.75	9.00
1490J20	**1490MJ20**	20	11.75	13.00	9.00
1490K25	**1490MK25**	25	14.00	13.00	10.13
1490K30	**1490MK30**	30	14.00	15.25	10.13

[1] Not hinged

Distributed by Gross Automation | +1 (262) 252-1630 | hammondsales@grossautomation.com

Technical references and CAD downloads available at www.hammondmfg.com

All dimensions in inches unless specified otherwise

© Hammond Manufacturing

Type 4, 4X Polycarbonate Pushbutton Enclosure *1554 PB Series*

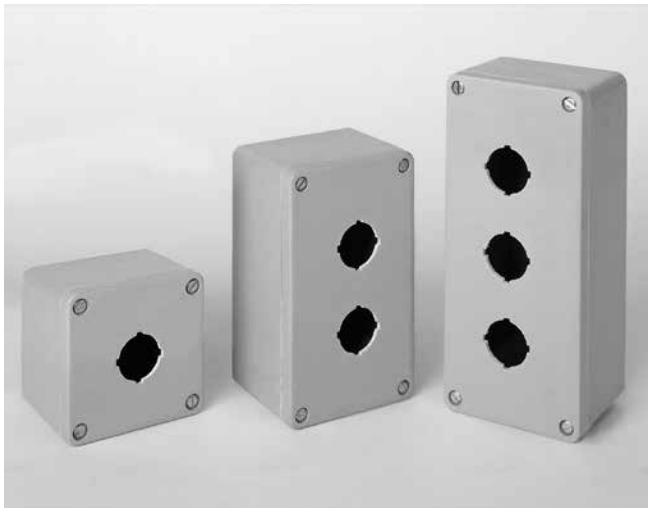

Quick Link: hammfg.com/1554PB

Standards

- IP66
- NEMA 4, 4X, 6, 6P, 12 & 13
- UL94 5V

Construction

- Electronic instrument enclosures, designed for mounting printed circuit boards or DIN rail mounted components.
- The polycarbonate material carries a UL flammability rating of UL94 5V and is suitable for outdoor use.
- Lid and mounting holes are located outside of the gasket seal.
- Lid is secured with self captivating M4 stainless steel machine screws (included), threaded into integral stainless steel bushings (for repetitive assembly & disassembly).
- Heavy duty 16 gauge galvanized steel panels available (see chart)
- All stainless steel hardware to avoid corrosion caused by dissimilar metals.
- Gasket is a preformed, high temperature U.L. listed silicone rubber. Gasket is replaceable.
- Gasketed lid with two piece “tongue & groove” construction provides protection against access of oil, dust and water.
- Internal DIN rail mounting tabs.
- Threaded (M3) integral brass inserts & standoffs designed for M3.5 or #6 self tapping screws for P.C. board or inner panel mounting in all but the smallest size.
- Vertical P.C. card guides (for 1.5 mm thick P.C. boards) are molded in all but the smallest size

Finish

- Color is light gray (RAL 7035)

Accessories

- Optional Inner Panel
  - Heavy duty panels for mounting components
  - Galvanized 16 ga. steel.
  - Includes mounting hardware.
- Optional Mounting Feet
  - Part No. 1554FT

22 mm Hole Part No.	30.5 mm Hole Part No.	# of Holes	Enclosure H	Enclosure W	Enclosure D (w/lid)	Optional Inner Panel Part No.	Optional Inner Panel H	Optional Inner Panel W
1554MPB1	1554PB1	1	3.54	3.54	2.36	1554EPL	3.10	3.10
1554MPB1A	1554PB1A	1	3.54	3.54	3.54	1554EPL	3.10	3.10
1554MPB2	1554PB2	2	6.30	3.54	2.38	1554JPL	5.80	3.00
1554MPB2D	1554PB2D	2	6.30	3.54	3.56	1554JPL	5.80	3.00
1554MPB3	1554PB3	3	7.87	4.72	3.56	1554UPL	7.60	4.20
1554MPB4	1554PB4	4	7.87	4.72	3.56	1554UPL	7.60	4.20
1554MPB6	1554PB6	6	9.45	6.30	3.54	1554VPL	9.10	5.70
1554MPB6A	1554PB6A	6	9.45	6.30	3.54	1554VAPL	8.93	5.73
1554MPB6B	1554PB6B	6	9.45	6.30	4.72	1554VAPL	8.93	5.73

Distributed by Gross Automation | +1 (262) 252-1600. | hammondsales@grossautomation.com

Technical references and CAD downloads available at www.hammondmfg.com

All dimensions in inches unless specified otherwise

© Hammond Manufacturing

Type 4, 4X Polyester Pushbutton Enclosure *PJPB Series*

Quick Link: hammfg.com/PJPB

Application

- Designed for use as pushbutton enclosures for 22.5mm or 30.5mm devices.
- Provides outstanding insulation and protection where equipment may be hosed down or be very wet.
- Ideal in applications with high temperatures or highly corrosive environments.

Standards

- UL 508A Type 1, 2, 3, 4, 4X, 12 and 13
- CSA Type 1, 2, 3, 4, 4X, 12 and 13
- Complies with
  - NEMA Type 1, 2, 3, 4, 4X, 12 and 13
  - IEC 60529, IP66

Construction

- Molded fiberglass polyester enclosure with matching cover is easily punched, cut, or drilled.
- Threaded brass inserts are provided for optional inner panel.
- Cover is fastened with captive stainless steel screws in threaded brass inserts.
- Captive oil resistant gasket provides a positive seal.
- Mounting through rear holes on enclosure. Use #8 x 1 inch screw (not included).
- Enhanced UV inhibitors protect against outdoor weathering.
- Operating temperatures between 130°C and -40°C (266°F to -40°F).
- Impact index of 6.78J (5 ft/lb).
- For corrosion resistance information, please refer to table in Technical Information.

Finish

- Fiberglass polyester material has a gray finish.
- Optional aluminum inner panel natural finish.

Accessories

- Hole Plugs...*See Page* ***275***

30.5mm PB Part No.	22.5mm PB Part No.	# of Holes	Enclosure H	W	D
PJ744P1	**PJ744P221**	1	6.74	3.93	3.88
PJ744P2	**PJ744P222**	2	6.74	3.93	3.88
PJ944P3	**PJ944P223**	3	8.99	3.93	3.88

Distributed by Gross Automation | +1 (262) 252-1600. | hammondsales@grossautomation.com

Technical references and CAD downloads available at www.hammondmfg.com

All dimensions in inches unless specified otherwise

Quality Products. Service Excellence.
© Hammond Manufacturing
Canada: 519.822.2960 or 905.456.3770 USA: 716.630.7030
Data Subject to change without notice

Type 4, 4X Polyester Pushbutton Enclosure *PJPBLC Series*

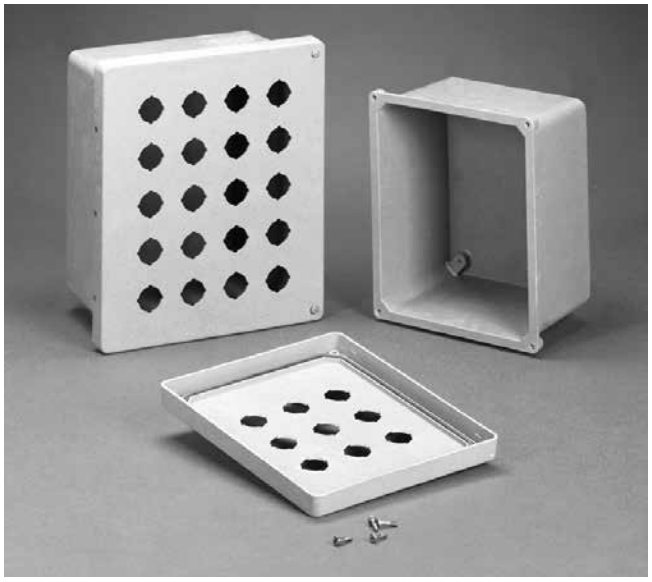

Quick Link: hammfg.com/PJPBLC

Application

- Designed for use as pushbutton enclosures for 30.5mm devices.
- Provides outstanding insulation and protection where equipment may be hosed down or be very wet.
- Ideal in applications with high temperatures or highly corrosive environments.

Standards

- UL 508A Type 1, 2, 3, 4, 4X, 12 and 13
- CSA Type 1, 2, 3, 4, 4X, 12 and 13
- Complies with
  - NEMA Type 1, 2, 3, 4, 4X, 12 and 13
  - IEC 60529, IP66

Construction

- Molded fiberglass polyester enclosure with matching cover is easily punched, cut, or drilled.
- Standard JIC sizes under 18" x 16".
- Threaded brass inserts are provided for optional inner panel or terminal kit mounting.
- Cover is fastened with captive stainless steel screws in threaded brass inserts.
- Captive oil resistant gasket provides a positive seal.
- Threaded brass inserts are provided for mounting feet to the rear of the enclosure.
- Stainless steel mounting brackets and hardware are provided for mounting to the rear of the enclosure.
- Enhanced UV inhibitors protect against outdoor weathering.
- Operating temperatures between 130°C and -40°C (266°F to -40°F).
- Impact index of 6.78J (5 ft/lb).
- For corrosion resistance information, please refer to table in Technical Information.

Finish

- Fiberglass polyester material has a gray finish.
- Optional inner panels are available in white powder coated finished steel or unfinished aluminum.

Accessories

- Additional Inner Panels...*See Page* ***280***
- Terminal Kit Assemblies...*See Page* ***288***
- Stainless Replacement Mounting Feet...*See Page* ***278***
- Hole Plugs...*See Page* ***275***

Lift Off Cover	Hinged Cover	No.	Enclosure			Optional Inner Panel		
30.5mm PB Part No.	30.5mm PB Part No.	Holes	H	W	D	Part No.	H	W
PJ664P4	**PJ664HP4**	4	6.10	6.10	4.18	**14R0505**	4.88	4.88
PJ864P6	**PJ864HP6**	6	8.00	6.12	4.13	**14R0705**	6.75	4.88
PJ1084P9	**PJ1084HP9**	9	10.13	8.26	4.13	**14R0907**	8.75	6.88
PJ1086P9	**PJ1086HP9**	9	10.13	8.26	6.13	**14R0907**	8.75	6.88
PJ1086P12	**PJ1086HP12**	12	10.13	8.26	6.13	**14R0907**	8.75	6.88
PJ12106P16	**PJ12106HP16**	16	12.13	10.26	6.13	**14R1109**	10.75	8.88
PJ12106P20	**PJ12106HP20**	20	12.13	10.26	6.13	**14R1109**	10.75	8.88
PJ14126P25	**PJ14126HP25**	25	14.13	12.26	6.13	**14R1311**	12.75	10.88
PJ16148P30	**PJ16148HP30**	30	16.27	14.40	8.13	**14R1513**	14.75	12.88
PJ18168P42	**PJ18168HP42**	42	18.40	16.40	8.13	**P1868**	16.88	14.88

Alternative inner panel options available.

Distributed by Gross Automation | +1 (262) 252-1600. | hammondsales@grossautomation.com

Technical references and CAD downloads available at www.hammondmfg.com

All dimensions in inches unless specified otherwise

© Hammond Manufacturing

Canada: 519.822.2960 or 905.456.3770 USA: 716.630.7030

Data Subject to change without notice

© Hammond Manufacturing

Wireway & Trough

Type 12 Lay-In Wireway
1485 Series
Wireway & Accessories 184

Type 12 Pull Through Wireway
1487 Series
Wireway & Accessories 189

Type 4X Pull Through Wireway
1487SS Series
Wireway & Accessories 193

Type 12 Wiring Trough
1486 Series 196

Type 1 Lay-In Wireway
CW Series
Wireway & Accessories 197

Type 3R Wiring Trough
C3RWT Series..... 201

© Hammond Manufacturing

Type 12 Lay-In Wireway *1485 Series*

Wireway & Accessories

Quick Link: hammfg.com/1485

Application

- Designed to enclose and protect electrical wiring from dirt, dust, oil and water.
- All sections and fittings are completely open on each side to allow wires and cables to be placed into the wireway without “pulling through”.

Standards

- UL 870 Type 1 (unless marked1)
- CSA Type 1 (unless marked1)
- Complies with
  - NEMA Type 12
  - IEC 60529, IP54

Construction

- Bodies and covers are formed from 14-gauge steel with 10 gauge steel flanges.
- Flanges are open at the top to allow cables to lay in when doors open.
- 12” x 6” size has a 12 gauge steel body with a 14-gauge cover.
- Smooth continuously welded seams.
- Interior surfaces are smooth to prevent wire damage during installation.
- Butt hinged cover is secured with easily operated quick release clamps.
- Oil resistant gaskets are permanently secured.
- Solid oil resistant gaskets are used between flanges when sections and fittings are bolted together.
- One gasket kit, complete with hardware is provided with each straight section or fitting.
- Sealing plate is supplied.
- Flange junctions are sealed with gasket sealing plates, which are put in place after wiring is completed. One is supplied with all straight sections and most fittings; see table for exact number.

Finish

- Sections and components are finished in ANSI 61 gray powder coating.

Notes

- When joining a wireway section or fitting to an enclosure be sure to order a box connector.
- When joining two wireway sections, or joining a wireway section to a fitting, a flat sealing plate is required at each junction; necessary kits are supplied with each section and fitting. See table, extra kits may be ordered if necessary.
- When joining a lay-in wireway section or fitting to a closure plate, a box connector, or cut-off fitting, an angle sealing plate is required at each junction.
- Necessary kits are supplied with each section and fitting - see table. Extra kits, although not normally required, are necessary when joining lay-in wireway to a non-lay-in section or fitting section.

Description	Sealing Plates Supplied	2.5 x 2.5 Part No.	4 x 4 Part No.	6 x 6 Part No.	8 x 8 Part No.	12 x 6 Part No.
6” Section	1 Flat	**1485B6**	**1485C6**	**1485D6**	**1485E6**	**1485F6**
12” Section	1 Flat	**1485B12**	**1485C12**	**1485D12**	**1485E12**	**1485F12**
24” Section	1 Flat	**1485B24**	**1485C24**	**1485D24**	**1485E24**	**1485F24**
36” Section	1 Flat	**1485B36**	**1485C36**	**1485D36**	**1485E36**	**1485F36**
48” Section	1 Flat	**1485B48**	**1485C48**	**1485D48**	**1485E48**	**1485F48**
60” Section	1 Flat	**1485B60**	**1485C60**	**1485D60**	**1485E60**	**1485F60**
120” Section	1 Flat	**1485B120**	**1485C120**	**1485D120**	**1485E120**	**1485F120**

[1] Does not meet CSA or UL requirement
[2] Maintains ratings on CSA and UL approved wireway

Distributed by Gross Automation | +1 (262) 252-1600. | hammondsales@grossautomation.com

Technical references and CAD downloads available at www.hammondmfg.com

All dimensions in inches unless specified otherwise

Quality Products. Service Excellence.
© Hammond Manufacturing
Canada: 519.822.2960 or 905.456.3770 USA: 716.630.7030
Data Subject to change without notice

Description	Sealing Plates Supplied	2.5 x 2.5 Part No.	4 x 4 Part No.	6 x 6 Part No.	8 x 8 Part No.	12 x 6 Part No.
60" Long Partition (Barrier)	-	-	1487CB60[1]	1487DB60[1]	1487EB60[1]	1487DB60[1]
1" Nipple	1 Flat	1485BM1	1485CM1	1485DM1	-	-
2" Nipple	1 Flat	1485BM2	1485CM2	1485DM2	-	-
3" Nipple	1 Flat	1485BM3	1485CM3	1485DM3	-	-
Box Entry Swivel Nipple	1 Angle	1485BV1	1485CV1	1485DV1	1485EV1	-
Standard Swivel Nipple	2 Angle	1485BV2	1485CV2	1485DV2	1485EV2	-
12" Transposition Clockwise	1 Flat	1485BZ12	1485CZ12	1485DZ12	1485EZ12	-
12" Transposition Counter-Clockwise	1 Flat	1485BZC12	1485CZC12	1485DZC12	1485EZC12	-
Flexible Fitting	None	1485BFF	1485CFF	1485DFF	1485EFF	-
Adjustable Fitting	1 Spec.	1485BX [1]	1485CX [1]	1485DX [1]	1485EX [1]	1485FX [1]
Cut-Off Fitting Lay-In	1 Flat	1485BW1[1]	1485CW1[1]	1485DW1[1]	1485EW1[1]	1485FW1[1]
Cut-Off Fitting Non Lay-In	1 Angle	1485BW2[1]	1485CW2[1]	1485DW2[1]	1485EW2[1]	1485FW2[1]
90° Elbow, Top Opening	1 Flat	1485B9N	1485C9N	1485D9N	1485E9N	1485F9N
90° Elbow, Inside Opening	1 Flat	1485B9P	1485C9P	1485D9P	1485E9P	1485F9P
90° Elbow, Outside Opening	1 Flat	1485B9Q	1485C9Q	1485D9Q	1485E9Q	1485F9Q
45° Elbow, Top Opening	1 Flat	1485B4N	1485C4N	1485D4N	1485E4N	1485F4N
45° Elbow, Inside Opening	1 Flat	1485B4P	1485C4P	1485D4P	1485E4P	-
45° Elbow, Outside Opening	1 Flat	1485B4Q	1485C4Q	1485D4Q	1485E4Q	-
Tee Fitting, Top Opening	2 Flat	1485BTN	1485CTN	1485DTN	1485ETN	1485FTN
Tee Fitting, Outside & Top Opening	2 Flat	1485BTQ	1485CTQ	1485DTQ	1485ETQ	-
Cross Fitting	3 Flat	1485BY	1485CY	1485DY	1485EY	1485FY
Reducer 4 x 4 to 2.5 x 2.5	None	-	1485CRE	-	-	-
Reducer 6 x 6 to 4 x 4	None	-	-	1485DRE	-	-
Reducer 8 x 8 to 6 x 6	None	-	-	-	1485ERE	-
Reducer 12 x 6 to 4 x 4	None	-	-	-	-	1485FREC
Reducer 12 x 6 to 6 x 6	None	-	-	-	-	1485FRED
Junction Box	1 Flat	1485BJ	1485CJ	1485DJ	1485EJ	-
Box Connector	1 Angle	1485BK [1]	1485CK [1]	1485DK [1]	1485EK [1]	1485FK [1]
Drop Hanger	None	1485BL1[1]	1485CL1[1]	1485DL1[1]	1485EL1[1]	-
Bracket Hanger	None	1485BL2[1]	1485CL2[1]	1485DL2[1]	1485EL2[1]	-
Cover Plate	1 Angle	1485BH [2]	1485CH [2]	1485DH [2]	1485EH [2]	1485FH [2]
Snap On Flat Sealing Plate	None	1485BSM [2]	1485CSM [2]	1485DSM [2]	1485ESM [2]	1485FSM [2]
Angle Sealing Plate	None	1485BS9[2]	1485CS9[2]	1485DS9[2]	1485ES9[2]	1485FS9[2]

[1] Does not meet CSA or UL requirement
[2] Maintains ratings on CSA and UL approved wireway

Typical Straight Section

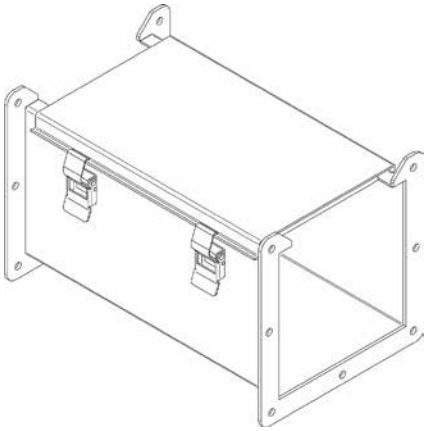

Flat Sealing Plate

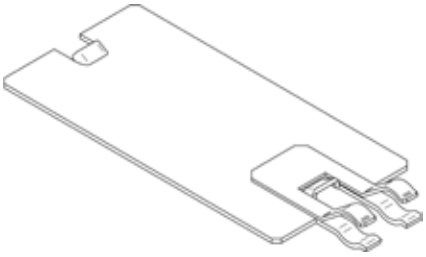

Angle Sealing Plate

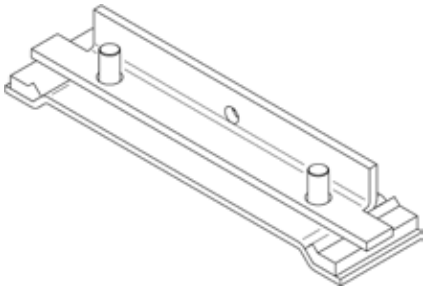

© Hammond Manufacturing

Barrier Kit

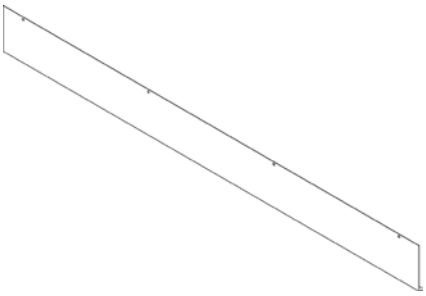

Swivel Nipple

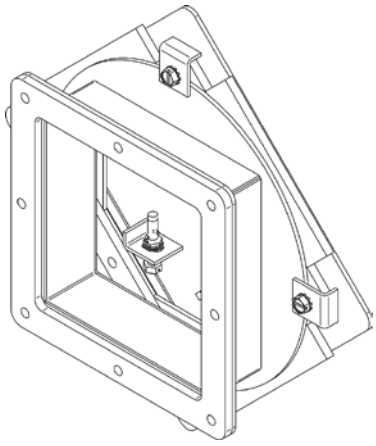

45 degree Elbow Top Opening

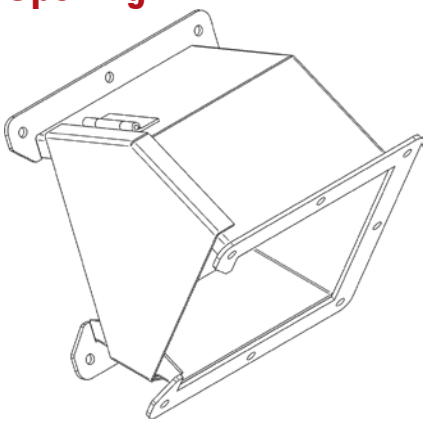

Adjustable Fitting

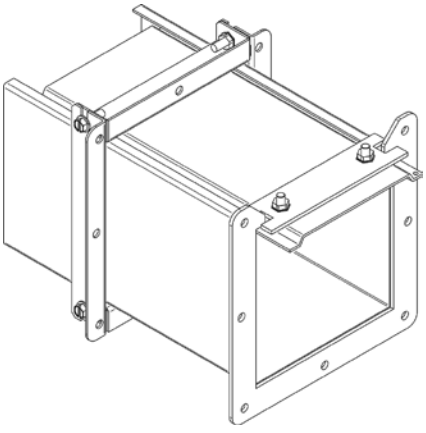

- Allows on site length adjustment of 2” to 7”

Cross Fitting

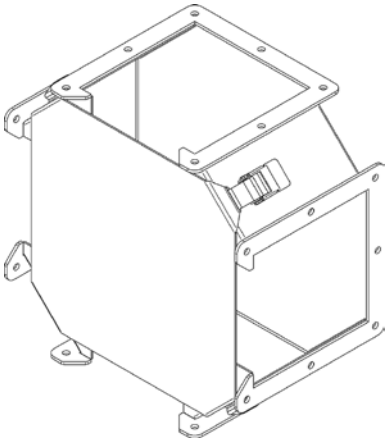

45 degree Elbow Inside Opening

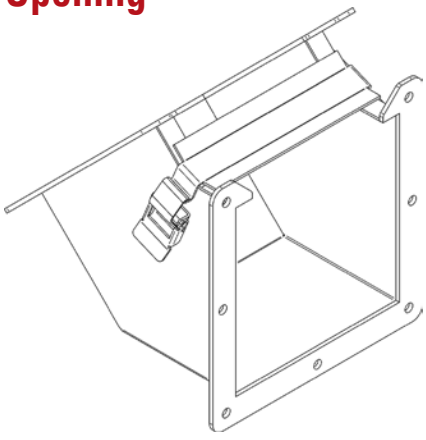

45 degree Elbow Outside Opening

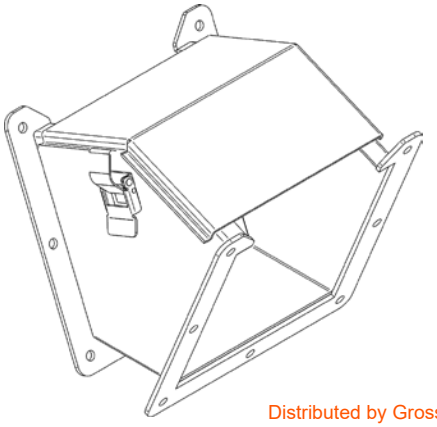

90 degree Elbow Top Opening

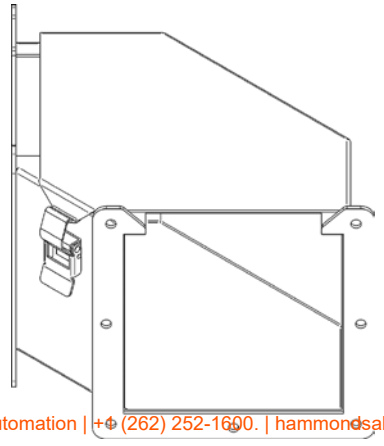

90 degree Elbow Inside Opening

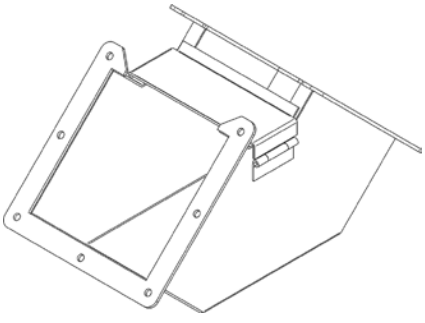

Distributed by Gross Automation | +1 (262) 252-1600. | hammondsales@grossautomation.com

Technical references and CAD downloads available at www.hammondmfg.com

All dimensions in inches unless specified otherwise

© Hammond Manufacturing

Flexible Fitting

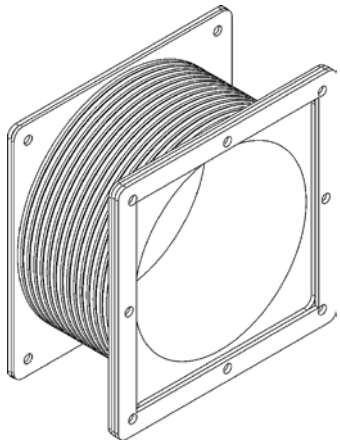

- Allows for easy alignment of sections or fittings
- Metal flanges
- Flexible synthetic “bellows” middle section

Cut-Off Fitting (Lay-In)

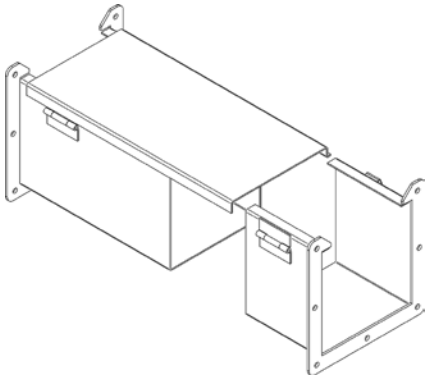

- Body comes in two pieces. Cut-off one piece, shorten cover, and weld together.
- Includes angle sealing plate.

Cut-Off Fitting (Non Lay-In)

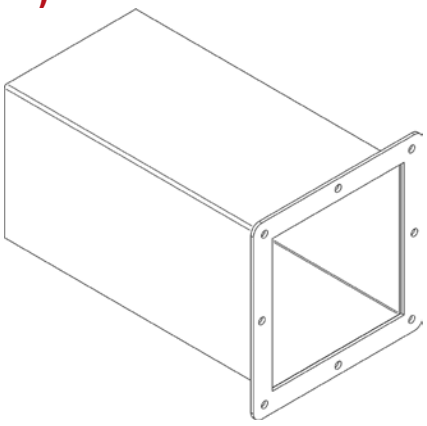

- For lengths up to 12”. Cut off body and weld on flange.

Nipple

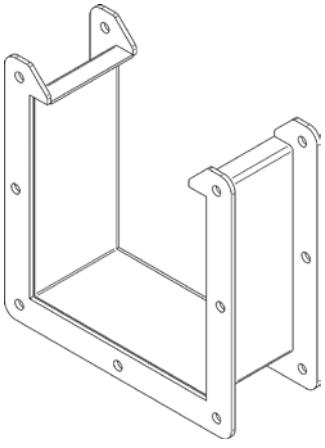

- Lay-in nipples come with a special sealing plate which cannot be used adjacent to swivel nipples (use 1487 Series nipples)

Box Connector

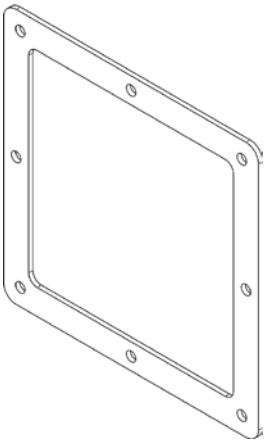

- Use inside box when entering with “Lay-In” Wireway.

12” Transposition Sections Clockwise &

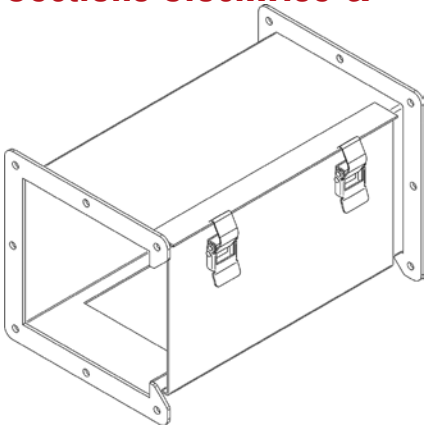

- Used to rotate the open side of a wireway run by 90° and maintain the lay-in feature

© Hammond Manufacturing

90 degree Elbow Outside Opening

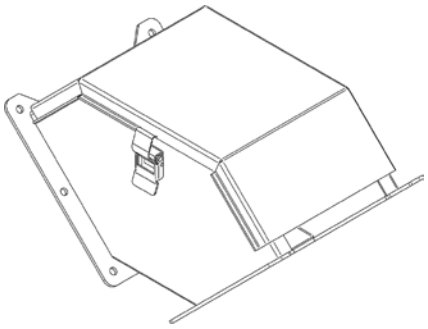

Tee Fitting Top Opening

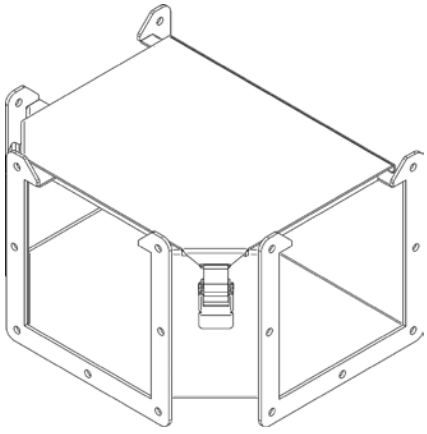

Tee Fitting Outside and Top Opening

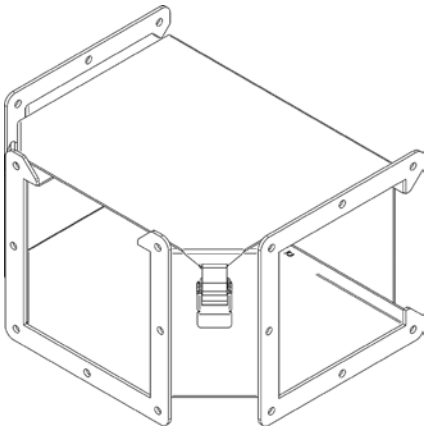

Reducers

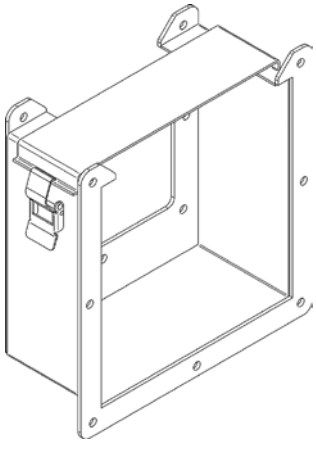

Drop Hanger

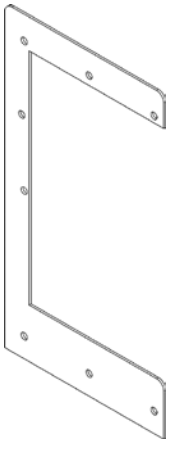

Bracket Hanger

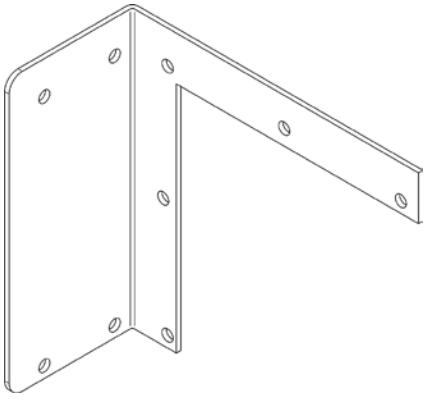

Cover Plate

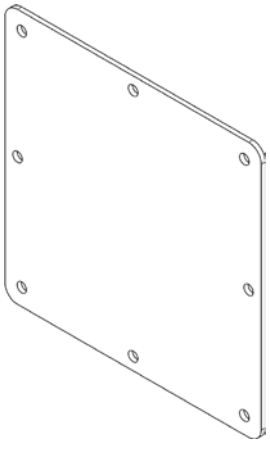

Junction Box

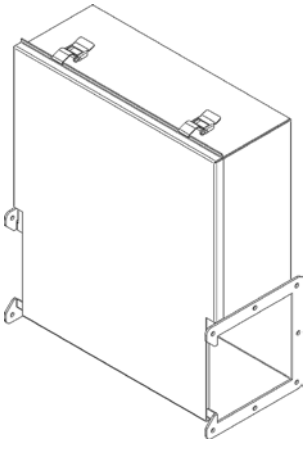

- Includes inner panel

Part No.	For use with	Enclosure H	Enclosure W	Inner Panel H	Inner Panel W
1485BJ	2.5 x 2.5	12.00	10.25	8.75	6.87
1485CJ	4 x 4	14.00	13.87	10.75	8.87
1485DJ	6 x 6	16.00	17.87	12.75	10.87
1485EJ	8 x 8	18.00	21.87	14.75	12.87

One flat sealing plate included

Distributed by Gross Automation | +1 (262) 252-1600. | hammondsales@grossautomation.com

Technical references and CAD downloads available at www.hammondmfg.com

All dimensions in inches unless specified otherwise

Quality Products. Service Excellence.
© Hammond Manufacturing
Canada: 519.822.2960 or 905.456.3770 USA: 716.630.7030
Data Subject to change without notice

Type 12 Pull Through Wireway *1487 Series*

Wireway & Accessories

Quick Link: hammfg.com/1487

Application

- Designed to enclose and protect electrical wiring from dirt, dust, oil and water.
- Ideal for connecting machines to control panels or power sources.

Standards

- UL 870 Type 1 (unless marked[1])
- CSA Type 1 (unless marked[1])
- Complies with
  - NEMA Type 12
  - IEC 60529, IP54

Construction

- Bodies and covers are formed from 14 gauge steel with 10 gauge steel flanges.
- Continuous flange around wireway ends, requires cables to be pulled through. (For lay-in style, see 1485 Series.)
- Smooth continuously welded seams.
- Interior surfaces are smooth to prevent wire damage during installation.
- Butt hinged covers are secured with easily operated screw clamps.
- Oil resistant gaskets are permanently secured.
- Solid oil resistant gaskets are used between flanges when sections and fittings are bolted together.
- One gasket kit, complete with hardware is provided with each straight section or fitting.

Finish

- Sections and fittings are finished in ANSI 61 gray.

Description	2.5 x 2.5 Part No.	4 x 4 Part No.	6 x 6 Part No.	8 x 8 Part No.
12” Section	**1487B12**	**1487C12**	**1487D12**	**1487E12**
24” Section	**1487B24**	**1487C24**	**1487D24**	**1487E24**
36” Section	**1487B36**	**1487C36**	**1487D36**	**1487E36**
48” Section	**1487B48**	**1487C48**	**1487D48**	**1487E48**
60” Section	**1487B60**	**1487C60**	**1487D60**	**1487E60**
120” Section	**1487B120**	**1487C120**	**1487D120**	**1487E120**
60” Long Partition (Barrier)	-	**1487CB60**[1]	**1487DB60**[1]	**1487EB60**[1]
1” Nipple	**1487BM1**	**1487CM1**	**1487DM1**	**1487EM1**
2” Nipple	**1487BM2**	**1487CM2**	**1487DM2**	**1487EM2**
3” Nipple	**1487BM3**	**1487CM3**	**1487DM3**	**1487EM3**
6” Nipple	**1487BM6**	**1487CM6**	**1487DM6**	**1487EM6**
Box Entry Swivel Nipple	**1487BV1**	**1487CV1**	**1487DV1**	**1487EV1**
Standard Swivel Nipple	**1487BV2**	**1487CV2**	**1487DV2**	**1487EV2**
Flexible Fitting	**1485BFF** [1]	**1485CFF** [1]	**1485DFF** [1]	**1485EFF** [1]
Adjustable Fitting	**1487BX** [1]	**1487CX** [1]	**1487DX** [1]	**1487EX** [1]
Cut-Off Fitting	**1487BW** [1]	**1487CW** [1]	**1487DW** [1]	**1487EW** [1]
90° Elbow	**1487B9P**	**1487C9P**	**1487D9P**	**1487E9P**
45° Elbow	**1487B4P**	**1487C4P**	**1487D4P**	**1487E4P**
22.5° Elbow	**1487B2P**	**1487C2P**	**1487D2P**	**1487E2P**

[1] Does not meet CSA or UL requirements
[2] Maintains ratings on CSA and UL approved wireway

Distributed by Gross Automation | +1 (262) 252-1600. | hammondsales@grossautomation.com

Technical references and CAD downloads available at www.hammondmfg.com

All dimensions in inches unless specified otherwise

© Hammond Manufacturing

Canada: 519.822.2960 or 905.456.3770 USA: 716.630.7030

Data Subject to change without notice

Description	2.5 x 2.5 Part No.	4 x 4 Part No.	6 x 6 Part No.	8 x 8 Part No.
Tee Fitting	1487BT	1487CT	1487DT	1487ET
Cross Fitting	1487BY	1487CY	1487DY	1487EY
Center Hole Reducers				
Reducer - 4 x 4 to 2.5 x 2.5	-	1487CRC [2]	-	-
Reducer - 6 x 6 to 4 x 4	-	-	1487DRC [2]	-
Reducer - 8 x 8 to 4 x 4	-	-	-	1487ERCC [2]
Reducer - 8 x 8 to 6 x 6	-	-	-	1487ERCD [2]
Edge Hole Reducers				
Reducer 4 x 4 to 2.5 x 2.5	-	1487CRE [2]	-	-
Reducer 6 x 6 to 4 x 4	-	-	1487DRE [2]	-
Reducer 8 x 8 to 4 x 4	-	-	-	1487EREC [2]
Reducer 8 x 8 to 6 x 6	-	-	-	1487ERED [2]
Box Connector	1487BK [1]	1487CK [1]	1487DK [1]	1487EK [1]
Drop Hanger	1485BL1[1]	1485CL1[1]	1485DL1[1]	1485EL1[1]
Bracket Hanger	1485BL2[1]	1485CL2[1]	1485DL2[1]	1485EL2[1]
Cover Plate	1487BH [2]	1487CH [2]	1487DH [2]	1487EH [2]
Gasket & Screws	1487BS [1]	1487CS [1]	1487DS [1]	1487ES [1]

[1] Does not meet CSA or UL requirements
[2] Maintains ratings on CSA and UL approved wireway

Typical Straight Section

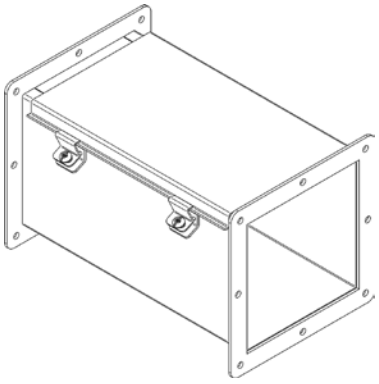

Nipple

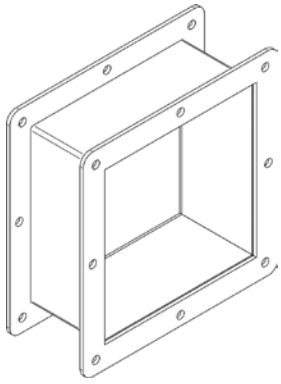

Swivel Nipple

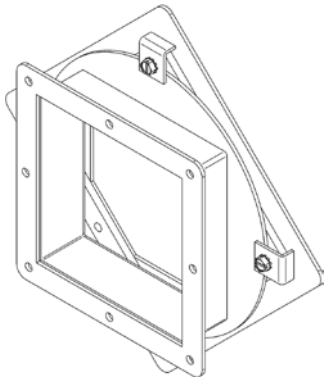

90 degree Elbow

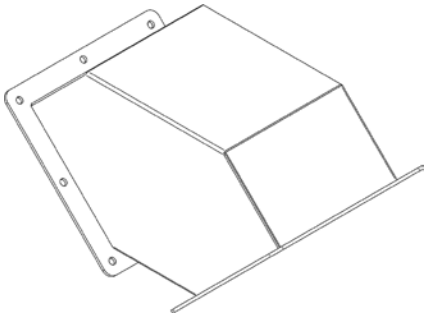

45 degree Elbow

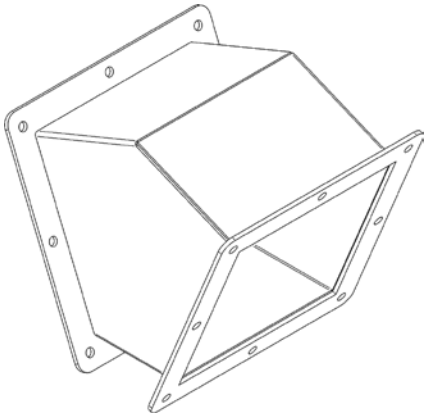

22.5 degree Elbow

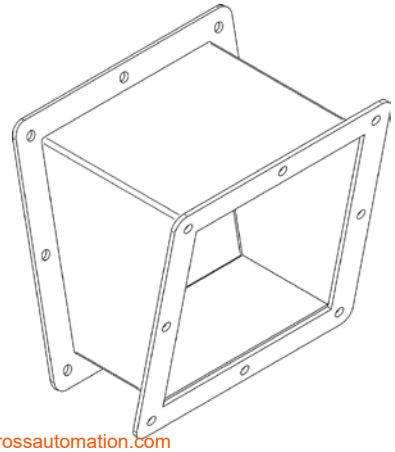

Distributed by Gross Automation | +1 (262) 252-1600. | hammondsales@grossautomation.com

Technical references and CAD downloads available at www.hammondmfg.com

All dimensions in inches unless specified otherwise

© Hammond Manufacturing

Barrier Kit

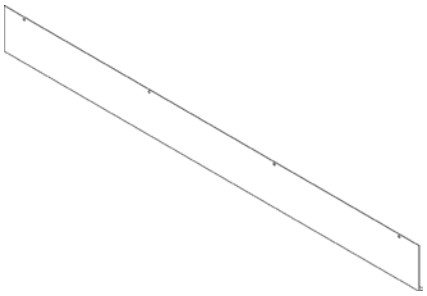

- Divides wireway into two or more compartments. Barriers are fastened to wireway sections with screws.

Adjustable Fitting

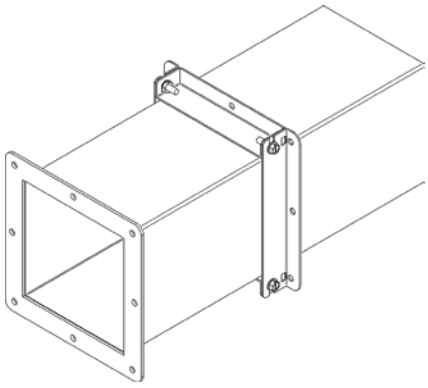

- Allows on site length adjustment of 1.5” to 13.5”

Flexible Fitting

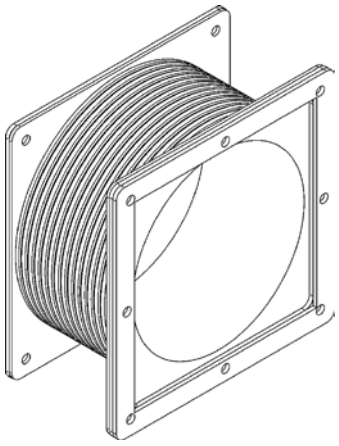

- Allows for easy alignment of sections or fittings
- Metal flanges
- Flexible synthetic “bellows” middle section

Cut-Off Fitting (Lay-In)

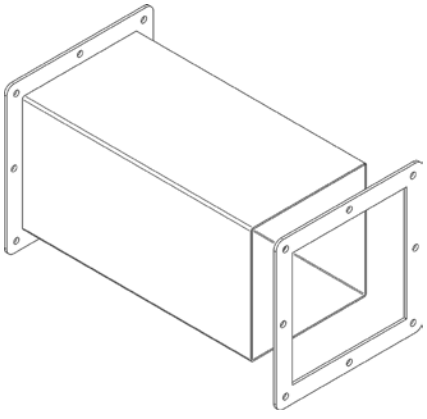

- Body comes in two pieces. Cut-off one piece, shorten cover, and weld together.

Tee Fitting

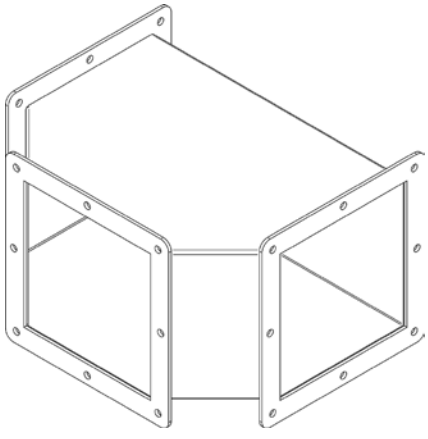

Box Connector

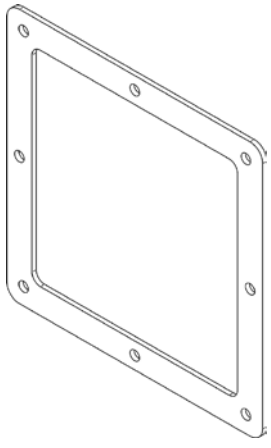

© Hammond Manufacturing

Bracket Hanger

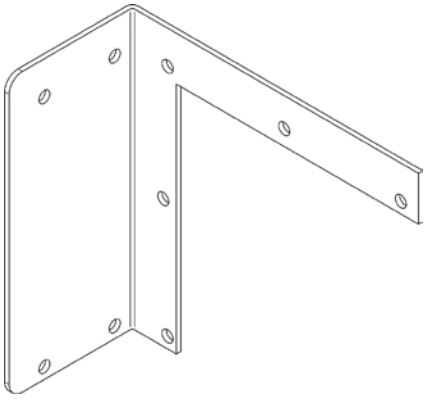

Reducers (Center Hole)

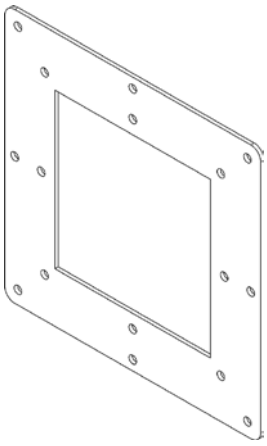

Reducers (Edge Hole)

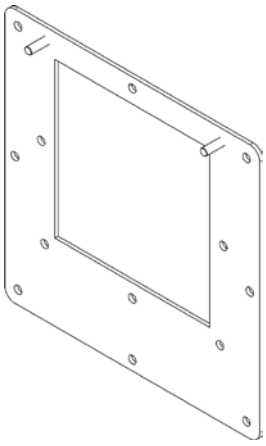

Cover Plate

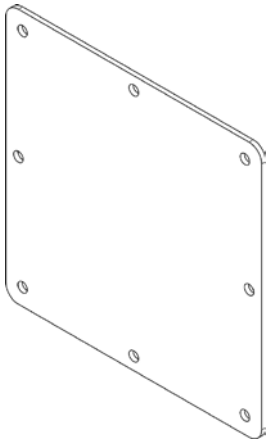

Cross Fitting

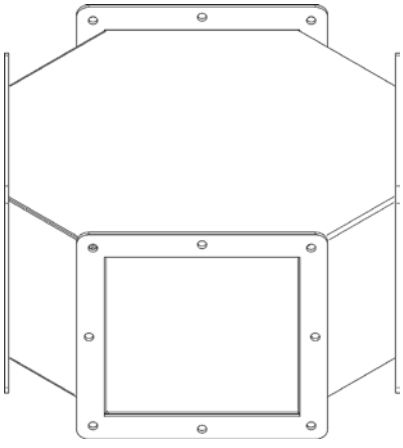

Drop Hanger

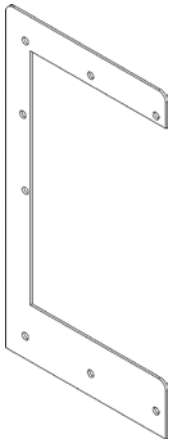

© Hammond Manufacturing

Type 4X Pull Through Wireway *1487SS Series*

Wireway & Accessories

Quick Link: hammfg.com/1487SS

Application

- Designed to enclose and protect electrical wiring from dirt, dust, oil and water.
- Ideal for connecting machines to control panels or power sources.

Standards

- UL 870 Type 1 (unless marked[1])
- CSA Type 1 (unless marked[1])
- Complies with
  - NEMA Type 4, 4X and 12
  - IEC 60529, IP66

Construction

- Bodies and covers are formed from 14 gauge 304 stainless steel with 10 gauge flanges.
- Continuous flange around wireway ends, requires cables to be pulled through.
- Smooth continuously welded seams.
- Interior surfaces are smooth to prevent wire damage during installation.
- Butt hinged covers are secured with easily operated screw clamps.
- Oil resistant gaskets are permanently secured.
- Solid oil resistant gaskets are used between flanges when sections and fittings are bolted together.
- One gasket kit, complete with hardware is provided with each straight section or fitting.

Finish

- Sections and fittings are natural stainless steel with a smooth brushed finish.

Description	4 x 4 Part No.	6 x 6 Part No.	8 x 8 Part No.
12" Section	1487C12SS	1487D12SS	1487E12SS
24" Section	1487C24SS	1487D24SS	1487E24SS
36" Section	1487C36SS	1487D36SS	1487E36SS
48" Section	1487C48SS	1487D48SS	1487E48SS
60" Section	1487C60SS	1487D60SS	1487E60SS
120" Section	1487C120SS	1487D120SS	1487E120SS
6" Nipple	1487CM6SS	1487DM6SS	1487EM6SS
Standard Swivel Nipple	1487CV2SS	1487DV2SS	1487EV2SS
Flexible Fitting	1487CFFSS [1]	1487DFFSS [1]	1487EFFSS [1]
Adjustable Fitting	1487CXSS [1]	1487DXSS [1]	1487EXSS [1]
90° Elbow	1487C9PSS	1487D9PSS	1487E9PSS
45° Elbow	1487C4PSS	1487D4PSS	1487E4PSS
Tee Fitting	1487CTSS	1487DTSS	1487ETSS
Center Hole Reducers			
Reducer - 6 x 6 to 4 x 4	-	1487DRCSS [2]	-
Reducer - 8 x 8 to 4 x 4	-	-	1487ERCCSS [2]
Reducer - 8 x 8 to 6 x 6	-	-	1487ERCDSS [2]
Edge Hole Reducers			
Reducer 6 x 6 to 4 x 4	-	1487DRESS [2]	-
Reducer 8 x 8 to 4 x 4	-	-	1487ERECSS [2]
Reducer 8 x 8 to 6 x 6	-	-	1487EREDSS [2]
Box Connector	1487CKSS [1]	1487DKSS [1]	1487EKSS [1]
Drop Hanger	1487CL1SS [1]	1487DL1SS [1]	1487EL1SS [1]
Bracket Hanger	1487CL2SS [1]	1487DL2SS [1]	1487EL2SS [1]
Cover Plate	1487CHSS [2]	1487DHSS [2]	1487EHSS [2]
Gasket & Screws	1487CSSS [1]	1487DSSS [1]	1487ESSS [1]

[1] Does not meet CSA or UL requirements
[2] Maintains ratings on CSA and UL approved wireway

Distributed by Gross Automation | +1 (262) 252-1600. | hammondsales@grossautomation.com

Technical references and CAD downloads available at www.hammondmfg.com

All dimensions in inches unless specified otherwise

© Hammond Manufacturing

Typical Straight Section

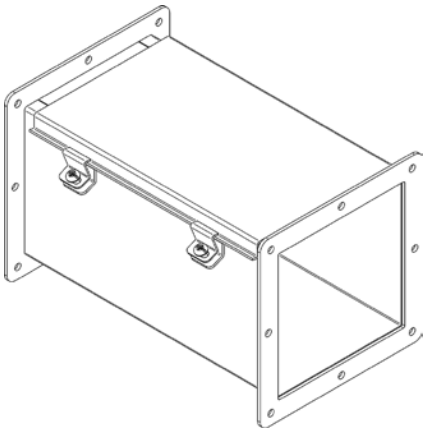

Adjustable Fitting

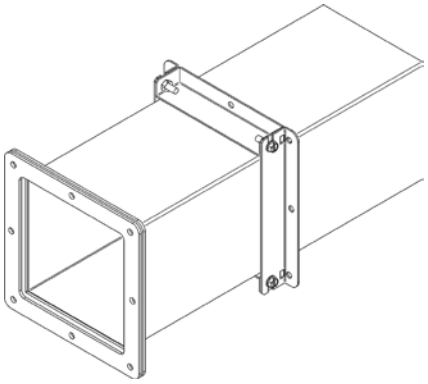

90 Degree Elbow

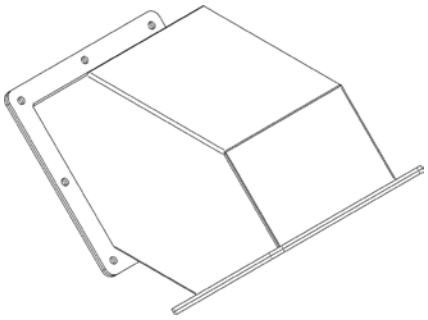

Nipple

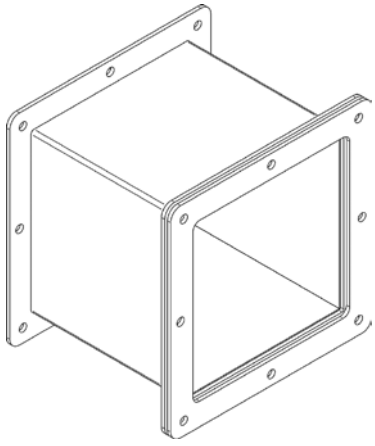

Swivel Nipple

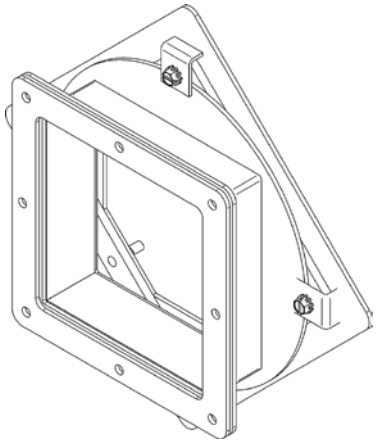

45 Degree Elbow

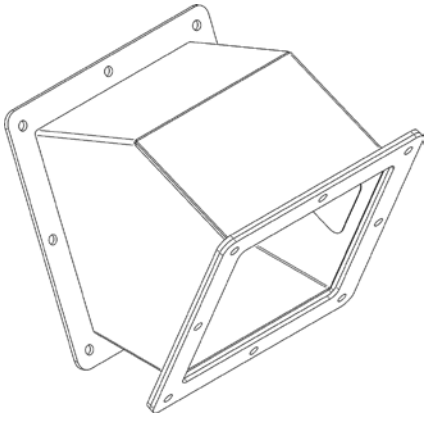

Tee Fitting

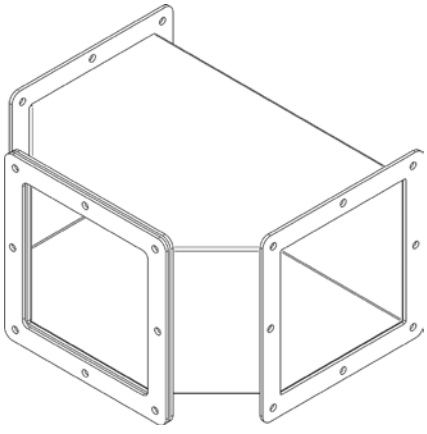

Box Connector

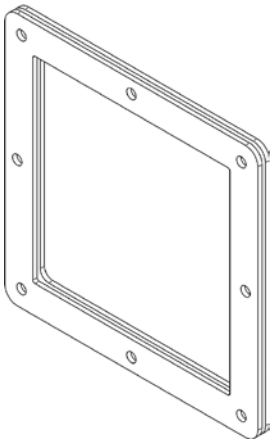

Drop Hanger

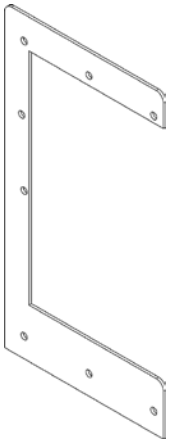

© Hammond Manufacturing

Bracket Hanger

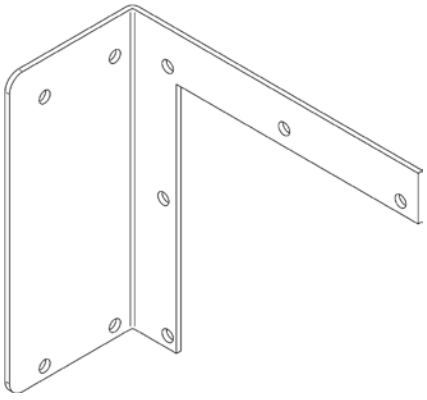

Reducers (Center Hole)

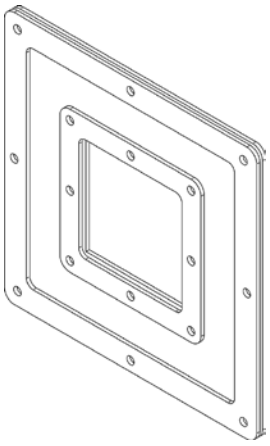

Reducers (Edge Hole)

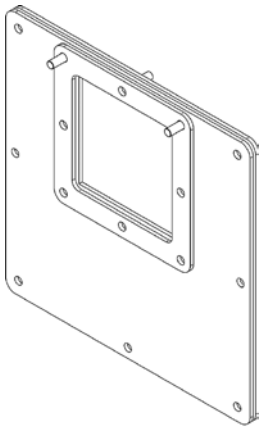

Flexible Fitting

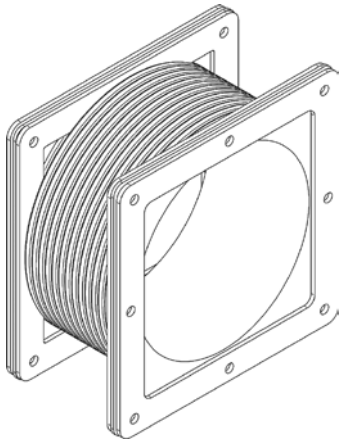

- Allows for easy alignment of sections or fittings
- Metal flanges
- Flexible synthetic “bellows” middle section

Cover Plate

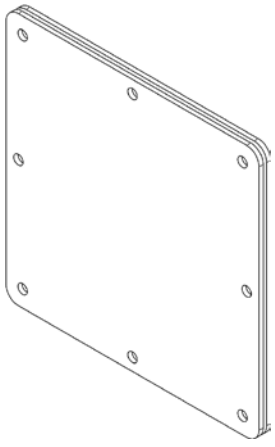

© Hammond Manufacturing

Type 12 Wiring Trough *1486 Series*

Quick Link: hammfg.com/1486

Application

- Designed to enclose and protect multiple wiring junctions from dirt, dust, oil and water.

Standards

- UL 870 Type 1
- CSA Type 1
- Complies with
  - NEMA Type 12
  - IEC 60529, IP54

Construction

- Formed 14 gauge steel.
- Smooth continuously welded seams.
- Butt hinged cover is secured with easily operated screw clamps.
- Oil resistant gaskets are permanently secured.
- 12 gauge external mounting feet are welded to the back.

Finish

- Troughs and covers are finished in ANSI 61 gray powder coating.

	Enclosure		
Part No.	H	D	L
1486B12	2.50	2.50	12.00
1486B18	2.50	2.50	18.00
1486B24	2.50	2.50	24.00
1486B30	2.50	2.50	30.00
1486B36	2.50	2.50	36.00
1486B48	2.50	2.50	48.00
1486B60	2.50	2.50	60.00
1486B72	2.50	2.50	72.00
1486C12	4.00	4.00	12.00
1486C18	4.00	4.00	18.00
1486C24	4.00	4.00	24.00
1486C30	4.00	4.00	30.00
1486C36	4.00	4.00	36.00
1486C48	4.00	4.00	48.00
1486C60	4.00	4.00	60.00
1486C72	4.00	4.00	72.00
1486D12	6.00	6.00	12.00
1486D18	6.00	6.00	18.00
1486D24	6.00	6.00	24.00
1486D30	6.00	6.00	30.00
1486D36	6.00	6.00	36.00
1486D48	6.00	6.00	48.00
1486D60	6.00	6.00	60.00
1486D72	6.00	6.00	72.00

Distributed by Gross Automation | +1 (262) 252-1600. | hammondsales@grossautomation.com

Technical references and CAD downloads available at www.hammondmfg.com

All dimensions in inches unless specified otherwise

Quality Products. Service Excellence.
© Hammond Manufacturing
Canada: 519.822.2960 or 905.456.3770 USA: 716.630.7030
Data Subject to change without notice

Type 1 Lay-In Wireway *CW Series*

Wireway & Accessories

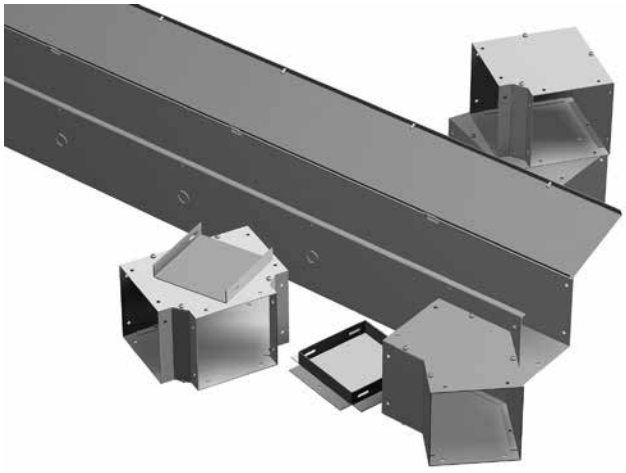

Quick Link: hammfg.com/CW

Application

- Construction designed to ensure electrical continuity and to permit fast and easy indoor installation of multiple wireway runs.

Standards

- UL-50 Type 1
- cUL Type 1
- Complies with
  - IEC 60529, IP20

Construction - Screw Cover

- Formed from 16 or 14 gauge steel
- Flat covers have keyhole screw slots
- Straight sections do not have knockouts
- Unobstructed interior speeds up laying of cables
- Optional hanger brackets allow for vertical or horizontal mounting
- Joiners sold separately

Construction - Hinge Cover

- Formed from 16 or 14 gauge steel
- Hinge covers are hinged on 24" centers
- Straight sections are provided with adequate concentric knockouts (1/2", 3/4" conduit size)
- Knockouts are on 12" centers
- Joiner is included with each straight section
- Unobstructed interior speeds up laying of cables
- Optional hanger brackets allow for vertical or horizontal mounting

Finish

- Sections and components are finished in ANSI 61 gray. Couplings are unpainted galvanized

Screw Cover - Straight Section

Length	Knock Outs	2.5 x 2.5	4 x 4	6 x 6	8 x 8	10 x 10	12 x 12
12.00	w/KO	CWSC212	CWSC412	CWSC612	CWSC812	-	CWSC1212
18.00	w/KO	-	-	-	-	-	-
24.00	w/KO	CWSC224	CWSC424	CWSC624	CWSC824	-	CWSC1224
36.00	w/KO	CWSC236	CWSC436	CWSC636	CWSC836	-	CWSC1236
48.00	w/KO	CWSC248	CWSC448	CWSC648	CWSC848	-	CWSC1248
60.00	w/KO	CWSC260	CWSC460	CWSC660	CWSC860	-	CWSC1260
72.00	w/KO	-	CWSC472	CWSC672	-	-	-
96.00	w/KO	-	-	-	-	-	-
120.00	w/KO	CWSC2120	CWSC4120	CWSC6120	CWSC8120	-	-
12.00	No KO	CWSC212NK	CWSC412NK	CWSC612NK	CWSC812NK	CWSC1012NK	CWSC1212NK
18.00	No KO	-	CWSC418NK	CWSC618NK	CWSC818NK	-	-
24.00	No KO	CWSC224NK	CWSC424NK	CWSC624NK	CWSC824NK	CWSC1024NK	CWSC1224NK
36.00	No KO	CWSC236NK	CWSC436NK	CWSC636NK	CWSC836NK	CWSC1036NK	CWSC1236NK
48.00	No KO	CWSC248NK	CWSC448NK	CWSC648NK	CWSC848NK	CWSC1048NK	CWSC1248NK
60.00	No KO	CWSC260NK	CWSC460NK	CWSC660NK	CWSC860NK	CWSC1060NK	CWSC1260NK
72.00	No KO	-	CWSC472NK	CWSC672NK	CWSC872NK	CWSC1072NK	CWSC1272NK
96.00	No KO	-	-	-	-	CWSC1096NK	CWSC1296NK
120.00	No KO	CWSC2120NK	CWSC4120NK	CWSC6120NK	CWSC8120NK	CWSC10120NK	CWSC12120NK

© Hammond Manufacturing

Type 1 Lay-In Wireway *CW Series*

Wireway & Accessories

Hinge Cover - Straight Section

Length	Knock Outs	2.5 x 2.5	4 x 4	6 x 6	8 x 8	10 x 10	12 x 12
12.00	w/KO	CWST212	CWST412	CWST612	CWST812	-	-
18.00	w/KO	-	-	-	-	-	-
24.00	w/KO	CWST224	CWST424	CWST624	CWST824	-	-
36.00	w/KO	CWST236	CWST436	CWST636	CWST836	-	-
48.00	w/KO	CWST248	CWST448	CWST648	CWST848	-	-
60.00	w/KO	CWST260	CWST460	CWST660	CWST860	-	-
72.00	w/KO	CWST272	CWST472	CWST672	CWST872	-	-
96.00	w/KO	CWST296	CWST496	CWST696	CWST896	-	-
120.00	w/KO	CWST2120	CWST4120	CWST6120	CWST8120	-	-
12.00	No KO	CWST212NK	CWST412NK	CWST612NK	CWST812NK	CWST1012NK	CWST1212NK
18.00	No KO	-	CWST418NK	CWST618NK	CWST818NK	-	-
24.00	No KO	CWST224NK	CWST424NK	CWST624NK	CWST824NK	CWST1024NK	CWST1224NK
36.00	No KO	CWST236NK	CWST436NK	CWST636NK	CWST836NK	CWST1036NK	CWST1236NK
48.00	No KO	CWST248NK	CWST448NK	CWST648NK	CWST848NK	CWST1048NK	CWST1248NK
60.00	No KO	CWST260NK	CWST460NK	CWST660NK	CWST860NK	CWST1060NK	CWST1260NK
72.00	No KO	-	CWST472NK	CWST672NK	CWST872NK	CWST1072NK	CWST1272NK
96.00	No KO	-	CWST496NK	CWST696NK	CWST896NK	CWST1096NK	CWST1296NK
120.00	No KO	CWST2120NK	CWST4120NK	CWST6120NK	CWST8120NK	CWST10120NK	CWST12120NK

Accessories	2.5 x 2.5	4 x 4	6 x 6	8 x 8	10 x 10	12 x 12
Straight Section Barrier 60”	CWBA260	CWBA460	CWBA660	CWBA860	-	-
Elbow 90 degrees	CWEL290	CWEL490	CWEL690	CWEL890	CWEL1090	CWEL1290
Elbow 45 degrees	CWEL245	CWEL445	CWEL645	CWEL845	CWEL1045	CWEL1245
Elbow 22.5 degrees	CWEL222	CWEL422	CWEL622	CWEL822	-	-
Tee Fitting	CWTF2	CWTF4	CWTF6	CWTF8	CWTF10	CWTF12
Cross Fitting	CWCF2	CWCF4	CWCF6	CWCF8	CWCF10	CWCF12
Reducer 4 x 4 to 2.5 x 2.5	-	CWRD42	-	-	-	-
Reducer 6 x 6 to 4 x 4	-		CWRD64	-	-	-
Reducer 8 x 8 to 6 x 6	-	-	-	CWRD86	-	-
Reducer 10 x 10 to 8 x 8	-	-	-	-	CWRD108	-
Reducer 12 x 12 to 8 x 8	-	-	-	-	-	CWRD128
Reducer 12 x 12 to 10 x 10	-	-	-	-	-	CWRD1210
Corner Reducer 4 x 4 to 2.5 x 2.5	-	CWCRD42	-	-	-	-
Corner Reducer 6 x 6 to 4 x 4	-	-	CWCRD64	-	-	-
Corner Reducer 8 x 8 to 6 x 6	-	-	-	CWCRD86	-	-
Bracket Hanger Ceiling Type	CWHD2	CWHD4	CWHD6	CWHD8	CWHD10	CWHD12
Bracket Hanger Wall Type	CWHW2	CWHW4	CWHW6	CWHW8	CWHW10	CWHW12
Closing Plate	CWCP2	CWCP4	CWCP6	CWCP8	CWCP10	CWCP12
Closing Plate w/o Knockouts	CWCP2NK	CWCP4NK	CWCP6NK	CWCP8NK	CWCP10NK	CWCP12NK
Adapter (Box Connector)	CWAD2	CWAD4	CWAD6	CWAD8	CWAD10	CWAD12
Joiner	CWJO2	CWJO4	CWJO6	CWJO8	CWJO10	CWJO12
Telescope Fitting	CWTL2	CWTL4	CWTL6	CWTL8	CWTL10	CWTL12

Distributed by Gross Automation | +1 (262) 252-1600. | hammondsales@grossautomation.com

Technical references and CAD downloads available at www.hammondmfg.com

All dimensions in inches unless specified otherwise

Quality Products. Service Excellence.
© Hammond Manufacturing
Canada: 519.822.2960 or 905.456.3770 USA: 716.630.7030
Data Subject to change without notice

Type 1 Lay In Hinge Cover Wireway

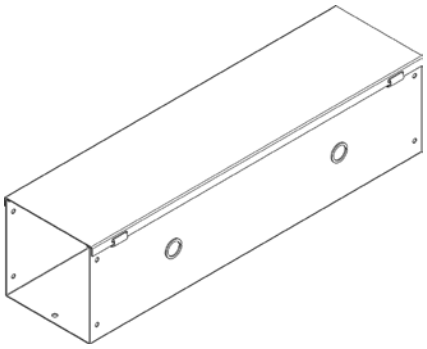

Type 1 Lay In Screw Cover Wireway

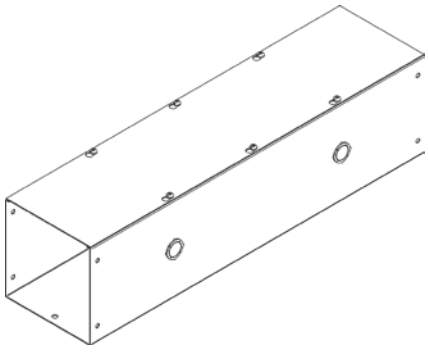

Type 1 Lay In Screw Cover Wireway - w/o Knockouts

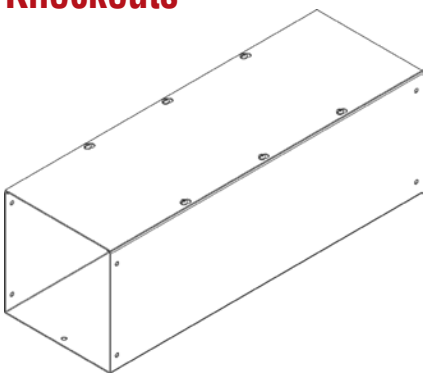

Type 1 Lay In Hinge Cover Wireway - w/o Knockouts

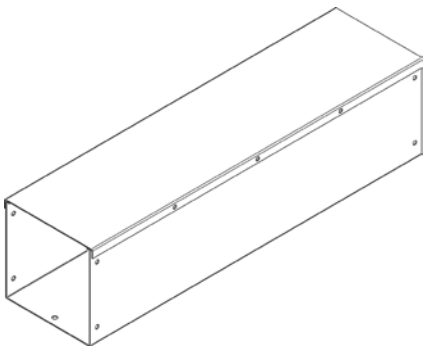

Joiner

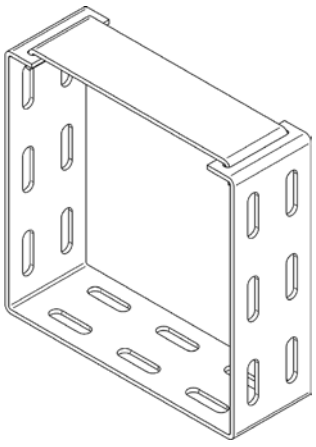

Straight Section Barrier

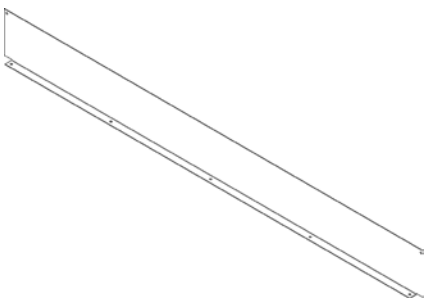

Corner Reducer

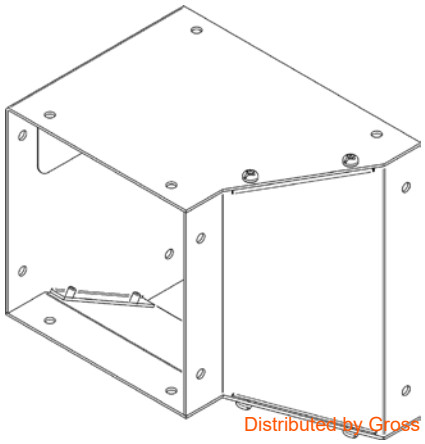

Cross Fitting

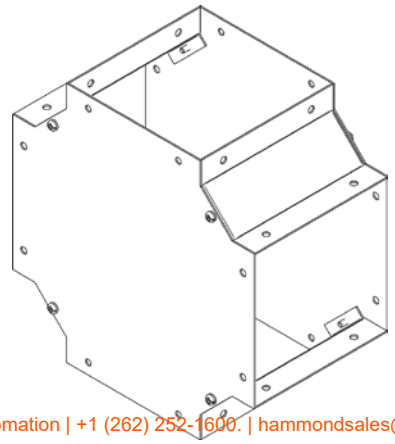

Tee Fitting

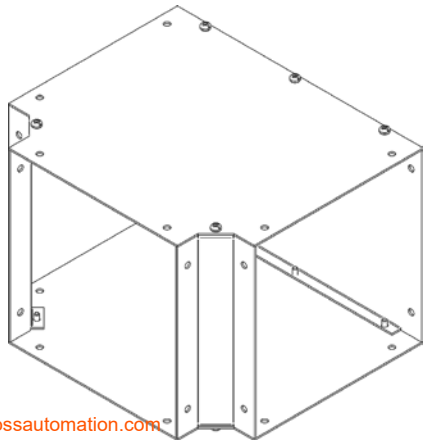

Distributed by Gross Automation | +1 (262) 252-1600. | hammondsales@grossautomation.com

Technical references and CAD downloads available at www.hammondmfg.com

All dimensions in inches unless specified otherwise

© Hammond Manufacturing

Canada: 519.822.2960 or 905.456.3770 USA: 716.630.7030

Data Subject to change without notice

Telecope Fitting

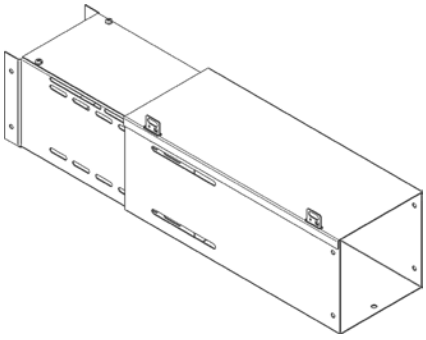

90 degree Elbow

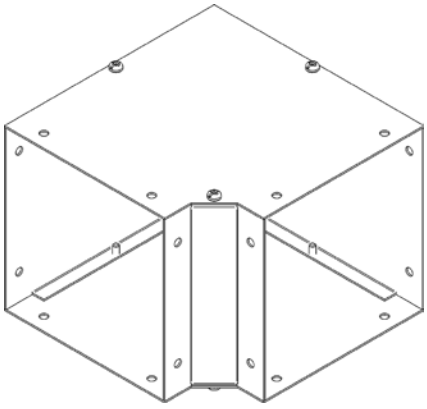

45 degree Elbow

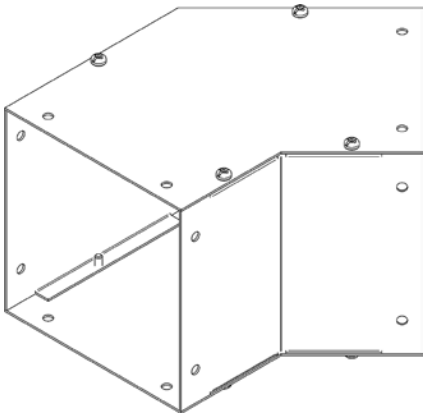

22.5 degree Elbow

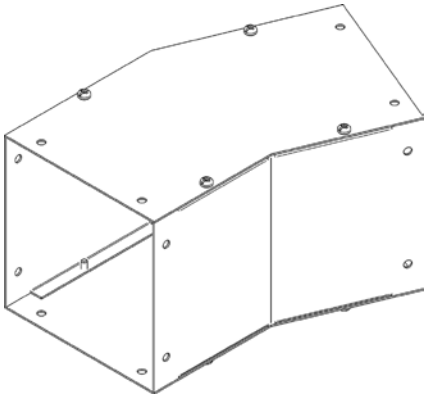

Closing Plate

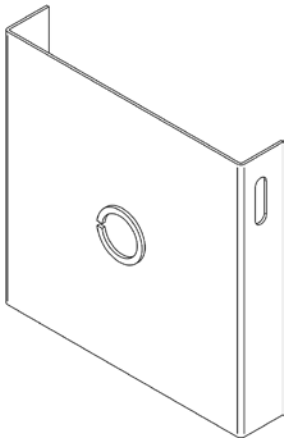

Adapter (Box Connector)

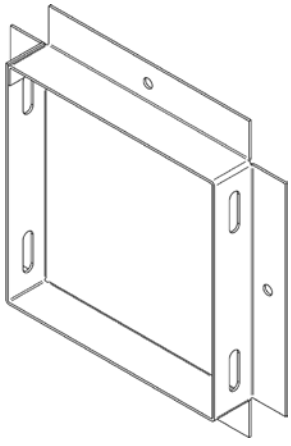

Bracket Hanger Wall Type

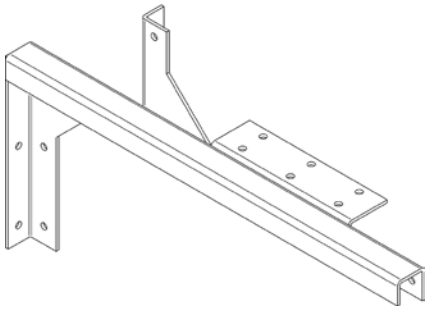

Bracket Hanger Ceiling Type

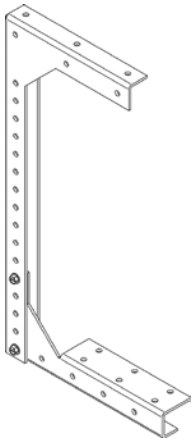

Reducer

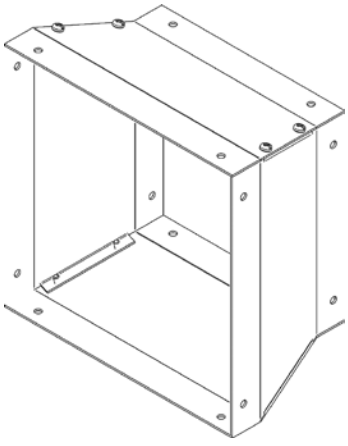

Distributed by Gross Automation | +1 (262) 252-1600. | hammondsales@grossautomation.com

Technical references and CAD downloads available at www.hammondmfg.com

All dimensions in inches unless specified otherwise

© Hammond Manufacturing

Quality Products. Service Excellence.

Canada: 519.822.2960 or 905.456.3770 USA: 716.630.7030

Data Subject to change without notice

Type 3R Wiring Trough *C3RWT Series*

Quick Link: hammfg.com/C3RWT

Application

- Designed for use to protect multiple wiring junctions in outdoor environments against the ingress of rain, sleet, snow and the external formation of ice.

Standards

- UL870 Type 3R
- CSA Type 3R
- Complies with
  - NEMA Type 3R
  - IEC 60529, IP24

Construction

- Formed and spot welded from 14 or 16 gauge galvanized steel
- Drip shield top design protects the enclosure against rain, snow or sleet
- Embossed mounting holes on back of enclosure
- Slip on removable front cover is secured with screws
- Padlocking hasp
- To fully comply with UL870 - 2008 requirements a bonding stud is provided on the cover and a ground stud is provided in the enclosure
- A #10 AWG - 12" grounding strap with crimped on ring terminals is also provided to comply with UL requirements

Finish

- Enclosure and cover are finished in ANSI 61 gray powder coating.

Part No.	Enclosure H	D	L
C3RWT412	4.00	4.00	12.00
C3RWT418	4.00	4.00	18.00
C3RWT424	4.00	4.00	24.00
C3RWT436	4.00	4.00	36.00
C3RWT448	4.00	4.00	48.00
C3RWT460	4.00	4.00	60.00
C3RWT472	4.00	4.00	72.00
C3RWT612	6.00	6.00	12.00
C3RWT618	6.00	6.00	18.00
C3RWT624	6.00	6.00	24.00
C3RWT636	6.00	6.00	36.00
C3RWT648	6.00	6.00	48.00
C3RWT660	6.00	6.00	60.00
C3RWT672	6.00	6.00	72.00
C3RWT812	8.00	8.00	12.00
C3RWT824	8.00	8.00	24.00
C3RWT836	8.00	8.00	36.00
C3RWT848	8.00	8.00	48.00
C3RWT860	8.00	8.00	60.00

Part No.	Enclosure H	D	L
C3RWT872	8.00	8.00	72.00
C3RWT896	8.00	8.00	96.00
C3RWT8116	8.00	8.00	116.00
C3RWT1024	10.00	10.00	24.00
C3RWT1036	10.00	10.00	36.00
C3RWT1048	10.00	10.00	48.00
C3RWT1060	10.00	10.00	60.00
C3RWT1072	10.00	10.00	72.00
C3RWT1096	10.00	10.00	96.00
C3RWT10116	10.00	10.00	116.00
C3RWT1224	12.00	12.00	24.00
C3RWT1236	12.00	12.00	36.00
C3RWT1248	12.00	12.00	48.00
C3RWT1260	12.00	12.00	60.00
C3RWT1272	12.00	12.00	72.00
C3RWT1284	12.00	12.00	84.00
C3RWT1296	12.00	12.00	96.00
C3RWT12116	12.00	12.00	116.00

Distributed by Gross Automation | +1 (888) 252-1600. | hammondsales@grossautomation.com

Technical references and CAD downloads available at www.hammondmfg.com

All dimensions in inches unless specified otherwise

© Hammond Manufacturing

Commercial Enclosures

Type 1 Mild Steel Junction Box
CSKO Series
Screw Cover and w/ Knockouts 204

Type 1 Mild Steel Junction Box
CS Series
Screw Cover and without Knockouts 205

Type 1 Mild Steel Junction Box
CHKO Series
Hinge Door with Quarter Turn and w/ Knockouts..... 206

Type 1 Unpainted Galvanized Steel Junction Box
CSG Series
Screw Cover and without Knockouts 207

Type 1 Unpainted Galvanized Steel Junction Box
CSKOG Series
Screw Cover and w/ Knockouts 208

Type 3R Painted Galvanized Steel Junction Box
C3R SC NKO Series
Lift-Off Cover with Screws without Knockouts 209

Type 3R Painted Galvanized Steel Junction Box
C3R SC Series
Lift-Off Cover with Screws and w/ Knockouts 210

Type 3R Painted Galvanized Steel Junction Box
C3RESCNK Series
Screw Cover and without Knockouts 211

Type 3R Painted Galvanized Steel Junction Box
C3R HCR SM Series
Hinge Door with Snap Latch and w/ Knockouts..... 212

Type 3R Aluminum Junction Box
C3RESCNKAL Series
Screw Cover and without Knockouts 213

Type 1 Mild Steel Splitter Box
CSB Series
Hinged Door with Screw 214

Type 4/3R Mild Steel Splitter Box
CN4SB Series
Hinge Door with Quarter Turn 215

Splitter Blocks
CSBL Series 216

Grounding Kits
CGK Series..... 216

Type 1 Mild Steel Splitter Trough
CST Series
Hinged Door with Screw 217

Type 4/3R Mild Steel Splitter Trough
CN4ST Series
Hinge Door with Quarter Turn 218

Type 1 Mild Steel Metering Cabinets
CMC Series
Hinge Door with Quarter Turn 219

Type 1 Mild Steel Metering Cabinets (Hydro Quebec Version)
CMC Q Series
Hinge Door with Quarter Turn 220

Type 1 Mild Steel Metering Cabinets (Ontario Hydro Version)
CMC O Series
Hinge Door with Handle and Viewing Window..... 221

Type 3R Mild Steel Metering Cabinets
C3RMC Series
Hinge Door with Handle..... 222

Type 3R Current Transformer Cabinet
HCT Series
Single and Double Door Enclosures..... 223

Type 1 Mild Steel Small Wallmount Enclosure
N1J Series
Hinge Door with Quarter Turn 224

© Hammond Manufacturing

Commercial Enclosures

Type 1 Mild Steel Wallmount Enclosure
N1A Series
Hinge Door with Quarter Turn 225

Type 1 Mild Steel Wallmount Enclosure
1420 Series
Hinge Door with Quarter Turn and w/ Mounting Flange
..... 226

Type 1 Mild Steel 3 Piece Wallmount Enclosure
N1W S Series
Hinge Door with Quarter Turn 227

Type 1 Mild Steel 3 Piece Flushmount Enclosure
N1W F Series
Hinge Door with Quarter Turn 228

Type 3R Painted Galvanized Steel Wallmount Enclosure
C3R HCRMD Series
Continuous Hinge Door with Screws 229

Type 3R Painted Galvanized Steel Enclosure
C3R HCLO Series
Lift-Off Hinge Door with Snap Latch 230

Type 1 Mild Steel Component Case
1416 Series
Ventilated Cover with Screws 231

© Hammond Manufacturing

Type 1 Mild Steel Junction Box *CSKO Series*

Screw Cover and w/ Knockouts

Quick Link: hammfg.com/CSKO

Application

- Designed for general purpose indoor commercial use as a junction, pull or switch box.

Standards

- UL-50 Type 1
- CSA Type 1
- Complies with:
  - NEMA Type 1
  - IEC 60529, IP20

Construction

- Formed and spot welded from 16 or 14 gauge steel depending on size.
- Flat steel covers fastened with plated steel screws.
- Keyhole slots permit cover to be lifted off without removing screws entirely.
- Easily removed knockouts on all 4 sides (see drawings for sizes and locations).
- Through holes in back for wall mounting.
- Grounding location embossed in body.

Finish

- Enclosure and cover are finished in ANSI 61 gray powder coating.

Accessories

- Flush Covers...*See Page* ***311***

Part No.	Enclosure H	W	D
CSKO443	4.00	4.00	3.00
CSKO663	6.00	6.00	3.00
CSKO863	8.00	6.00	3.00
CSKO16143	16.00	14.00	3.00
CSKO18143	18.00	14.00	3.00
CSKO20143	20.00	14.00	3.00
CSKO444	4.00	4.00	4.00
CSKO644	6.00	4.00	4.00
CSKO664	6.00	6.00	4.00
CSKO864	8.00	6.00	4.00
CSKO884	8.00	8.00	4.00
CSKO1084	10.00	8.00	4.00
CSKO10104	10.00	10.00	4.00
CSKO1284	12.00	8.00	4.00
CSKO12104	12.00	10.00	4.00
CSKO12124	12.00	12.00	4.00
CSKO16124	16.00	12.00	4.00
CSKO18124	18.00	12.00	4.00
CSKO18184	18.00	18.00	4.00
CSKO24244	24.00	24.00	4.00
CSKO666	6.00	6.00	6.00
CSKO886	8.00	8.00	6.00
CSKO1086	10.00	8.00	6.00
CSKO10106	10.00	10.00	6.00
CSKO12106	12.00	10.00	6.00
CSKO12126	12.00	12.00	6.00
CSKO16126	16.00	12.00	6.00
CSKO16166	16.00	16.00	6.00
CSKO18126	18.00	12.00	6.00
CSKO18186	18.00	18.00	6.00
CSKO24186	24.00	18.00	6.00
CSKO24246	24.00	24.00	6.00
CSKO30246	30.00	24.00	6.00
CSKO36246	36.00	24.00	6.00
CSKO12128	12.00	12.00	8.00
CSKO16168	16.00	16.00	8.00
CSKO24248	24.00	24.00	8.00
CSKO202010	20.00	20.00	10.00
CSKO242410	24.00	24.00	10.00
CSKO302010	30.00	20.00	10.00
CSKO362410	36.00	24.00	10.00

Distributed by Gross Automation | +1 (262) 252-1600. | hammondsales@grossautomation.com

Technical references and CAD downloads available at www.hammondmfg.com

All dimensions in inches unless specified otherwise

© Hammond Manufacturing

Quality Products. Service Excellence.

Canada: 519.822.2960 or 905.456.3770 USA: 716.630.7030

Data Subject to change without notice

Type 1 Mild Steel Junction Box *CS Series*

Screw Cover and without Knockouts

Quick Link: hammfg.com/CS

Application

- Designed for general purpose indoor commercial use as a junction, pull or switch box.

Standards

- UL-50 Type 1
- CSA Type 1
- Complies with
  - NEMA Type 1
  - IEC 60529, IP20

Construction

- Formed and spot welded from 16, 14 or 12 gauge steel depending on size.
- Flat steel covers fastened with plated steel screws.
- Keyhole slots permit cover to be lifted off without removing screws entirely.
- Through holes in back for wall mounting.
- Grounding location embossed in body.

Finish

- Enclosure and cover are finished in ANSI 61 gray powder coating.

Accessories

- Flush Covers...*See Page* ***311***

	Enclosure		
Part No.	H	W	D
CS443	4.00	4.00	3.00
CS663	6.00	6.00	3.00
CS863	8.00	6.00	3.00
CS16143	16.00	14.00	3.00
CS18143	18.00	14.00	3.00
CS20143	20.00	14.00	3.00
CS444	4.00	4.00	4.00
CS644	6.00	4.00	4.00
CS664	6.00	6.00	4.00
CS864	8.00	6.00	4.00
CS884	8.00	8.00	4.00
CS1084	10.00	8.00	4.00
CS10104	10.00	10.00	4.00
CS1284	12.00	8.00	4.00
CS12104	12.00	10.00	4.00
CS12124	12.00	12.00	4.00
CS16124	16.00	12.00	4.00
CS18124	18.00	12.00	4.00
CS18184	18.00	18.00	4.00
CS24244	24.00	24.00	4.00
CS666	6.00	6.00	6.00
CS886	8.00	8.00	6.00
CS1086	10.00	8.00	6.00
CS10106	10.00	10.00	6.00
CS12106	12.00	10.00	6.00
CS12126	12.00	12.00	6.00
CS16126	16.00	12.00	6.00
CS16166	16.00	16.00	6.00
CS18126	18.00	12.00	6.00
CS18186	18.00	18.00	6.00
CS24186	24.00	18.00	6.00
CS24246	24.00	24.00	6.00
CS30246	30.00	24.00	6.00
CS36246	36.00	24.00	6.00
CS36366	36.00	36.00	6.00
CS12128	12.00	12.00	8.00
CS16168	16.00	16.00	8.00
CS18188	18.00	18.00	8.00
CS24248	24.00	24.00	8.00
CS36248	36.00	24.00	8.00
CS202010	20.00	20.00	10.00
CS242410	24.00	24.00	10.00
CS302010	30.00	20.00	10.00
CS362410	36.00	24.00	10.00
CS363612	36.00	36.00	12.00

Distributed by Gross Automation | +1 (262) 252-1600. | hammondsales@grossautomation.com

Technical references and CAD downloads available at www.hammondmfg.com

All dimensions in inches unless specified otherwise

© Hammond Manufacturing

Type 1 Mild Steel Junction Box *CHKO Series*

Hinge Door with Quarter Turn and w/ Knockouts

Quick Link: hammfg.com/CHKO

Application

- Designed for general purpose indoor commercial use as a junction, pull or switch box.
- Hinged cover with latch provides easy access during installation and maintenance.

Standards

- UL-50 Type 1
- CSA Type 1
- Complies with
  - NEMA Type 1
  - IEC 60529, IP20

Construction

- Formed and spot welded from 16 or 14 gauge steel depending on size.
- Formed steel covers close by use of slotted quarter turn latch.
- Full swing door using butt hinges.
- Easily removed knockouts on all 4 sides (see drawings for sizes and locations).
- Through holes in back for wall mounting.
- Grounding location embossed in body.

Finish

- Enclosure and cover are finished in ANSI 61 gray powder coating.

Accessories

- Type 1 Lock Kit...*See Page* ***270***

Part No.	Enclosure H	W	D
CHKO663	6.00	6.00	3.50
CHKO644	6.00	4.00	4.00
CHKO664	6.00	6.00	4.00
CHKO864	8.00	6.00	4.00
CHKO884	8.00	8.00	4.00
CHKO1084	10.00	8.00	4.00
CHKO10104	10.00	10.00	4.00
CHKO1284	12.00	8.00	4.00
CHKO12104	12.00	10.00	4.00
CHKO12124	12.00	12.00	4.00
CHKO16124	16.00	12.00	4.00
CHKO18124	18.00	12.00	4.00
CHKO666	6.00	6.00	6.00
CHKO886	8.00	8.00	6.00
CHKO1086	10.00	8.00	6.00
CHKO10106	10.00	10.00	6.00
CHKO12106	12.00	10.00	6.00
CHKO12126	12.00	12.00	6.00
CHKO16126	16.00	12.00	6.00
CHKO16166	16.00	16.00	6.00
CHKO18126	18.00	12.00	6.00
CHKO18186	18.00	18.00	6.00
CHKO24186	24.00	18.00	6.00
CHKO24246	24.00	24.00	6.00
CHKO30246	30.00	24.00	6.00
CHKO36246	36.00	24.00	6.00
CHKO36248	36.00	24.00	8.00

Distributed by Gross Automation | +1 (262) 252-1600 | hammondsales@grossautomation.com

Technical references and CAD downloads available at www.hammondmfg.com

All dimensions in inches unless specified otherwise

© Hammond Manufacturing

Type 1 Unpainted Galvanized Steel Junction Box *CSG Series*

Screw Cover and without Knockouts

Quick Link: hammfg.com/CSG

Application

- Designed for general purpose indoor commercial use as a junction, pull or switch box.

Standards

- UL-50 Type 1
- CSA Type 1
- Complies with
  - NEMA Type 1
  - IEC 60529, IP20

Construction

- Formed and spot welded from 16 or 14 gauge G90 galvanized steel depending on size.
- Flat steel covers fastened with plated steel screws.
- Keyhole slots permit cover to be lifted off without removing screws entirely.
- Through holes in back for wall mounting.
- Grounding location embossed in body.

Finish

- Enclosure and cover are unpainted galvanized steel.

	Enclosure		
Part No.	H	W	D
CSG664	6.00	6.00	4.00
CSG884	8.00	8.00	4.00
CSG10104	10.00	10.00	4.00
CSG12124	12.00	12.00	4.00
CSG666	6.00	6.00	6.00
CSG886	8.00	8.00	6.00
CSG10106	10.00	10.00	6.00
CSG12106	12.00	10.00	6.00
CSG12126	12.00	12.00	6.00
CSG18126	18.00	12.00	6.00
CSG18186	18.00	18.00	6.00
CSG24246	24.00	24.00	6.00
CSG12128	12.00	12.00	8.00
CSG18188	18.00	18.00	8.00
CSG24248	24.00	24.00	8.00

Distributed by Gross Automation | +1 (262) 252-1600. | hammondsales@grossautomation.com

Technical references and CAD downloads available at www.hammondmfg.com

All dimensions in inches unless specified otherwise

© Hammond Manufacturing

Canada: 519.822.2960 or 905.456.3770 USA: 716.630.7030

Type 1 Unpainted Galvanized Steel Junction Box *CSKOG Series*

Screw Cover and w/ Knockouts

Quick Link: hammfg.com/CSKOG

Application

- Designed for general purpose indoor commercial use as a junction, pull or switch box.

Standards

- UL-50 Type 1
- CSA Type 1
- Complies with:
  - NEMA Type 1
  - IEC 60529, IP20

Construction

- Formed and spot welded from 16 or 14 gauge G90 galvanized steel depending on size.
- Flat steel covers fastened with plated steel screws.
- Keyhole slots permit cover to be lifted off without removing screws entirely.
- Easily removed knockouts on all 4 sides (see drawings for sizes and locations).
- Through holes in back for wall mounting.
- Grounding location embossed in body.

Finish

- Enclosure and cover are unpainted galvanized steel.

	Enclosure		
Part No.	H	W	D
CSKOG664	6.00	6.00	4.00
CSKOG884	8.00	8.00	4.00
CSKOG10104	10.00	10.00	4.00
CSKOG12124	12.00	12.00	4.00
CSKOG666	6.00	6.00	6.00
CSKOG886	8.00	8.00	6.00
CSKOG10106	10.00	10.00	6.00
CSKOG12126	12.00	12.00	6.00
CSKOG12128	12.00	12.00	8.00

Distributed by Gross Automation | +1 (262) 252-1600. | hammondsales@grossautomation.com

Technical references and CAD downloads available at www.hammondmfg.com

All dimensions in inches unless specified otherwise

Quality Products. Service Excellence.
© Hammond Manufacturing
Canada: 519.822.2960 or 905.456.3770 USA: 716.630.7030
Data Subject to change without notice

Type 3R Painted Galvanized Steel Junction Box *C3R SC NKO Series*

Lift-Off Cover with Screws without Knockouts

Quick Link: hammfg.com/C3RSCNKO

Application

- Designed for use as a wiring/junction box.
- Provides protection against rain, sleet, snow and dripping water.

Standards

- UL-50 Type 3R
- CSA Type 3R
- Complies with:
  - NEMA Type 3R
  - IEC 60529, IP24

Construction

- Formed and spot welded from 16 or 14 gauge galvanized steel.
- Drip-shield top and seam-free sides, front and back.
- Slip-on removable cover fastened with plated steel screws.
- Door handles on body type C enclosures.
- Embossed mounting holes on back of enclosure.
- Padlocking hasp.
- No Gasket.

Finish

- Enclosure and cover are finished in ANSI 61 gray powder coating.

	Enclosure		
Part No.	H	W	D
C3R664SCNKO	6.00	6.00	4.00
C3R884SCNKO	8.00	8.00	4.00
C3R10104SCNKO	10.00	10.00	4.00
C3R12124SCNKO	12.00	12.00	4.00
C3R10106SCNKO	10.00	10.00	6.00
C3R12126SCNKO	12.00	12.00	6.00
C3R16126SCNKO	16.00	12.00	6.00
C3R18186SCNKO	18.00	18.00	6.00

© Hammond Manufacturing

Type 3R Painted Galvanized Steel Junction Box *C3R SC Series*

Lift-Off Cover with Screws and w/ Knockouts

Quick Link: hammfg.com/C3RSC

Application

- Designed for use as a wiring/junction box.
- Provides protection against rain, sleet, snow and dripping water.

Standards

- UL-50 Type 3R
- CSA Type 3R
- Complies with:
  - NEMA Type 3R
  - IEC 60529, IP24

Construction

- Formed and spot welded from 16 or 14 gauge galvanized steel.
- Drip-shield top and seam-free sides, front and back.
- Slip-on removable cover fastened with plated steel screws.
- Door handles on body type C enclosures.
- Embossed mounting holes on back of enclosure.
- Easily removed knockouts on bottom of enclosure.
- Padlocking hasp.
- No Gasket.

Finish

- Enclosure and cover are finished in ANSI 61 gray powder coating.

	Enclosure		
Part No.	H	W	D
C3R444SC	4.00	4.00	4.00
C3R644SC	6.00	4.00	4.00
C3R1244SC	12.00	4.00	4.00
C3R664SC	6.00	6.00	4.00
C3R864SC	8.00	6.00	4.00
C3R884SC	8.00	8.00	4.00
C3R1084SC	10.00	8.00	4.00
C3R1284SC	12.00	8.00	4.00
C3R10104SC	10.00	10.00	4.00
C3R12104SC	12.00	10.00	4.00
C3R12124SC	12.00	12.00	4.00
C3R18124SC	18.00	12.00	4.00
C3R18184SC	18.00	18.00	4.00
C3R666SC	6.00	6.00	6.00
C3R1866SC	18.00	6.00	6.00
C3R886SC	8.00	8.00	6.00
C3R1086SC	10.00	8.00	6.00
C3R10106SC	10.00	10.00	6.00
C3R1286SC	12.00	8.00	6.00
C3R12106SC	12.00	10.00	6.00
C3R12126SC	12.00	12.00	6.00
C3R15126SC	15.00	12.00	6.00
C3R16126SC	16.00	12.00	6.00
C3R18126SC	18.00	12.00	6.00
C3R18186SC	18.00	18.00	6.00
C3R24126SC	24.00	12.00	6.00
C3R24186SC	24.00	18.00	6.00
C3R24246SC	24.00	24.00	6.00
C3R888SC	8.00	8.00	8.00
C3R2488SC	24.00	8.00	8.00
C3R12128SC	12.00	12.00	8.00
C3R15128SC	15.00	12.00	8.00
C3R18128SC	18.00	12.00	8.00
C3R24168SC	24.00	16.00	8.00
C3R18188SC	18.00	18.00	8.00
C3R24188SC	24.00	18.00	8.00
C3R24208SC	24.00	20.00	8.00
C3R24248SC	24.00	24.00	8.00
C3R30248SC	30.00	24.00	8.00
C3R48368SC	48.00	36.00	8.00
C3R181810SC	18.00	18.00	10.00
C3R241810SC	24.00	18.00	10.00
C3R242410SC	24.00	24.00	10.00
C3R302410SC	30.00	24.00	10.00
C3R242412SC	24.00	24.00	12.00
C3R303012SC	30.00	30.00	12.00
C3R363012SC	36.00	30.00	12.00
C3R363612SC	36.00	36.00	12.00
C3R303016SC	30.00	30.00	16.00
C3R483616SC	48.00	36.00	16.00

Distributed by Gross Automation | +1 (262) 252-1600. | hammondsales@grossautomation.com

Technical references and CAD downloads available at www.hammondmfg.com

All dimensions in inches unless specified otherwise

Quality Products. Service Excellence.
© Hammond Manufacturing
Canada: 519.822.2960 or 905.456.3770 USA: 716.630.7030
Data Subject to change without notice

Type 3R Painted Galvanized Steel Junction Box *C3RESCNK Series*

Screw Cover and without Knockouts

Quick Link: hammfg.com/C3RESCNK

Application

- Designed for use as a wiring/junction box.
- Provides protection against rain, sleet, snow and dripping water.

Standards

- UL-50 Type 3R
- CSA Type 3R
- Complies with:
  - NEMA Type 3R
  - IEC 60529, IP24

Construction

- Formed and spot welded from 16 gauge galvanized steel (24x24x6 is 14 gauge).
- Drip-shield top and seam-free sides, front and back.
- Slip-on removable cover fastened with plated steel screws.
- External mounting feet
- Oil resistant gaskets are permanently secured
- A bonding stud is provided on the door and a grounding stud is provided in the box.

Finish

- Enclosure and cover are finished in ANSI 61 gray powder coating.

	Enclosure		
Part No.	H	W	D
C3R664ESCNK	6.00	6.00	4.00
C3R884ESCNK	8.00	8.00	4.00
C3R886ESCNK	8.00	8.00	6.00
C3R10104ESCNK	10.00	10.00	4.00
C3R10106ESCNK	10.00	10.00	6.00
C3R12124ESCNK	12.00	12.00	4.00
C3R12126ESCNK	12.00	12.00	6.00
C3R16166ESCNK	16.00	16.00	6.00
C3R18186ESCNK	18.00	18.00	6.00
C3R24246ESCNK	24.00	24.00	6.00

Distributed by Gross Automation | +1 (262) 252-1600. | hammondsales@grossautomation.com

Technical references and CAD downloads available at www.hammondmfg.com

All dimensions in inches unless specified otherwise

© Hammond Manufacturing

Canada: 519.822.2960 or 905.456.3770 USA: 716.630.7030

Data Subject to change without notice

Type 3R Painted Galvanized Steel Junction Box *C3R HCR SM Series*

Hinge Door with Snap Latch and w/ Knockouts

Quick Link: hammfg.com/C3RHCRSM

Application

- Designed for use as a wiring/junction box.
- Provides protection against rain, sleet, snow and dripping water.

Standards

- UL-50 Type 3R
- CSA Type 3R
- Complies with
  - NEMA Type 3R
  - IEC 60529, IP24

Construction

- Formed and spot welded from 16 gauge galvanized steel.
- Drip-shield top and seam-free sides, front and back.
- Galvanized steel hinge has stainless steel pin.
- Provisions for padlocking on zinc-plated draw pull catch.
- Easily removed knockouts on bottom of enclosure.
- Panel studs provided for mounting optional panels.
- External mounting feet.
- Oil resistant gaskets are permanently secured.

Finish

- Enclosure and cover are finished in ANSI 61 gray powder coating.

Accessories

- Additional Inner Panels...*See Page* ***284***
- Perforated Inner Panels...*See Page* ***287***

	Enclosure			Optional Inner Panel		
Part No.	H	W	D	Part No.	H	W
C3R644HCR	6.00	4.00	4.00	**N1JP64**	4.25	2.25
C3R664HCR	6.00	6.00	4.00	**N1JP66**	4.25	4.25
C3R864HCR	8.00	6.00	4.00	**N1JP86**	6.25	4.25
C3R886HCR	8.00	8.00	6.00	**N1JP88**	6.25	6.25
C3R1086HCR	10.00	8.00	6.00	**N1JP108**	8.25	6.25
C3R12106HCR	12.00	10.00	6.00	**N1JP1210**	10.25	8.25
C3R12126HCR	12.00	12.00	6.00	**N1JP1212**	10.25	10.25
C3R121210HCR	12.00	12.00	10.00	**N1JP1212**	10.25	10.25

Distributed by Gross Automation | +1 (262) 252-1600. | hammondsales@grossautomation.com

Technical references and CAD downloads available at www.hammondmfg.com

All dimensions in inches unless specified otherwise

© Hammond Manufacturing

Quality Products. Service Excellence.

Canada: 519.822.2960 or 905.456.3770 USA: 716.630.7030

Data Subject to change without notice

Type 3R Aluminum Junction Box *C3RESCNKAL Series*

Screw Cover and without Knockouts

Quick Link: hammfg.com/C3RESCNKAL

Application

- Designed for use as a wiring/junction box.
- Provides protection against rain, sleet, snow and dripping water.

Standards

- UL-50 Type 3R
- CSA Type 3R
- Complies with:
  - NEMA Type 3R
  - IEC 60529, IP24

Construction

- Formed from 0.08" Type 5052 H-32 aluminum
- Drip-shield top and seam-free sides, front and back.
- Slip-on removable cover fastened with plated steel screws.
- External mounting feet.
- Oil resistant gaskets are permanently secured.
- A bonding stud is provided on the door and a grounding stud is provided in the box..

Finish

- Enclosure and cover are finished in natural unfinished aluminum.

	Enclosure		
Part No.	H	W	D
C3R664ESCNKAL	6.00	6.00	4.00
C3R884ESCNKAL	8.00	8.00	4.00
C3R886ESCNKAL	8.00	8.00	6.00
C3R10104ESCNKAL	10.00	10.00	4.00
C3R10106ESCNKAL	10.00	10.00	6.00
C3R12124ESCNKAL	12.00	12.00	4.00
C3R12126ESCNKAL	12.00	12.00	6.00

© Hammond Manufacturing

Type 1 Mild Steel Splitter Box *CSB Series*

Hinged Door with Screw

Quick Link: hammfg.com/CSB

Application

- The splitter boxes are designed for indoor distribution of up to 600 A (max) service using either 3 or 4 wires.

Standards

- CSA Type 1
- Complies with
  - IEC 60529, IP20

Construction

- Formed and spot welded from 14 or 16 gauge steel.
- Factory installed splitter blocks - 3 or 4 wire option. Empty box without splitter blocks also offered.
- Series of knockouts on each side.
- Padlocking hasp.

Finish

- Enclosure and cover are finished in ANSI 61 gray powder coating.

Accessories

- Splitter Blocks...*See Page* ***216***
- Grounding Kits...*See Page* ***216***

3 Wire Part No.	4 Wire Part No.	Less Blocks Part No.	CU/AL Amps	Enclosure H	W	D
CSB73	**CSB74**	**CSB70**	70/70	12.00	10.00	4.00
CSB103	**CSB104**	**CSB100**	125/120	15.00	10.00	4.00
CSB203	**CSB204**	**CSB200**	225/225	18.00	12.00	5.00
CSB403	**CSB404**	**CSB400**	400/340	24.00	17.00	6.00
CSB603*	**CSB604***	**CSB600***	600/574	30.00	24.00	7.00

* 14 gauge steel

© Hammond Manufacturing

Type 4/3R Mild Steel Splitter Box *CN4SB Series*

Hinge Door with Quarter Turn

Quick Link: hammfg.com/CN4SB

Application

- The splitter boxes are designed for distribution of up to 600 A (max) service using either 3 or 4 wires.

Standards

- CSA Type 3R, 12, 4
- Complies with
  - IEC 60529, IP66

Construction

- Formed 16 gauge steel (14 gauge on 30x24)
- Factory installed splitter blocks.
- Smooth, continuously welded seams ground smooth.
- Door stiffeners are provided where required for increased strength and rigidity - designed to also permit additional mounting options.
- Formed lip on enclosure to exclude flowing liquids and contaminants.
- Door latches feature the added safety of quarter turn slot requiring use of tool for opening.
- Doors may be easily removed for modifications and are interchangeable.
- Seamless poured-in place gasket.
- Collar studs provided for mounting inner panel.
- Includes hardware kit with panel mounting nuts and sealing washers for wall mounting holes.
- Hinges are constructed from 304 stainless steel.
- Hinge pins are stainless steel.
- Inner panel is included.

Finish

- Cover and enclosure are finished in recoatable smooth ANSI 61 gray powder coating.
- Inner panel is finished in white powder coating.

Accessories

- Quarter Turn Inserts and Keys...*See Page* ***273***
- Mounting Foot Kit...*See Page* ***277***
- Rear Hole Plugs...*See Page* ***277***
- Replacement Hinge Pins...*See Page* ***274***
- Quarter Turn Assemblies...*See Page* ***273***
- Padlock Adaptor...*See Page* ***272***
- Splitter Blocks...*See Page* ***216***
- Grounding Kits...*See Page* ***216***
- Ventilation...*See Page* ***259***

3 Wire Part No.	4 Wire Part No.	CU/AL Amps	Enclosure H	Enclosure W	Enclosure D	Optional Grounding Kit
CN4SB73	**CN4SB74**	70/70	12.00	10.00	5.00	**CGK125**
CN4SB103	**CN4SB104**	125/120	15.00	10.00	5.00	**CGK125**
CN4SB203	**CN4SB204**	225/225	18.00	12.00	5.00	**CGK225**
CN4SB403	**CN4SB404**	400/340	24.00	17.00	6.00	**CGK400**
CN4SB603*	**CN4SB604***	600/574	30.00	24.00	7.00	**CGK600**

* 14 gauge steel

© Hammond Manufacturing

Splitter Blocks

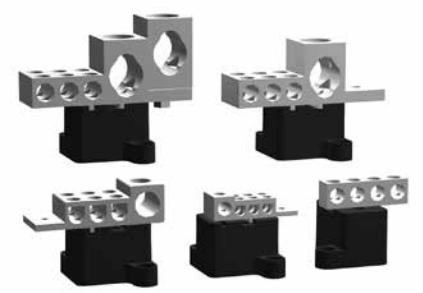

Application

- These blocks are used in Hammond standard splitter troughs and boxes.
- The design includes the main and branch lugs which can use either copper or aluminum conductors.
- All blocks are rated 600 V.

Construction

- Cu-Al monopiece connectors are secured to insulators.
- Each block includes a main lug and branch lugs.

Finish

- N/A

Part No.	Main Lug Ampacity	Max./Min. Wire Capacity	Branch Lugs Ampacity	Max./ Min. Wire Capacity
CSBL125B	125	1/0 - 14	3/70	3 x (2-14)
CSBL125T	125	1/0 - 14	6/70	6 x (2-14)
CSBL225	225	300MCM - 6	6/125	6 x (2/0-14)
CSBL400	400	600MCM - 4 or (2x) 250 MCM - 1/0	6/200	6 x (3/0-14)
CSBL600	600	(2x) 600MCM - 4 or (4x) 250MCM - 1/0	6/200	6 x (3/0-14)

Grounding Kits

Application

- Designed for use with aluminum and copper conductors.

Standards

- CSA Certified

Construction

- Lugs are constructed from high strength, high conductive aluminum alloy 6061-T6, rated at 90°C.
- Kits are supplied with all necessary mounting hardware.

Finish

- N/A

Part No.	Application	Number of Circuits and Wire Sizes
CGK125	Splitter Box 70 A, 125 A	4 x (2-14 CU-AL)
CGK225	Splitter Box 225 A/Trough 70 A, 125A, 225 A	7 x (2-14 CU-AL)
CGK400	Splitter Box/Trough 400 A	7 x (2-14 CU-AL) & 1 x (1/0-14 CU-AL)
CGK600	Splitter Box/Trough 600 A	7 x (2-14 CU-AL) & 1 x (300 MCM - 6 CU-AL)
CGK	Junction/Pull Box	3 x (4-14 CU-AL)

© Hammond Manufacturing

Type 1 Mild Steel Splitter Trough *CST Series*

Hinged Door with Screw

Application

- The splitter troughs are designed for distribution of up to 600 A (max) service using either 3 or 4 wires.

Standards

- CSA Certified
- Complies with
  - IEC 60529, IP20

Construction

- Formed and spot welded from 16 gauge steel. When width is 8" or more, 14 gauge.
- Factory installed splitter blocks.
- Series of knockouts on each side.
- Padlocking hasp.

Finish

- Cover and enclosure are finished in recoatable smooth ANSI 61 gray powder coating.

Accessories

- Splitter Blocks...*See Page* ***216***
- Grounding Kits...*See Page* ***216***

Quick Link: hammfg.com/CST

3 Wire Part No.	4 Wire Part No.	Less Blocks Part No.	CU/AL Amps	Dimensions H	W	D
CST273	**CST274**	-	70/70	24.00	6.00	4.00
CST373	**CST374**	-	70/70	36.00	6.00	4.00
CST473	**CST474**	-	70/70	48.00	6.00	4.00
CST2103	**CST2104**	**CST2100**	125/120	24.00	6.00	4.00
CST3103	**CST3104**	**CST3100**	125/120	36.00	6.00	4.00
CST4103	**CST4104**	**CST4100**	125/120	48.00	6.00	4.00
CST6103*	**CST6104***	**CST6100***	125/120	72.00	8.00	5.00
CST2203*	-	**CST2200***	225/225	24.00	8.00	5.00
CST3203*	**CST3204***	**CST3200***	225/225	36.00	8.00	5.00
CST4203*	**CST4204***	**CST4200***	225/225	48.00	8.00	5.00
CST5203*	**CST5204***	**CST5200***	225/225	60.00	8.00	5.00
CST6203*	**CST6204***	**-**	225/225	72.00	8.00	5.00
CST3403*	-	**CST3400***	400/340	36.00	10.00	6.00
CST4403*	**CST4404***	**CST4400***	400/340	48.00	10.00	6.00
CST5403*	**CST5404***	**CST5400***	400/340	60.00	10.00	6.00
CST6403*	**CST6404***	**CST6400***	400/340	72.00	10.00	6.00
CST4603*	**CST4604***	-	600/574	48.00	10.00	6.00
CST5603*	**CST5604***	-	600/574	60.00	10.00	6.00
CST6603*	**CST6604***	-	600/574	72.00	10.00	6.00

* 14 gauge steel

© Hammond Manufacturing

Type 4/3R Mild Steel Splitter Trough *CN4ST Series*

Hinge Door with Quarter Turn

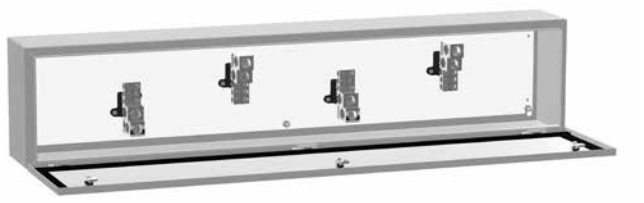

Inner Panel Included

Quick Link: hammfg.com/CN4ST

Application

- The splitter troughs are designed for distribution of up to 600 A (max) service using either 3 or 4 wires.

Standards

- CSA Certified Type 3R, 12, 4
- Complies with
  - IEC 60529, IP66

Construction

- Formed and spot welded from 16 gauge steel. When width is 8" or more, 14 gauge.
- Factory installed splitter blocks.
- Smooth, continuously welded seams ground smooth.
- Door stiffeners are provided where required for increased strength and rigidity - designed to also permit additional mounting options.
- Formed lip on enclosure to exclude flowing liquids and contaminants.
- Door latches feature the added safety of quarter turn slot requiring use of tool for opening.
- Doors may be easily removed for modifications and are interchangeable.
- Seamless poured-in place gasket.
- Collar studs provided for mounting inner panel.
- Includes hardware kit with panel mounting nuts and sealing washers for wall mounting holes.
- Hinges are constructed from 304 stainless steel.
- Hinge pins are stainless steel.
- Inner panel is included.

Finish

- Cover and enclosure are finished in recoatable smooth ANSI 61 gray powder coating.
- Inner panel is finished in white powder coating.

Accessories

- Quarter Turn Inserts and Keys...*See Page* ***273***
- Mounting Foot Kit...*See Page* ***277***
- Rear Hole Plugs...*See Page* ***277***
- Replacement Hinge Pins...*See Page* ***274***
- Quarter Turn Assemblies...*See Page* ***273***
- Padlock Adaptor...*See Page* ***272***
- Splitter Blocks...*See Page* ***216***
- Grounding Kits...*See Page* ***216***

3 Wire Part No.	4 Wire Part No.	CU/AL Amps	Enclosure H	Enclosure W	Enclosure D	Optional Grounding Kit
CN4ST273	CN4ST274	70/70	24.00	6.00	5.00	CGK225
CN4ST373	CN4ST374	70/70	36.00	6.00	5.00	CGK225
CN4ST473	CN4ST474	70/70	48.00	6.00	5.00	CGK225
CN4ST2103	CN4ST2104	125/120	24.00	6.00	5.00	CGK225
CN4ST3103	CN4ST3104	125/120	36.00	6.00	5.00	CGK225
CN4ST4103	CN4ST4104	125/120	48.00	6.00	5.00	CGK225
CN4ST6103	CN4ST6104	125/120	72.00	8.00	6.00	CGK225
CN4ST2203	-	225/225	24.00	8.00	5.00	CGK225
CN4ST3203	CN4ST3204	225/225	36.00	8.00	6.00	CGK225
CN4ST4203	CN4ST4204	225/225	48.00	8.00	6.00	CGK225
CN4ST5203	CN4ST5204	225/225	60.00	8.00	6.00	CGK225
CN4ST6203	CN4ST6204	225/225	72.00	8.00	6.00	CGK225
CN4ST3403	-	400/340	36.00	10.00	6.00	CGK400
CN4ST4403	CN4ST4404	400/340	48.00	10.00	6.00	CGK400
CN4ST5403	CN4ST5404	400/340	60.00	10.00	6.00	CGK400
CN4ST6403	CN4ST6404	400/340	72.00	10.00	6.00	CGK400
CN4ST4603	CN4ST4604	600/574	48.00	10.00	6.00	CGK600
CN4ST5603	CN4ST5604	600/574	60.00	10.00	6.00	CGK600
CN4ST6603	CN4ST6604	600/574	72.00	10.00	6.00	CGK600

Distributed by Gross Automation | +1 (262) 252-1600. | hammondsales@grossautomation.com

Technical references and CAD downloads available at www.hammondmfg.com

All dimensions in inches unless specified otherwise

Quality Products. Service Excellence.
© Hammond Manufacturing
Canada: 519.822.2960 or 905.456.3770 USA: 716.630.7030
Data Subject to change without notice

Type 1 Mild Steel Metering Cabinets *CMC Series*

Hinge Door with Quarter Turn

Quick Link: hammfg.com/CMC

Application

- Designed for indoor housing of metering transformers.

Standards

- CSA Type 1
- Complies with
  - IEC 60529, IP20

Construction

- Formed and spot welded from 14 or 16 gauge steel.
- Spot welded construction and formed edges.
- Removable inner panel.
- Single and Double Door versions
- Hinged covers - single door with hasp closure, double door with hasp and quarter turn closure.
- 2 cutouts in top of each cabinet with metering plates included (except 27x13x10")

Finish

- Enclosure and cover are finished in ANSI 61 gray inside and out.
- Inner panel is finished in white powder coating

Part No.	Type of Door	Enclosure H	Enclosure W	Enclosure D	Inner Panel H	Inner Panel W
CMC202010	Single	20.00	20.00	10.00	16.00	16.00
CMC271310*	Single	27.00	13.00	10.00	23.00	9.00
CMC302010	Single	30.00	20.00	10.00	26.00	16.00
CMC303010	Double	30.00	30.00	10.00	26.00	26.00
CMC363612	Double	36.00	36.00	12.00	32.00	32.00
CMC484812	Double	48.00	48.00	12.00	44.00	44.00

* No cutouts in top or metering plates

Distributed by Gross Automation | +1 (262) 252-1600. | hammondsales@grossautomation.com

Technical references and CAD downloads available at www.hammondmfg.com

All dimensions in inches unless specified otherwise

© Hammond Manufacturing

Canada: 519.822.2960 or 905.456.3770 USA: 716.630.7030

Data Subject to change without notice

Type 1 Mild Steel Metering Cabinets (Hydro Quebec Version) *CMC Q Series*

Hinge Door with Quarter Turn

Quick Link: hammfg.com/CMCQ

Application

- Designed for indoor housing of metering transformers per Hydro Quebec specifications.

Standards

- CSA Type 1
- Complies with
  - IEC 60529, IP20

Construction

- Formed and spot welded from 14 or 16 gauge steel.
- Spot welded construction and formed edges.
- Removable inner panels.
- Hinged covers.
- 2 cutouts in top of each cabinet with metering plates included.

Finish

- Enclosure and cover are finished in ANSI 61 gray inside and out.
- Inner panel is finished in ANSI 61 gray powder coating.

Enclosure

Part No.	H	W	D	Gauge
CMCQ303010	30.00	30.00	10.00	16
CMCQ363612	36.00	36.00	12.00	14
CMCQ484812	48.00	48.00	12.00	14

Panels

Part No.	Description	H	W
CMCQP1	Accessory Plate	24.68	7.00
CMCQP2	Universal Support Current Panel	12.76	13.39
CMCQP3	Universal Support Voltage Panel	25.59	15.01

Panel Selection Guide

	Panel supplied with enclosure			Panel capacity per enclosure		
Part No.	CMCQP1	CMCQP2	CMCQP3	CMCQP1	CMCQP2	CMCQP3
CMCQ303010	1	1	1	1	1	1
CMCQ363612	1	1	1	2	1	1
CMCQ484812	1	1	1	2	2	1

Distributed by Gross Automation | +1 (262) 252-1600. | hammondsales@grossautomation.com

Technical references and CAD downloads available at www.hammondmfg.com

All dimensions in inches unless specified otherwise

© Hammond Manufacturing

Type 1 Mild Steel Metering Cabinets (Ontario Hydro Version) *CMC O Series*

Hinge Door with Handle and Viewing Window

Quick Link: hammfg.com/CMCO

Application

- Designed for certain specific Ontario metering applications.

Standards

- N/A

Construction

- Spot welded 16 gauge steel construction.
- Heavy duty padlockable “L” handle.
- Viewing window with removable cover plate.
- Pre-mounted ground lug.
- Inner panel with pre-drilled holes and mounting bracket.
- Oil resistant gasket.

Finish

- Enclosure and cover are finished in ANSI 61 gray inside and out.
- Inner panel is finished in ANSI 61 gray powder coating.

	Enclosure			Inner Panel	
Part No.	H	W	D	H	W
CMCO241610	24	16	10	20.5	14.75

© Hammond Manufacturing

Type 3R Mild Steel Metering Cabinets *C3RMC Series*

Hinge Door with Handle

Quick Link: hammfg.com/C3RMC

Application

- Designed for outdoor housing of metering transformers.

Standards

- CSA Approved, Type 3R
- Complies with
  - NEMA Type 3R
  - IEC 60529, IP24

Construction

- Offered in single and double door versions.
- Formed and seam welded from 14 or 16 gauge steel.
- Smooth, continuously welded seams ground smooth.
- Formed lip on enclosure to exclude flowing liquids and contaminants.
- Padlockable "L" style handle for 3 point latch system
- Oil resistant gaskets are permanently secured.
- Removable inner panel included.
- Collar studs provided for mounting inner panel.
- Doors may be easily removed for modifications and are interchangeable.
- Bonding stud provided on door and grounding stud installed in enclosure.
- Hinges are constructed from 304 stainless steel.
- Hinge pins are stainless steel.

Finish

- Cover and enclosure are phosphatized and finished with a recoatable ANSI 61 smooth Gray powder inside and out.
- Removable inner panel is finished in white powder coating.

Accessories

- Door Stop Kit...*See Page* ***304***
- Drip Shield Kit...*See Page* ***303***
- Mounting Foot Kit...*See Page* ***277***
- Ventilation...*See Page* ***259***

Part No.	Type of Door	Enclosure H	Enclosure W	Enclosure D	Inner Panel H	Inner Panel W
C3RMC202010	Single	20.00	20.00	10.00	18.17	18.17
C3RMC271310	Single	27.00	13.00	10.00	25.17	11.17
C3RMC302010	Single	30.00	20.00	10.00	28.17	18.17
C3RMC303010	Double	30.00	30.00	10.00	28.17	28.17
C3RMC363612	Double	36.00	36.00	12.00	34.17	34.17
C3RMC484812	Double	48.00	48.00	12.00	46.17	46.17

Distributed by Gross Automation | +1 (262) 252-1600. | hammondsales@grossautomation.com

Technical references and CAD downloads available at www.hammondmfg.com

All dimensions in inches unless specified otherwise

Quality Products. Service Excellence.

© Hammond Manufacturing

Canada: 519.822.2960 or 905.456.3770 USA: 716.630.7030

Data Subject to change without notice

Type 3R Current Transformer Cabinet *HCT Series*

Single and Double Door Enclosures

Quick Link: hammfg.com/HCT

Application

- Designed for use as Current Transformer Cabinet to house and protect instrument current transformers in outdoor applications.
- Can also be used as a general purpose enclosure for various junction, meter, transformer and relay applications..
- Provides protection against rain, sleet, snow and dripping water.

Standards

- UL 50 Type 3R
- Complies with
  - NEMA Type 3R
  - IEC 60529, IP24

Construction

- Body and covers formed from 14 gauge galvanized steel (12 gauge for units 30" and wider)
- Mounting studs for optional inner panels
- Integral drip shield top and seam free sides
- Mounting holes provided through back of enclosure
- Permanently installed lift off hinges
- Removable doors
- Single door design with hasp/screw closure. Double door design with handle.
- Padlocking provisions provided
- ANSI 61 Gray Polyester Powder finish inside and outside

Finish

- Cover and enclosure are phosphatized and finished with a recoatable ANSI 61 smooth Gray powder inside and out.

Accessories

- Additional Inner Panels...*See Page* ***281***
- Perforated Inner Panels...*See Page* ***285***
- Door Stop Kit...*See Page* ***304***
- Ventilation...*See Page* ***259***

Part No.	Type of Door	Enclosure H	W	D	Optional Panel Part No.
HCT302411H	Single	30.00	24.00	11.00	**18P2721**
HCT362011H	Single	36.00	20.00	11.00	**18P3317**
HCT363011H	Single	36.00	30.00	11.00	**18P3327**
HCT363611H	Single	36.00	36.00	11.00	**18P3333**
HCT482411H	Single	48.00	24.00	11.00	**18P4521**
HCT483011H	Single	48.00	30.00	11.00	**18P4527**
HCT483611H	Single	48.00	36.00	11.00	**18P4533**
HCT484814H	Double	48.00	48.00	14.00	**18P4545**

© Hammond Manufacturing

Type 1 Mild Steel Small Wallmount Enclosure *N1J Series*

Hinge Door with Quarter Turn

Quick Link: hammfg.com/N1J

Application

- Designed for indoor use to house controls, instruments and components not requiring oil-tight or dust-tight protection.

Standards

- UL-50 Type 1
- CSA Type 1
- Complies with
  - NEMA Type 1
  - IEC 60529, IP20

Construction

- Formed and spot welded from 16 gauge steel.
- Formed steel covers close by use of slotted quarter turn latch.
- Full swing door using butt hinges.
- Through holes in back for wall mounting.
- Bonding stud is provided on the door and a grounding stud is provided on the box.
- Includes 14 gauge steel inner panel.

Finish

- Enclosure and cover are finished in ANSI 61 gray powder coating.
- Inner panel is finished in white powder coating

	Enclosure			Inner Panel	
Part No.	H	W	D	H	W
N1J664	6.00	6.00	4.00	4.25	4.25
N1J864	8.00	6.00	4.00	6.25	4.25
N1J884	8.00	8.00	4.00	6.25	6.25
N1J1084	10.00	8.00	4.00	8.25	6.25
N1J10104	10.00	10.00	4.00	8.25	8.25
N1J12104	12.00	10.00	4.00	10.25	8.25
N1J12124	12.00	12.00	4.00	10.25	10.25
N1J14124	14.00	12.00	4.00	12.25	10.25
N1J886	8.00	8.00	6.00	6.25	6.25
N1J1086	10.00	8.00	6.00	8.25	6.25
N1J10106	10.00	10.00	6.00	8.25	8.25
N1J12106	12.00	10.00	6.00	10.25	8.25
N1J12126	12.00	12.00	6.00	10.25	10.25
N1J14126	14.00	12.00	6.00	12.25	10.25
N1J16126	16.00	12.00	6.00	14.25	10.25
N1J20126	20.00	12.00	6.00	18.25	10.25
N1J12128	12.00	12.00	8.00	10.25	10.25
N1J14128	14.00	12.00	8.00	12.25	10.25

Accessories

- Additional Inner Panels...*See Page* ***284***
- Perforated Inner Panels...*See Page* ***287***
- Type 1 Lock Kit...*See Page* ***270***

Distributed by Gross Automation | +1 (262) 252-1600. | hammondsales@grossautomation.com

Technical references and CAD downloads available at www.hammondmfg.com

All dimensions in inches unless specified otherwise

© Hammond Manufacturing

Type 1 Mild Steel Wallmount Enclosure *N1A Series*

Hinge Door with Quarter Turn

Quick Link: hammfg.com/N1A

Application

- Designed for indoor use to house controls, instruments and components not requiring oil-tight or dust-tight protection.

Standards

- UL 50 Type 1
- CSA Type 1
- Complies with
  - NEMA Type 1
  - IEC 60529, IP20

Construction

- Enclosure is formed and spot welded from 12 or 14 gauge steel.
- Removable 12 or 14 gauge inner panel is mounted in the rear of the enclosure on collar studs.
- Removable door is mounted on slip hinges.
- Door is fastened with a slotted quarter turn latch; doors 30" and higher are provided with two latches.
- A bonding stud is provided on the door and a grounding stud is provided in the box.
- Mounting holes are provided in the rear of the enclosure.
- Piano hinge on 12 gauge units.

Finish

- Enclosure and door are finished in ANSI 61 gray powder coating.
- Inner panel is finished in white powder coating.

Accessories

- Additional Inner Panels...*See Page* ***285***
- Perforated Inner Panels...*See Page* ***287***
- Type 1 Lock Kit...*See Page* ***270***
- Ventilation...*See Page* ***259***
- Window Kits...*See Page* ***294***
- Padlock Adaptor...*See Page* ***272***

	Enclosure			Inner Panel	
Part No.	H	W	D	H	W
N1A16127	16.00	12.00	7.00	13.00	10.50
N1A16167	16.00	16.00	7.00	13.00	14.50
N1A16207	16.00	20.00	7.00	13.00	18.50
N1A20167	20.00	16.00	7.00	17.00	14.50
N1A20207	20.00	20.00	7.00	17.00	18.50
N1A24167	24.00	16.00	7.00	21.00	14.50
N1A24207	24.00	20.00	7.00	21.00	18.50
N1A24247	24.00	24.00	7.00	21.00	22.50
N1A30207	30.00	20.00	7.00	26.00	18.50
N1A30247	30.00	24.00	7.00	26.00	22.50
N1A36247	36.00	24.00	7.00	32.00	22.50
N1A36307	36.00	30.00	7.00	32.00	28.50
N1A16129	16.00	12.00	9.00	13.00	10.50
N1A20169	20.00	16.00	9.00	17.00	14.50
N1A20209	20.00	20.00	9.00	17.00	18.50
N1A20249	20.00	24.00	9.00	17.00	22.50
N1A24209	24.00	20.00	9.00	21.00	18.50
N1A24249	24.00	24.00	9.00	21.00	22.50
N1A30209	30.00	20.00	9.00	26.00	18.50
N1A30249	30.00	24.00	9.00	26.00	22.50
N1A30309	30.00	30.00	9.00	26.00	28.50
N1A36249	36.00	24.00	9.00	32.00	22.50
N1A36309	36.00	30.00	9.00	32.00	28.50
N1A42249	42.00	24.00	9.00	38.00	22.50
N1A242012	24.00	20.00	12.00	21.00	18.50
N1A242412	24.00	24.00	12.00	21.00	22.50
N1A302412	30.00	24.00	12.00	26.00	22.50
N1A363012	36.00	30.00	12.00	32.00	28.50
N1A423012[1]	42.00	30.00	12.00	38.00	28.50
N1A423612[1]	42.00	36.00	12.00	38.00	34.50
N1A483612[1]	48.00	36.00	12.00	44.00	34.50

[1] 12 gauge construction

Distributed by Gross Automation | +1 (262) 252-1600. | hammondsales@grossautomation.com

Technical references and CAD downloads available at www.hammondmfg.com

All dimensions in inches unless specified otherwise

© Hammond Manufacturing

Type 1 Mild Steel Wallmount Enclosure *1420 Series*

Hinge Door with Quarter Turn and w/ Mounting Flange

Quick Link: hammfg.com/1420

Application

- Designed for indoor use to house controls, instruments and components which do not require oil-tight or dust-tight protection.

Standards

- UL 508A Type 1
- CSA Type 1
- Complies with
  - NEMA Type 1
  - IEC 60529, IP20

Construction

- Enclosure is formed and spot welded from 12 or 14 gauge steel.
- Removable 12 gauge inner panel is mounted to the rear of the enclosure on collar studs.
- Removable door is attached with slip hinges.
- To remove door, a tool is required to remove the #8 screw which captivates hinge.
- Door is fastened with a slotted 1/4 turn latch; doors 30" and higher are provided with two latches.
- A bonding stud is provided on the door and a grounding stud is provided in the box.
- Piano hinge on 12 gauge units.

Finish

- Enclosure and door are finished in ANSI 61 gray powder coating.
- Inner panel is finished in white powder coating.

Accessories

- Additional Inner Panels...*See Page* **283**
- Type 1 Lock Kit...*See Page* **270**
- Ventilation...*See Page* **259**
- Window Kits...*See Page* **294**
- Padlock Adaptor...*See Page* **272**

Part No.	Enclosure H	Enclosure W	Enclosure D	Inner Panel H	Inner Panel W
1420B7	16.00	12.00	7.00	14.00	10.00
1420C7	20.00	16.00	7.00	18.00	14.00
1420D7	20.00	20.00	7.00	18.00	18.00
1420E7	24.00	20.00	7.00	22.00	18.00
1420F7	30.00	20.00	7.00	28.00	18.00
1420G7	30.00	24.00	7.00	28.00	22.00
1420H7	36.00	24.00	7.00	34.00	22.00
1420E9	24.00	20.00	9.00	22.00	18.00
1420EM9	24.00	24.00	9.00	22.00	22.00
1420G9	30.00	24.00	9.00	28.00	22.00
1420H9	36.00	24.00	9.00	34.00	22.00
1420P9[1]	36.00	30.00	9.00	34.00	28.00
1420Q9	42.00	24.00	9.00	40.00	22.00
1420G12	30.00	24.00	12.00	28.00	22.00
1420P12[1]	36.00	30.00	12.00	34.00	28.00
1420R12[1]	42.00	30.00	12.00	40.00	28.00
1420S12[1]	42.00	36.00	12.00	40.00	34.00
1420T12[1]	48.00	36.00	12.00	46.00	34.00
1420G16	30.00	24.00	16.00	28.00	22.00
1420P16[1]	36.00	30.00	16.00	34.00	28.00

[1] 12 gauge construction

Distributed by Gross Automation | +1 (262) 252-1602 | sales@grossautomation.com

Technical references and CAD downloads available at www.hammondmfg.com

All dimensions in inches unless specified otherwise

© Hammond Manufacturing

Type 1 Mild Steel 3 Piece Wallmount Enclosure *N1W S Series*

Hinge Door with Quarter Turn

Quick Link: hammfg.com/N1WS

Application

- Designed for indoor use to enclose controls, instruments, and components which do not require oil-tight or dust-tight protection.
- Ideal for applications where components may be easily mounted and wired prior to installation of wrapper and door.

Standards

- UL 50 Type 1
- CSA Type 1
- Complies with
  - NEMA Type 1
  - IEC 60529, IP20

Construction

- Three piece assembly consisting of a base, wrapper, and door.
- Components are attached and secured with metal screws.
- 14 gauge reverse formed base acts as mounting surface (no separate inner panel) and provides clearance for mounting hardware.
- Wrapper is available in three depths: 4", 6", and 8".
- Wrapper is formed from 16 gauge steel, with no knock-outs in the sides.
- Door assembly formed from 16 gauge steel.
- Removable door is mounted on slip hinges.
- A bonding stud is provided on the door and a grounding screw is provided for the enclosure.
- Door is fastened with a slotted quarter turn latch.

Finish

- Base, wrapper and door are finished in ANSI 61 gray powder coating.

Accessories

- Type 1 Lock Kit...*See Page* ***270***
- Padlock Adaptor...*See Page* ***272***

Part No.	Enclosure H	W	D
N1WS864	8.00	6.00	4.00
N1WS1084	10.00	8.00	4.00
N1WS12104	12.00	10.00	4.00
N1WS16124	16.00	12.00	4.00
N1WS20164	20.00	16.00	4.00
N1WS24204	24.00	20.00	4.00
N1WS866	8.00	6.00	6.00
N1WS1086	10.00	8.00	6.00
N1WS12106	12.00	10.00	6.00
N1WS16126	16.00	12.00	6.00
N1WS20166	20.00	16.00	6.00
N1WS24206	24.00	20.00	6.00
N1WS868	8.00	6.00	8.00
N1WS1088	10.00	8.00	8.00
N1WS12108	12.00	10.00	8.00
N1WS16128	16.00	12.00	8.00
N1WS20168	20.00	16.00	8.00
N1WS24208	24.00	20.00	8.00

Distributed by Gross Automation | +1 (262) 252-1600 | hammondsales@grossautomation.com

Technical references and CAD downloads available at www.hammondmfg.com

All dimensions in inches unless specified otherwise

© Hammond Manufacturing

Type 1 Mild Steel 3 Piece Flushmount Enclosure *N1W F Series*

Hinge Door with Quarter Turn

Quick Link: hammfg.com/N1WF

Application

- Designed for indoor use to enclose controls, instruments, and components which do not require oil-tight or dust-tight protection.
- Ideal for applications where components may be easily mounted and wired prior to installation of wrapper and door.

Standards

- UL 50 Type 1
- CSA Type 1
- Complies with
  - NEMA Type 1
  - IEC 60529, IP20

Construction

- Three piece assembly consisting of a base, wrapper, and door.
- Components are attached and secured with metal screws.
- 14 gauge reverse formed base acts as mounting surface (no separate inner panel) and provides clearance for mounting hardware.
- Punched for left or right hinging of the door and ease of assembly.
- Wrapper is formed from 16 gauge steel, with no knock-outs in the sides.
- Flush mounting door assembly formed from 16 gauge steel.
- Door is fastened with a slotted quarter turn latch.
- A bonding stud is provided on the door and a grounding screw is provided for the enclosure.

Finish

- Base, wrapper and door are finished in ANSI 61 gray powder coating.

Accessories

- Type 1 Lock Kit...*See Page* ***270***
- Padlock Adaptor...*See Page* ***272***

Part No.	Enclosure H	W	D
N1WF864	8.00	6.00	4.00
N1WF1084	10.00	8.00	4.00
N1WF12104	12.00	10.00	4.00
N1WF16124	16.00	12.00	4.00
N1WF20164	20.00	16.00	4.00
N1WF24204	24.00	20.00	4.00

Provided by Gross Automation | +1 (262) 252-1600. | hammondsales@grossautomation.com

Technical references and CAD downloads available at www.hammondmfg.com

All dimensions in inches unless specified otherwise

© Hammond Manufacturing

Type 3R Painted Galvanized Steel Wallmount Enclosure *C3R HCRMD Series*

Continuous Hinge Door with Screws

Quick Link: hammfg.com/C3RHCRMD

Application

- Designed for use as a wiring/junction box.
- Provides protection against rain, sleet, snow and dripping water.

Standards

- UL-50 Type 3R
- CSA Type 3R
  - Complies with
  - NEMA Type 3R
  - IEC 60529, IP24

Construction

- Formed and spot welded from 16 or 14 gauge galvanized steel.
- Drip shield top and seam-free sides, front and back.
- Stainless steel continuous hinge.
- Cover fastened with captive plated screws.
- Padlocking hasp.
- Collar studs provided for mounting optional panels.
- External mounting feet.
- Oil resistant gaskets are permanently secured.

Finish

- Enclosure and cover are finished inside and out in ANSI 61 gray powder coating.

Accessories

- Additional Inner Panels...*See Page* ***281***
- Ventilation...*See Page* ***259***
- Swing Panel Kit...*See Page* ***288***

	Enclosure			Optional Inner Panel		
Part No.	H	W	D	Part Number	H	W
C3R16126HCR	16.00	12.00	6.00	18P1309	13.00	9.00
C3R16166HCR	16.00	16.00	6.00	18P1313	13.00	13.00
C3R18186HCR	18.00	18.00	6.00	18P1515	15.00	15.00
C3R20166HCR	20.00	16.00	6.00	18P1713	17.00	13.00
C3R20208HCR	20.00	20.00	8.00	18P1717	17.00	17.00
C3R24208HCR	24.00	20.00	8.00	18P2117	21.00	17.00
C3R24248HCR	24.00	24.00	8.00	18P2121	21.00	21.00
C3R30248HCR	30.00	24.00	8.00	18P2721	27.00	21.00
C3R30308HCR	30.00	30.00	8.00	18P2727	27.00	27.00
C3R181810HCR	18.00	18.00	10.00	18P1515	15.00	15.00
C3R242410HCR	24.00	24.00	10.00	18P2121	21.00	21.00
C3R302410HCR	30.00	24.00	10.00	18P2721	27.00	21.00
C3R363610HCR	36.00	36.00	10.00	18P3333	33.00	33.00
C3R303012HCR	30.00	30.00	12.00	18P2727	27.00	27.00
C3R362412HCR	36.00	24.00	12.00	18P3321	33.00	21.00
C3R363012HCR	36.00	30.00	12.00	18P3327	33.00	27.00
C3R423012HCR	42.00	30.00	12.00	18P3927	39.00	27.00
C3R363612HCR	36.00	36.00	12.00	18P3333	33.00	33.00
C3R423612HCR	42.00	36.00	12.00	18P3933	39.00	33.00
C3R483612HCR	48.00	36.00	12.00	18P4533	45.00	33.00
C3R603612HCR	60.00	36.00	12.00	18P5733	57.00	33.00
C3R303016HCR	30.00	30.00	16.00	18P2727	27.00	27.00
C3R483616HCR	48.00	36.00	16.00	18P4533	45.00	33.00

Distributed by Gross Automation | +1 (262) 252-1600. | hammondsales@grossautomation.com

Technical references and CAD downloads available at www.hammondmfg.com

All dimensions in inches unless specified otherwise

© Hammond Manufacturing

Type 3R Painted Galvanized Steel Enclosure *C3R HCLO Series*

Lift-Off Hinge Door with Snap Latch

Quick Link: hammfg.com/C3RHCLO

Application

- Designed for use as a wiring/junction box.
- Provides protection against rain, sleet, snow and dripping water.

Standards

- UL-50 Type 3R
- CSA Type 3R
- Complies with
  - NEMA Type 3R
  - IEC 60529, IP24

Construction

- Formed and spot welded from 16 gauge galvanized steel (14 gauge when 24" wide)
- Extended height door and seam-free sides, front and back.
- Galvanized steel lift-off hinges with stainless steel pins.
- Cover fastened securely with zinc plated draw pull catches.
- Provisions for padlocking on zinc-plated draw pull catch.
- Embossed mounting holes on back.
- Seamless poured-in place gasket

Finish

- Enclosure and cover are finished in ANSI 61 gray powder coating.

Accessories

- Additional Inner Panels...*See Page* ***280***
- Additional Inner Panels...*See Page* ***281***
- Swing Panel Kit...*See Page* ***288***

	Enclosure			Optional Inner Panel			Optional Panel	Optional Mount
Part No.	H	W	D	Part No.	H	W	Mounting Kit	Foot Kit
C3R864HCLO	8.00	6.00	4.00	**14R0505**	4.88	4.88	**C3RHCLOPK1**	**C3RHCLOMFK1**
C3R886HCLO	8.00	8.00	6.00	**14R0705**	6.75	4.88	**C3RHCLOPK1**	**C3RHCLOMFK1**
C3R1086HCLO	10.00	8.00	6.00	**14R0707**	6.75	6.88	**C3RHCLOPK1**	**C3RHCLOMFK1**
C3R12106HCLO	12.00	10.00	6.00	**14R0909**	8.75	8.88	**C3RHCLOPK1**	**C3RHCLOMFK1**
C3R12126HCLO	12.00	12.00	6.00	**14R1109**	10.75	8.88	**C3RHCLOPK1**	**C3RHCLOMFK1**
C3R16126HCLO	16.00	12.00	6.00	**14R1311**	12.75	10.88	**C3RHCLOPK1**	**C3RHCLOMFK1**
C3R16166HCLO	16.00	16.00	6.00	**18P1313**	13.00	13.00	**C3RHCLOPK2**	**C3RHCLOMFK2**
C3R20166HCLO	20.00	16.00	6.00	**18P1713**	17.00	13.00	**C3RHCLOPK2**	**C3RHCLOMFK2**
C3R20208HCLO	20.00	20.00	8.00	**18P1717**	17.00	17.00	**C3RHCLOPK2**	**C3RHCLOMFK2**
C3R24208HCLO	24.00	20.00	8.00	**18P2117**	21.00	17.00	**C3RHCLOPK2**	**C3RHCLOMFK2**
C3R24248HCLO	24.00	24.00	8.00	**18P2121**	21.00	21.00	**C3RHCLOPK2**	**C3RHCLOMFK2**
C3R30248HCLO	30.00	24.00	8.00	**18P2721**	27.00	21.00	**C3RHCLOPK2**	**C3RHCLOMFK2**

Distributed by Grossa Automation | +1 (262) 652-1620 | hammondsales@grossaautomation.com

Technical references and CAD downloads available at www.hammondmfg.com

All dimensions in inches unless specified otherwise

© Hammond Manufacturing

Type 1 Mild Steel Component Case *1416 Series*

Ventilated Cover with Screws

Quick Link: hammfg.com/1416

Application

- Designed to provide mechanical protection for components requiring ventilation.
- Suitable for use where heat dissipation is required.

Standards

- Complies with
  - NEMA Type 1

Construction

- Base is formed from 16 gauge steel with two 0.5"/0.75" conduit knockouts located in each end.
- Four .125" high raised dimples with mounting holes are provided on the base.
- Cover is formed from 18 gauge steel with 0.235" x 1.5" ventilating slots (0.199" x 1.12" on E & G only).
- Screw holes and offsets in the cover allow easy assembly.

Finish

- Base and cover are finished in ANSI 61 gray powder coating.

	Enclosure		
Part No.	H	W	D
1416E	6.00	4.00	4.00
1416G	10.00	4.00	4.00
1416I	10.00	6.00	6.00
1416K	11.00	7.00	7.00
1416M	12.00	8.00	8.00
1416O	15.00	10.00	8.00
1416Q	20.00	10.00	8.00
1416T	20.00	10.00	10.00

© Hammond Manufacturing

Climate Control

Air Conditioners - Selection Guide 234

Air-Air Heat Exchangers - Selection Guide 237

Air-Water Heat Exchangers - Selection Guide 239

Water Chillers
EB-RACK Series 241

17-38 CFM Filterfans
PF GEN4 Series
Type 12 242

65 CFM Filterfans
PF GEN4 Series
Type 12 243

94-169 CFM Filterfans
PF GEN4 Series
Type 12 244

297-560 CFM Filterfans
PF GEN4 Series
Type 12 245

152-427 CFM Slimline Filterfans
PF SL GEN4 Series
Type 12 246

Exhaust Filters
PFAG4 Series
4th Generation 247

Replacement Filters
PFFG4 Series
4th Generation 247

266-485 CFM Top Mount Filterfans
PTF GEN4 Series
Type 12 248

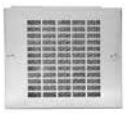
105-550 CFM Filtered Fan Boxes
XF Series 249

Filter Fan Kits
DNFF Series 250

Filter Fan Grills
XPFA Series 251

Filterfan Rainhoods - 3R
RH Series 252

Filterfan Rainhoods - 4/4X
RHN4 Series 253

Rack Mount Fan Tray
FT Series 254

Rack Mount Intake Blowers
HB Series 255

Fan Panel Assembly
PPG Series 255

125-1300 W Fan Heater with Thermostat
FLH Series 256

250-400 W Fan Heater
SHGL Series 256

Distributed by Gross Automation | +1 (262) 252-1600. | hammondsales@grossautomation.com

Technical references and CAD downloads available at www.hammondmfg.com

All dimensions in inches unless specified otherwise

Quality Products. Service Excellence.
© Hammond Manufacturing
Canada: 519.822.2960 or 905.456.3770 USA: 716.630.7030
Data Subject to change without notice

Climate Control

550-650 W High Wattage Fan Heater
SCR Series 257

15-150 W Heater
SHG Series 257

10-30 W Mini Radiant Heaters
SHGM Series 258

100-400 W Control Panel Heater
SHV Series 258

Large Rainproof Ventilator
SDV LG 259

Small Rainproof Ventilator
SDV SM 259

Pressure Compensation Plug
BDN Series 259

Breather Kit
SDA Series 260

Type 3R Louvered Vent Kits
1481L3R Series 261

Type 1 Louvered Ventilating Plates
1481L Series 260

Ventilation Kit Type 4X
SDV N4 261

Thermostats
SKT Series 262

Twin Thermostats
SKTD Series 263

Mechanical Humidistat
SKH Series 263

Humidity and Temperature Control
SKTH Series 264

Condensate Bottle 265

Water Condensate Evaporator
KVD Series 265

Filter Kits
DTSFK Series
For DTS3XXX Series 264

Filter Coat
1475 Series 265

Distributed by Gross Automation | +1 (262) 252-1600. | hammondsales@grossautomation.com

Technical references and CAD downloads available at www.hammondmfg.com

All dimensions in inches unless specified otherwise

© Hammond Manufacturing

Canada: 519.822.2960 or 905.456.3770 USA: 716.630.7030

Data Subject to change without notice

Air Conditioners - Selection Guide

Overview

- Hammond Manufacturing offers an extensive line up of air conditioner solutions.
- Indoor units, Outdoor units and Stainless Steel units to suit your application
- Full technical specifications and cut-out diagrams are available on our website.
- For climate control selection assistance, please utilize our Online Sizing Software.

Quick Link: hammfg.com/AC-SG

Type 12 Side Mount Air Conditioners

Part #	Voltage	BTU (@ 95F/95F)	Protective Rating	Finish	Dimensions H	W	D
DTS3021A115LG	115	1194	NEMA 12/IP54	RAL 7035	15.50	7.00	7.75
DTS3021A230LG	230	1194	NEMA 12/IP54	RAL 7035	15.50	7.00	7.75
DTS3041A115LG	115	2700	NEMA 12/IP54	RAL 7035	20.15	10.05	10.77
DTS3041A230LG	230	2700	NEMA 12/IP54	RAL 7035	20.15	10.05	10.77
DTS3041A460LG	460	2700	NEMA 12/IP54	RAL 7035	20.15	10.05	10.77
DTS3141SLA115LG	115	5097	NEMA 12/IP54	RAL 7035	36.00	12.30	14.40
DTS3141SLA230LG	230	5097	NEMA 12/IP54	RAL 7035	36.00	12.30	14.40
DTS3141SLA460LG	460	5097	NEMA 12/IP54	RAL 7035	36.00	12.30	14.40
DTS3141A115LG	115	4100	NEMA 12/IP54	RAL 7035	29.46	15.55	11.50
DTS3141A230LG	230	4100	NEMA 12/IP54	RAL 7035	29.46	15.55	11.50
DTS3141A460LG	460	4100	NEMA 12/IP54	RAL 7035	29.46	15.55	11.50
DTS3241A115LG	115	6825	NEMA 12/IP54	RAL 7035	47.61	15.55	12.77
DTS3241A230LG	230	6825	NEMA 12/IP54	RAL 7035	47.61	15.55	12.77
DTS3241A460LG	460	6825	NEMA 12/IP54	RAL 7035	47.61	15.55	12.77
DTS3145A115LG	115	6142	NEMA 12/IP54	RAL 7035	36.65	11.89	14.40
DTS3145A230LG	230	6995	NEMA 12/IP54	RAL 7035	36.65	11.89	14.40
DTS3145A460LG	460	6995	NEMA 12/IP54	RAL 7035	36.65	11.89	14.40
DTS3245A115LG	115	11600	NEMA 12/IP54	RAL 7035	53.00	16.00	14.40
DTS3245A230LG	230	11000	NEMA 12/IP54	RAL 7035	53.00	16.00	14.40
DTS3245A460LG	460	12000	NEMA 12/IP54	RAL 7035	53.00	16.00	14.40
DTS3441A230LG	230	17825	NEMA 12/IP54	RAL 7035	56.75	16.00	16.00
DTS3441A460LG	460	17825	NEMA 12/IP54	RAL 7035	56.75	16.00	16.00
DTS3641A230LG	230	20753	NEMA 12/IP54	RAL 7035	65.50	19.00	20.50
DTS3641A460LG	460	19609	NEMA 12/IP54	RAL 7035	65.50	19.00	20.50

For ANSI 61 Gray color, substitute GY in place of LG at end of part number

Distributed by Grossa Automation | +1 (888) 252-1600. | hammondsales@grossautomation.com

Technical references and CAD downloads available at www.hammondmfg.com

All dimensions in inches unless specified otherwise

© Hammond Manufacturing

Air Conditioners - Selection Guide

Type 12 Top Mount Air Conditioners

Part #	Voltage	BTU (@ 95F/95F)	Protective Rating	Finish	Dimensions H	W	D
DTT6101B115LG	115	2250	NEMA 12/IP54	RAL 7035	17.13	23.41	15.55
DTT6101B230LG	230	2300	NEMA 12/IP54	RAL 7035	17.13	23.41	15.55
DTT6201B115LG	115	3500	NEMA 12/IP54	RAL 7035	17.13	23.41	15.55
DTT6201B230LG	230	3680	NEMA 12/IP54	RAL 7035	17.13	23.41	15.55
DTT6201B460LG	460	3500	NEMA 12/IP54	RAL 7035	17.13	23.41	15.55
DTT6301B115LG	115	5520	NEMA 12/IP54	RAL 7035	17.13	23.43	19.49
DTT6301B230LG	230	5520	NEMA 12/IP54	RAL 7035	17.13	23.43	19.49
DTT6301B460LG	460	5520	NEMA 12/IP54	RAL 7035	17.13	23.43	19.49
DTT6401B115LG	115	7160	NEMA 12/IP54	RAL 7035	17.13	23.43	19.49
DTT6401B230LG	230	7160	NEMA 12/IP54	RAL 7035	17.13	23.43	19.49
DTT6401B460LG	460	7160	NEMA 12/IP54	RAL 7035	17.13	23.43	19.49
DTT6601B460LG	460	11000	NEMA 12/IP54	RAL 7035	19.09	31.30	22.64
DTT6801B460LG	460	14500	NEMA 12/IP54	RAL 7035	19.09	31.30	22.60

Type 3R/4 Outdoor Side Mount Air Conditioners

Part #	Voltage	BTU (@ 95F/95F)	Protective Rating	Finish	Dimensions H	W	D
DTS3031A115N3LG	115	1194	NEMA 3R/4/IP56	RAL 7035	15.50	7.00	7.75
DTS3031A230N3LG	230	1194	NEMA 3R/4/IP56	RAL 7035	15.50	7.00	7.75
DTS3061A115N3LG	115	2700	NEMA 3R/4/IP56	RAL 7035	20.15	10.05	10.77
DTS3061A230N3LG	230	2700	NEMA 3R/4/IP56	RAL 7035	20.15	10.05	10.77
DTS3061A460N3LG	460	2700	NEMA 3R/4/IP56	RAL 7035	20.15	10.05	10.77
DTS3161SLA2N3LG	230	5097	NEMA 3R/4/IP56	RAL 7035	36.00	12.30	14.40
DTS3161SLA4N3LG	460	5097	NEMA 3R/4/IP56	RAL 7035	36.00	12.30	14.40
DTS3161A115N3LG	115	4100	NEMA 3R/4/IP56	RAL 7035	29.46	15.55	11.50
DTS3161A230N3LG	230	4100	NEMA 3R/4/IP56	RAL 7035	29.46	15.55	11.50
DTS3161A460N3LG	460	4100	NEMA 3R/4/IP56	RAL 7035	29.46	15.55	11.50
DTS3261A115N3LG	115	6825	NEMA 3R/4/IP56	RAL 7035	47.61	15.55	12.77
DTS3261A230N3LG	230	6825	NEMA 3R/4/IP56	RAL 7035	47.61	15.55	12.77
DTS3261A460N3LG	460	6825	NEMA 3R/4/IP56	RAL 7035	47.61	15.55	12.77
DTS3165A115N3LG	115	6142	NEMA 3R/4/IP56	RAL 7035	36.65	11.89	14.40
DTS3165A230N3LG	230	6995	NEMA 3R/4/IP56	RAL 7035	36.65	11.89	14.40
DTS3165A460N3LG	460	6995	NEMA 3R/4/IP56	RAL 7035	36.65	11.89	14.40
DTS3265A115N3LG	115	11600	NEMA 3R/4/IP56	RAL 7035	53.00	16.00	14.40
DTS3265A230N3LG	230	11000	NEMA 3R/4/IP56	RAL 7035	53.00	16.00	14.40
DTS3265A460N3LG	460	12000	NEMA 3R/4/IP56	RAL 7035	53.00	16.00	14.40
DTS3461A230N3LG	230	17091	NEMA 3R/4/IP56	RAL 7035	56.75	16.00	16.00
DTS3461A460N3LG	460	17091	NEMA 3R/4/IP56	RAL 7035	56.75	16.00	16.00
DTS3661A230N3LG	230	19848	NEMA 3R/4/IP56	RAL 7035	65.50	19.00	20.50
DTS3661A460N3LG	460	20825	NEMA 3R/4/IP56	RAL 7035	65.50	19.00	20.50

For ANSI 61 Gray color, substitute GY in place of LG at end of part number

Distributed by Gross Automation | +1 (262) 252-1600. | hammondsales@grossautomation.com

Technical references and CAD downloads available at www.hammondmfg.com

All dimensions in inches unless specified otherwise

© Hammond Manufacturing

Air Conditioners - Selection Guide

Type 4X Stainless Outdoor Side Mount Air Conditioners

Part #	Voltage	BTU (@ 95F/95F)	Protective Rating	Finish	Dimensions H	W	D
DTS3031A115N4SS	115	1194	NEMA 4X/IP56	#4 304SS	15.50	7.00	7.75
DTS3031A230N4SS	230	1194	NEMA 4X/IP56	#4 304SS	15.50	7.00	7.75
DTS3081A115N4SS	115	2700	NEMA 4X/IP56	#4 304SS	20.15	10.05	10.77
DTS3081A230N4SS	230	2700	NEMA 4X/IP56	#4 304SS	20.15	10.05	10.77
DTS3081A460N4SS	460	2700	NEMA 4X/IP56	#4 304SS	20.15	10.05	10.77
DTS3181SLA2N4SS	230	5097	NEMA 4X/IP56	#4 304SS	36.00	12.30	14.40
DTS3181SLA4N4SS	460	5097	NEMA 4X/IP56	#4 304SS	36.00	12.30	14.40
DTS3181A115N4SS	115	4100	NEMA 4X/IP56	#4 304SS	29.46	15.55	11.50
DTS3181A230N4SS	230	4100	NEMA 4X/IP56	#4 304SS	29.46	15.55	11.50
DTS3181A460N4SS	460	4100	NEMA 4X/IP56	#4 304SS	29.46	15.55	11.50
DTS3281A115N4SS	115	6825	NEMA 4X/IP56	#4 304SS	47.61	15.55	12.77
DTS3281A230N4SS	230	6825	NEMA 4X/IP56	#4 304SS	47.61	15.55	12.77
DTS3281A460N4SS	460	6825	NEMA 4X/IP56	#4 304SS	47.61	15.55	12.77
DTS3185A115N4SS	115	6142	NEMA 4X/IP56	#4 304SS	36.65	11.89	14.40
DTS3185A230N4SS	230	6995	NEMA 4X/IP56	#4 304SS	36.65	11.89	14.40
DTS3185A460N4SS	460	6995	NEMA 4X/IP56	#4 304SS	36.65	11.89	14.40
DTS3285A115N4SS	115	11600	NEMA 4X/IP56	#4 304SS	53.00	16.00	14.40
DTS3285A230N4SS	230	11000	NEMA 4X/IP56	#4 304SS	53.00	16.00	14.40
DTS3285A460N4SS	460	12000	NEMA 4X/IP56	#4 304SS	53.00	16.00	14.40
DTS3481A230N4SS	230	17091	NEMA 4X/IP56	#4 304SS	56.75	16.00	16.00
DTS3481A460N4SS	460	17091	NEMA 4X/IP56	#4 304SS	56.75	16.00	16.00
DTS3681A230N4SS	230	19848	NEMA 4X/IP56	#4 304SS	65.50	19.00	20.50
DTS3681A460N4SS	460	20825	NEMA 4X/IP56	#4 304SS	65.50	19.00	20.50

© Hammond Manufacturing

Air-Air Heat Exchangers - Selection Guide

Overview

- Hammond Manufacturing offers an extensive line up of air to air heat exchanger solutions.
- Indoor units, Outdoor units and Stainless Steel units to suit your application
- Full technical specifications and cut-out diagrams are available on our website.
- For climate control selection assistance, please utilize our Online Sizing Software.

Quick Link: hammfg.com/HXAA-SG

Type 12 Air to Air Heat Exchangers

		Cooling Capacity		Dimensions			Sample Performance
Part No.	Voltage - Frequency	W/°C	W/°F	H	W	D	ΔT = 20°C/36°F
PKS3131A115LG	115V 60 Hz	65	36	35.31	11.97	10.65	1300W (4400BTU)
PKS3131A230LG	230V 50/60 Hz	65	36	35.31	11.97	10.65	1300W (4400BTU)
PKS3131A460LG	400/460V 50/60 Hz	65	36	35.31	11.97	10.65	1300W (4400BTU)
PKS3201A115LG	115V 60 Hz	100	56	35.31	11.97	10.65	2000W (6800BTU)
PKS3201A230LG	230V 50/60 Hz	100	56	35.31	11.97	10.65	2000W (6800BTU)
PKS3201A460LG	400/460V 50/60 Hz	100	56	35.31	11.97	10.65	2000W (6800BTU)
PKS3301A115LG	115V 60 Hz	150	83	35.31	11.97	10.65	3000W (10200BTU)
PKS3301A230LG	230V 50/60 Hz	150	83	35.31	11.97	10.65	3000W (10200BTU)
PKS3301A460LG	400/460V 50/60 Hz	150	83	35.31	11.97	10.65	3000W (10200BTU)
PKS3361A115LG	115V 60 Hz	180	100	35.31	11.97	10.65	3600W (12200BTU)
PKS3361A230LG	230V 50/60 Hz	180	100	35.31	11.97	10.65	3600W (12200BTU)
PKS3361A460LG	400/460V 50/60 Hz	180	100	35.31	11.97	10.65	3600W (12200BTU)

© Hammond Manufacturing

Air-Air Heat Exchangers - Selection Guide

Type 3R/4 Air to Air Heat Exchangers

		Cooling Capacity		Dimensions			Sample Performance
Part No.	Voltage - Frequency	W/°C	W/°F	H	W	D	Δ = 20°C/36°F
PKS3133A115N4LG	115V 60 Hz	65	36	35.30	11.97	16.04	1300W (4400BTU)
PKS3133A230N4LG	230V 50/60 Hz	65	36	35.30	11.97	16.04	1300W (4400BTU)
PKS3133A460N4LG	400/460V 50/60 Hz	65	36	35.30	11.97	16.04	1300W (4400BTU)
PKS3203A115N4LG	115V 60 Hz	100	56	35.30	11.97	16.04	2000W (6800BTU)
PKS3203A230N4LG	230V 50/60 Hz	100	56	35.30	11.97	16.04	2000W (6800BTU)
PKS3203A460N4LG	400/460V 50/60 Hz	100	56	35.30	11.97	16.04	2000W (6800BTU)
PKS3303A115N4LG	115V 60 Hz	150	83	35.30	11.97	16.04	3000W (10200BTU)
PKS3303A230N4LG	230V 50/60 Hz	150	83	35.30	11.97	16.04	3000W (10200BTU)
PKS3303A460N4LG	400/460V 50/60 Hz	150	83	35.30	11.97	16.04	3000W (10200BTU)
PKS3363A115N4LG	115V 60 Hz	180	100	35.30	11.97	16.04	3600W (12200BTU)
PKS3363A230N4LG	230V 50/60 Hz	180	100	35.30	11.97	16.04	3600W (12200BTU)
PKS3363A460N4LG	400/460V 50/60 Hz	180	100	35.30	11.97	16.04	3600W (12200BTU)

Type 4X Stainless Air to Air Heat Exchangers

		Cooling Capacity		Dimensions			Sample Performance
Part No.	Voltage - Frequency	W/°C	W/°F	H	W	D	Δ = 20°C/36°F
PKS3134A115N4SS	115V 60 Hz	65	36	35.30	11.97	16.04	1300W (4400BTU)
PKS3134A230N4SS	230V 50/60 Hz	65	36	35.30	11.97	16.04	1300W (4400BTU)
PKS3134A460N4SS	400/460V 50/60 Hz	65	36	35.30	11.97	16.04	1300W (4400BTU)
PKS3204A115N4SS	115V 60 Hz	100	56	35.30	11.97	16.04	2000W (6800BTU)
PKS3204A230N4SS	230V 50/60 Hz	100	56	35.30	11.97	16.04	2000W (6800BTU)
PKS3204A460N4SS	400/460V 50/60 Hz	100	56	35.30	11.97	16.04	2000W (6800BTU)
PKS3304A115N4SS	115V 60 Hz	150	83	35.30	11.97	16.04	3000W (10200BTU)
PKS3304A230N4SS	230V 50/60 Hz	150	83	35.30	11.97	16.04	3000W (10200BTU)
PKS3304A460N4SS	400/460V 50/60 Hz	150	83	35.30	11.97	16.04	3000W (10200BTU)
PKS3364A115N4SS	115V 60 Hz	180	100	35.30	11.97	16.04	3600W (12200BTU)
PKS3364A230N4SS	230V 50/60 Hz	180	100	35.30	11.97	16.04	3600W (12200BTU)
PKS3364A460N4SS	400/460V 50/60 Hz	180	100	35.30	11.97	16.04	3600W (12200BTU)

Mini Type 4X Stainless Air to Air Heat Exchangers

		Cooling Capacity		Dimensions			Sample Performance
Part No.	Voltage - Frequency	W/°C	W/°F	H	W	D	Δ = 20°C/36°F
PKS3042A115N4SS	115V 60 Hz	22	12	12.00	12.00	7.89	440W (1400BTU)
PKS3092A115N4SS	115V 60 Hz	45	25	22.75	12.00	7.89	900W (3000BTU)

Distributed by Gross Automation | +1 (262) 252-1600. | hammondsales@grossautomation.com

Technical references and CAD downloads available at www.hammondmfg.com

All dimensions in inches unless specified otherwise

Quality Products. Service Excellence.
© Hammond Manufacturing
Canada: 519.822.2960 or 905.456.3770 USA: 716.630.7030
Data Subject to change without notice

Air-Water Heat Exchangers - Selection Guide

- Hammond Manufacturing offers an extensive line up of air to water heat exchanger solutions.
- If there is a source of cool water available, these can provide a very economical cooling solution. Hammond also offers chillers to supply cold water if needed.
- Indoor/Outdoor and Stainless Steel units to suit your application
- Full technical specifications and cut-out diagrams are available on our website.
- For climate control selection assistance, please utilize our Online Sizing Software.

Quick Link: hammfg.com/HXAW-SG

Type 3R/4 Air to Water Heat Exchangers

Part #	Voltage	Cooling Capacity (BTU) (Air/Water ΔT = 45°F/25°C)	Protective Rating	Finish	Dimensions H	W	D
PWS7102A115N4LG	115	3242	NEMA 3R/4	RAL 7035	19.68	7.88	5.55
PWS7102A230N4LG	230	3242	NEMA 3R/4	RAL 7035	19.68	7.88	5.55
PWS3062A115N4LG	115	2216	NEMA 3R/4	RAL 7035	24.10	10.13	5.62
PWS3062A230N4LG	230	2216	NEMA 3R/4	RAL 7035	24.10	10.13	5.62
PWS7332A115N4LG	115	2898	NEMA 3R/4	RAL 7035	24.10	10.13	5.62
PWS7332A230N4LG	230	2898	NEMA 3R/4	RAL 7035	24.10	10.13	5.62
PWS3102A115N4LG	115	3753	NEMA 3R/4	RAL 7035	32.05	15.80	6.28
PWS3102A230N4LG	230	3753	NEMA 3R/4	RAL 7035	32.05	15.80	6.28
PWS3152A115N4LG	115	5800	NEMA 3R/4	RAL 7035	36.65	11.78	8.11
PWS3152A230N4LG	230	5800	NEMA 3R/4	RAL 7035	36.65	11.78	8.11
PWS3202A115N4LG	115	7165	NEMA 3R/4	RAL 7035	51.89	15.76	9.07
PWS3202A230N4LG	230	7165	NEMA 3R/4	RAL 7035	51.89	15.76	9.07
PWS7332A115N4LG	115	10748	NEMA 3R/4	RAL 7035	37.40	15.75	7.56
PWS7332A230N4LG	230	10748	NEMA 3R/4	RAL 7035	37.40	15.75	7.56
PWS3302A115N4LG	115	12283	NEMA 3R/4	RAL 7035	51.89	15.76	9.07
PWS3302A230N4LG	230	12283	NEMA 3R/4	RAL 7035	51.89	15.76	9.07
PWS3502A115N4LG	115	21496	NEMA 3R/4	RAL 7035	57.09	15.76	8.60
PWS3502A230N4LG	230	21496	NEMA 3R/4	RAL 7035	57.09	15.76	8.60
PWS31X2A230N4LG	230	34121	NEMA 3R/4	RAL 7035	65.52	19.75	12.10

© Hammond Manufacturing

Air-Water Heat Exchangers - Selection Guide

Type 4X Stainless Air to Water Heat Exchangers

Part #	Voltage	Cooling Capacity (BTU) (Air/Water ΔT = 45°F/25°C)	Protective Rating	Finish	Dimensions H	W	D
PWS7102A115N4SS	115	3242	NEMA 4X	#4 304SS	19.68	7.88	5.55
PWS7102A230N4SS	230	3242	NEMA 4X	#4 304SS	19.68	7.88	5.55
PWS3062A115N4SS	115	2216	NEMA 4X	#4 304SS	24.10	10.13	5.62
PWS3062A230N4SS	230	2216	NEMA 4X	#4 304SS	24.10	10.13	5.62
PWS7332A115N4SS	115	2898	NEMA 4X	#4 304SS	24.10	10.13	5.62
PWS7332A230N4SS	230	2898	NEMA 4X	#4 304SS	24.10	10.13	5.62
PWS3102A115N4SS	115	3753	NEMA 4X	#4 304SS	32.05	15.80	6.28
PWS3102A230N4SS	230	3753	NEMA 4X	#4 304SS	32.05	15.80	6.28
PWS3152A115N4SS	115	5800	NEMA 4X	#4 304SS	36.65	11.78	8.11
PWS3152A230N4SS	230	5800	NEMA 4X	#4 304SS	36.65	11.78	8.11
PWS3202A115N4SS	115	7165	NEMA 4X	#4 304SS	51.89	15.76	9.07
PWS3202A230N4SS	230	7165	NEMA 4X	#4 304SS	51.89	15.76	9.07
PWS7332A115N4SS	115	10748	NEMA 4X	#4 304SS	37.40	15.75	7.56
PWS7332A230N4SS	230	10748	NEMA 4X	#4 304SS	37.40	15.75	7.56
PWS3302A115N4SS	115	12283	NEMA 4X	#4 304SS	51.89	15.76	9.07
PWS3302A230N4SS	230	12283	NEMA 4X	#4 304SS	51.89	15.76	9.07
PWS3502A115N4SS	115	21496	NEMA 4X	#4 304SS	57.09	15.76	8.60
PWS3502A230N4SS	230	21496	NEMA 4X	#4 304SS	57.09	15.76	8.60
PWS31X2A460N4SS	460	34121	NEMA 4X	#4 304SS	65.52	19.75	12.10

Distributed by Gross Automation | +1 (262) 252-1600. | hammondsales@grossautomation.com

Technical references and CAD downloads available at www.hammondmfg.com

All dimensions in inches unless specified otherwise

Quality Products. Service Excellence.
© Hammond Manufacturing
Canada: 519.822.2960 or 905.456.3770 USA: 716.630.7030
Data Subject to change without notice

Water Chillers *EB-RACK Series*

Quick Link: hammfg.com/EB-RACK

Description

- Designed to provide recirculated coolant for most industrial applications air/water heat exchangers, process cooling, machine hydraulics or motor cooling.

Standards

- CC Series –UL,cUL,(ETL), CE
- EB30-150 WT Series –UL,cUL,(ETL), CE

Features

- Pre-engineered packaged design includes refrigeration, cooling tank & pump and operating controls for plug and play operation
- CC Series compact design for cooling capacities up to 23,000 BTU/H
- EB Series for cooling capacities 16,000 to 67,000 BTU/H
- Both series are suitable for indoor and outdoor installations
- Exterior case, galvanized steel frame coated with RAL7035 finish
- Larger sizes and High Temperature units also available

Options

- Hydraulic coolant by-pass kit
- Casters
- Remote control pad
- RS-485 Communication Hardware (Modbus)

Model Number	Enviromental Rating	Cooling Capacity Ambient +90F(+32C) Water +64F(+18C)	Voltage AC 60 Hz	Pump Flow Rate GPM (l/h)	Tank Capacity Gallons (Litres)	Coolant Connectios (NPT-F)	Dimensions inches Height	Width	Depth
CC6101	Indoor / Outdoor	4056 BTU/H (1190 Watts)	115 or 230	0.9 (204 l/h)	2.7 (10L)	1/2	24.60	23.60	18.90
CC6201	Indoor / Outdoor	6551 BTU/H (1920 Watts)	115 or 230	1.3 (295 l/h)	2.7 (10L)	1/2	24.60	23.60	18.90
CC6301	Indoor / Outdoor	9144 BTU/H (2676 Watts)	115 or 230	2.0 (452 l/h)	2.7 (10L)	1/2	24.60	23.60	18.90
CC6401	Indoor / Outdoor	13,268 BTU/H (3883 Watts)	460 3 Phase	2.7 (613 l/h)	6.8 (26L)	3/4	38.70	23.60	26.40
CC6501	Indoor / Outdoor	19,960 BTU/H (5841 Watts)	460 3 Phase	3.8 (863 l/h)	6.8 (26L)	3/4	38.70	23.60	26.40
CC6601	Indoor / Outdoor	23,100 BTU/H (6768 Watts)	460 3 Phase	4.9 (1113 l/h	6.8 (26L)	3/4	38.70	23.60	26.40
EB30WT	Indoor / Outdoor	16,700 BTU/H (4887 Watts)	460 3 Phase	3.3 (750 l/h)	8.0 (30L)	3/4	42.00	22.00	24.00
EB60WT	Indoor / Outdoor	21,800 BTU/H (6380 Watts)	460 3 Phase	4.4 (1000 l/h)	8.0 (30L)	3/4	42.00	22.00	24.00
EB90WT	Indoor / Outdoor	43,000 BTU/H (12584 Watts)	460 3 Phase	8.8 (1953 l/h)	13.2 (50L)	1	55.00	28.00	30.00
EB150WT	Indoor / Outdoor	67,500 BTU/H (19754 Watts)	460 3 Phase	13.5 (3066 l/h)	13.2 (50L)	1	55.00	28.00	30.00

© Hammond Manufacturing

17-38 CFM Filterfans *PF GEN4 Series*

Type 12

Features

- Maintains a UL Tested NEMA Type 12 seal against enclosure
- UL Recognized to UL 508A, category NITW2/8, UL File #E175229
- Patented “Click & Fit” design provides a hardware free installation!
- Plastic made from strong, heat resistant (ABS-FR), UL 94 VO fire approved material
- Fan motor is CSA approved
- Options: Black grills

Accessories

- Exhaust Filters...*See Page* ***247***
- Replacement Filters...*See Page* ***247***
- Filterfan Rainhoods - 4/4X...*See Page* ***253***
- Filterfan Rainhoods - 3R...*See Page* ***252***

Quick Link: hammfg.com/PF11

Part Number Light Gray RAL7035	Part Number Black RAL 9011	Voltage	Power	Exhaust Filter Light Gray RAL7035	Exhaust Filter Black RAL9011
PF11000T12LG	**PF11000T12BK**	115V	11W	**PFA10000LG**	**PFA10000BK**
PF11000T12LG230	**PF11000T12BK230**	230V	11W	**PFA10000LG**	**PFA10000BK**
PF11000T12LG24	**PF11000T12BK24**	24V	2W	**PFA10000LG**	**PFA10000BK**
PF22000T12LG	**PF22000T12BK**	115V	20W	**PFA20000LG**	**PFA20000BK**
PF22000T12LG230	**PF22000T12BK230**	230V	18W	**PFA20000LG**	**PFA20000BK**
PF22000T12LG24	**PF22000T12BK24**	24V	5W	**PFA20000LG**	**PFA20000BK**

Airflow data	PF 11000	PF 22000	PFA 1-20000
Filter material	Type 12 filter mat	Type 12 filter mat	Type 12 filter mat
Unimpeded airflow	17 CFM	38 CFM	-
Capacity free-flow	10 W/K	21 W/K	-
Airflow in combination	11 CFM	28 CFM	-
(Filterfan + Exhaust Filter)	(PF 11000 + PFA 10000)	(PF 22000 + PFA 20000)	-
Capacity in combination	6 W/K	15 W/K	-
(Filterfan + Exhaust Filter)	(PF 11000 + PFA 10000)	(PF 22000 + PFA 20000)	-
Max. static pressure (Airflow = 0 m3/h)	38 Pa	57 Pa	-
Filtration efficiency	0.88	0.91	88/91%
Filter material grade	G 3 (DIN EN 779)	G 4 (DIN EN 779)	G3/ G4 (DIN EN 779)
Duty cycle	1	1	-

Technical data	PF 11000 AC	PF 11000 DC	PF 22000 AC	PF 22000 DC	PFA 10000 PFA 20000
Outside dimensions in mm (height x width x installation depth)	109 x 109 x 62	109 x 109 x 49	145 x 145 x 70	145 x 145 x 64	109 x 109 x 26/ 145 x 145 x 26
Bearing type	sleeve bearings	ball bearings	sleeve bearings	ball bearings	-
Fitting position	vertical	any	vertical	any	-
Construction	housing and guard of sprayed thermoplastic, self-extinguishing, UL 94 VO				
Weight	0.55 kg	0.16 kg	0.7 kg	0.44 kg	0.06 kg / 0.12 kg
Safety protection	in accordance with DIN 31 001				
Color LG	RAL 7035, Light Grey				
Color BK	RAL 9011 Black				
Connection	2 wires, 310 mm long		terminal strip	2 wires, 310 mm long	
System of protection	NEMA Type 12, IP 55 (EN 60 529) when installed as specified				

Distributed by Gross Automation | [illegible] | (877) 477-6769 | (877) 477-6769 | sales@grossautomation.com

Technical references and CAD downloads available at www.hammondmfg.com

All dimensions in inches unless specified otherwise

© Hammond Manufacturing

65 CFM Filterfans *PF GEN4 Series*

Type 12

Features

- Maintains a UL Tested NEMA Type 12 seal against enclosure
- UL Recognized to UL 508A, category NITW2/8, UL File #E175229
- Patented “Click & Fit” design provides a hardware free installation!
- Plastic made from strong, heat resistant (ABS-FR), UL 94 VO fire approved material
- Fan Motor is CSA Approved
- Options: Black Grills

Accessories

- Exhaust Filters...*See Page* ***247***
- Replacement Filters...*See Page* ***247***
- Filterfan Rainhoods - 4/4X...*See Page* ***253***
- Filterfan Rainhoods - 3R...*See Page* ***252***

Quick Link: hammfg.com/PF32

Part Number Light Gray RAL7035	Part Number Black RAL9011	Voltage	Power	Exhaust Filter Light Gray RAL7035	Exhaust Filter Black RAL9011
PF32000T12LG	**PF32000T12BK**	115V	20W	**PFA30000LG**	**PFA30000BK**
PF32000T12LG230	**PF32000T12BK230**	230V	18W	**PFA30000LG**	**PFA30000BK**
PF32000T12LG24	**PF32000T12BK24**	24V	5W	**PFA30000LG**	**PFA30000BK**

Airflow data	PF 32000	PFA 30000
Filter material	Type 12 filter mat	Type 12 filter mat
Unimpeded airflow	65 CFM	-
Capacity free-flow	37 W/K	-
Airflow in combination	38 CFM	-
(Filterfan + Exhaust Filter)	(PF 32000 + PFA 30000)	-
Capacity in combination	21 W/K	-
(Filterfan + Exhaust Filter)	(PF 32000 + PFA 30000)	-
Max. static pressure (Airflow = 0 m3/h)	61 Pa	-
Filtration efficiency	0.91	-
Filter material grade	G 4 (DIN EN 779)	G 4 (DIN EN 779)
Duty cycle	1	-

Technical data	PF 32000 AC	PF 32000 DC	PFA 30000
Outside dimensions in mm	202 x 202 x 87	202 x 202 x 81	202 x 202 x 34
(height x width x installation depth)			
Bearing type	sleeve bearings	ball bearings	-
Fitting position	vertical	any	any
Construction	housing and guard of sprayed thermoplastic, self-extinguishing, UL 94 VO		
Weight	0.87 kg	0.61 kg	0.26 kg
Safety protection	in accordance with DIN 31 001		-
Color LG	RAL 7035, Light Grey		
Color BK	RAL9011 Black		
Connections	terminal strip	2 wires, 310mm long	-

Distributed by Gross Automation | 1 (262) 252-1600. | hammondsales@grossautomation.com

Technical references and CAD downloads available at www.hammondmfg.com

All dimensions in inches unless specified otherwise

© Hammond Manufacturing

94-169 CFM Filterfans *PF GEN4 Series*

Type 12

Features

- Maintains a UL Tested NEMA Type 12 seal against enclosure
- UL Recognized to UL 508A, category NITW2/8, UL File #E175229
- Patented “Click & Fit” design provides a hardware free installation!
- Plastic made from strong, heat resistant (ABS-FR), UL 94 VO fire approved material
- Fan Motor is CSA Approved
- Options: Black Grills

Accessories

- Exhaust Filters...*See Page* ***247***
- Replacement Filters...*See Page* ***247***
- Filterfan Rainhoods - 4/4X...*See Page* ***253***
- Filterfan Rainhoods - 3R...*See Page* ***252***

Quick Link: hammfg.com/PF45

Part Number Light Gray RAL7035	Part Number Black RAL9011	Voltage	Power	Exhaust Filter Light Gray RAL7035	Exhaust Filter Black RAL9011
PF42500T12LG	**PF42500T12BK**	115V	20W	**PFA40000LG**	**PFA40000BK**
PF42500T12LG230	**PF42500T12BK230**	230V	18W	**PFA40000LG**	**PFA40000BK**
PF42500T12LG24	**PF42500T12BK24**	24V	5W	**PFA40000LG**	**PFA40000BK**
PF43000T12LG	**PF43000T12BK**	115V	40W	**PFA40000LG**	**PFA40000BK**
PF43000T12LG230	**PF43000T12BK230**	230V	39W	**PFA40000LG**	**PFA40000BK**
PF43000T12LG24	**PF43000T12BK24**	24V	12W	**PFA40000LG**	**PFA40000BK**

Airflow data	PF 42500	PF 43000	PFA 40000
Filter material	NEMA Type 12 Filtermat	NEMA Type 12 Filtermat	NEMA Type 12 Filtermat
Unimpeded airflow	94 CFM	169 CFM	-
Capacity free-flow	53 W/K	I88 W/K	-
Airflow in combination	67 CFM	142 CFM	-
(Filterfan + Exhaust Filter)	(PF 42500 + PFA 40000)	(PF 43000 + PFA 40000)	-
Capacity in combination	38 W/K	69 W/K	-
(Filterfan + Exhaust Filter)	(PF 43000 + PFA 40000)	(PF 43000 + PFA 40000)	-
Max. static pressure (Airflow = 0 m3/h)	49 Pa	112 Pa	-
Filtration efficiency	0.91	0.91	0.91
Filter material grade	G 4 (DIN EN 779)	G 4 (DIN EN 779)	G 4 (DIN EN 779)
Duty cycle	1	1	-

Technical data	PF 42500 AC/DC	PF 43000 AC/DC	PFA 40000
Outside dimensions in mm	252 x 252 x 97	252 x 252 x 113	252 x 252 x 38
(height x width x installation depth)			
Bearing type / Lagerart	ball bearings		-
Fitting position / Einbaulage	any, horizontal airflow preferred		any
Construction	housing and guard of sprayed thermoplastic, self-extinguishing, UL 94 VO		
Weight	1.18 kg	1.67 kg	0.46 kg
Safety protection	in accordance with DIN 31 001		
Color LG	RAL 7035, Light Grey		
Color BK	RAL9011 Black		
Connections / Anschlussart	cage clamp	cage clamp	-

Distributed by Gross Automation | +1 (262) 252-1600. | hammond@grossautomation.com

Technical references and CAD downloads available at www.hammondmfg.com

All dimensions in inches unless specified otherwise

© Hammond Manufacturing

297-560 CFM Filterfans *PF GEN4 Series*

Type 12

Features

- Maintains a UL Tested NEMA Type 12 seal against enclosure
- UL Recognized to UL 508A, category NITW2/8, UL File #E175229
- Patented “Click & Fit” design provides a hardware free installation!
- Plastic made from strong, heat resistant (ABS-FR), UL 94 VO fire approved material
- Fan Motor is CSA Approved
- Options: Black Grills

Accessories

- Exhaust Filters...*See Page* ***247***
- Replacement Filters...*See Page* ***247***
- Filterfan Rainhoods - 4/4X...*See Page* ***253***
- Filterfan Rainhoods - 3R...*See Page* ***252***

Quick Link: hammfg.com/PF65

Part Number Light Gray RAL 7035	Part Number Black RAL9011	Voltage	Power	Exhaust Filter Light Gray RAL7035	Exhaust Filter Black RAL9011
PF65000T12LG	**PF65000T12BK**	115V	90W	**PFA60000LG**	**PFA60000BK**
PF65000T12LG230	**PF65000T12BK230**	230V	80W	**PFA60000LG**	**PFA60000BK**
PF66000T12LG	**PF66000T12BK**	115V	160W	**PFA60000LG**	**PFA60000BK**
PF66000T12LG230	**PF66000T12BK230**	230V	155W	**PFA60000LG**	**PFA60000BK**
PF67000T12LG	**PF67000T12BK**	115V	195W	**PFA60000LG**	**PFA60000BK**
PF67000T12LG230	**PF67000T12BK230**	230V	170W	**PFA60000LG**	**PFA60000BK**

Airflow data	PF 65000	PF 66000	PF 67000	PFA 60000
Filter material	Type 12 Filtermat	Type 12 Filtermat	Type 12 Filtermat	Type 12 Filtermat
Unimpeded airflow	297 CFM	462 CFM	560 CFM	-
Capacity free-flow	IP 54: 160 W/K / 160 W/K	IP 54: 213 W/K / 218 W/K	IP 54: 282 W/K / 292 W/K	-
	IP 55: 168 W/K / 168 W/K	IP 55: 257 W/K / 262 W/K	IP 55: 308 W/K / 317 W/K	-
Airflow in combination	230 CFM	295 CFM	368 CFM	-
(Filterfan + Exhaust Filter)	(PF 65000 + PFA 60000)	(PF 66000 + PFA 60000)	(PF 67000 + PFA 60000)	-
Capacity in combination	127 W/K	167 W/K	208 W/K	-
(Filterfan + Exhaust Filter)	(PF 65000 + PFA 60000)	(PF 66000 + PFA 60000)	(PF 67000 + PFA 60000)	-
Max. static pressure (Airflow = 0)	74 Pa	134 Pa	187 Pa	-
Filtration efficiency	0.91	0.91	0.91	0.91
Filter material grade	G 4 (DIN EN 779)	G 4 (DIN EN 779)	G 4 (DIN EN 779)	G 4 (DIN EN 779)
Duty cycle	1	1	1	-

Technical data	PF 65000	PF 66000	PF 67000	PFA 60000
Outside dimensions in mm (height x width x installation depth)	320 x 320 x 150	320 x 320 x 150	320 x 320 x 150	320 x 320 x 39
Bearing type	ball bearings	ball bearings	ball bearings	-
Fitting position	any, horizontal airflow preferred		any	-
Construction	housing and guard of sprayed thermoplastic, self-extinguishing, UL 94 VO			
Weight	3.2 kg	3.2 kg	3.7 kg	0.7 kg
Safety protection	in accordance with DIN 31 001			-
Color	RAL 7035, Light Grey			
Connections	cage clamp	cage clamp	cage clamp	-

Distributed by Jesse Automation | +1 (262) 338-1800 | hammondsales@gojesse.com

Technical references and CAD downloads available at www.hammondmfg.com

All dimensions in inches unless specified otherwise

© Hammond Manufacturing

Canada: 519.822.2960 or 905.456.3770 USA: 716.630.7030

Data Subject to change without notice

152-427 CFM Slimline Filterfans *PF SL GEN4 Series*

Type 12

Quick Link: hammfg.com/PF33SL

Features

- Low installation depth
- Maintains a UL Tested NEMA Type 12 seal against enclosure
- UL Recognized to UL 508A, category NITW2/8,
- UL File #E175229
- CSA #246217
- Patented "Click & Fit" design provides a hardware-free installation!
- Plastic made from strong, heat resistant
- (ABS-FR), UL 94 VO fire approved material
- Options: Black Grills, Reverse Flow Exhaust

Accessories

- Exhaust Filters...*See Page* ***247***
- Replacement Filters...*See Page* ***247***
- Filterfan Rainhoods - 4/4X...*See Page* ***253***
- Filterfan Rainhoods - 3R...*See Page* ***252***

Part No. Light Gray RAL7035	Part No. Black RAL9011	Voltage	Power	Exhaust Filter Light Gray RAL7035	Exhaust Filter Black Grill RAL9011
PF33000T12LGSL	**PF33000T12BKSL**	115V	20W	**PFA30000LG**	**PFA30000BK**
PF33000T12LGSL2	**PF33000T12BKSL2**	230V	19W	**PFA30000LG**	**PFA30000BK**
PF330DCT12LGSL2	**PF330DCT12BKSL2**	24V DC	5W	**PFA30000LG**	**PFA30000BK**
PF65000T12LGSL	**PF65000T12BKSL**	115V	80W	**PFA60000LG**	**PFA60000BK**
PF65000T12LGSL2	**PF65000T12BKSL2**	230V	80W	**PFA60000LG**	**PFA60000BK**
PF67000T12LGSL	**PF67000T12BKSL**	115V	120W	**PFA60000LG**	**PFA60000BK**
PF67000T12LGSL2	**PF67000T12BKSL2**	230V	127W	**PFA60000LG**	**PFA60000BK**
PF67000T12LGSL4	**PF67000T12BKSL4**	400V/460V	110W	**PFA60000LG**	**PFA60000BK**

Airflow data	PF 33000 SL	PF 65000 SL	PF 67000 SL
Filter material	Type 12 Filtermat	Type 12 Filtermat	Type 12 Filtermat
Unimpeded airflow	152 CFM	325 CFM	427 CFM
Cooling Dissipation (W)/°T	168 W/K	262 W/K	317 W/K
Airfl ow in combination	115 CFM	250 CFM	342 CFM
(Filterfan + Exhaust Filter)	(PF 33000 + PFA 30000)	(PF 65000 + PFA 60000)	(PF 67000 + PFA 60000)
Capacity in combination	127 W/K	167 W/K	208 W/K
(Filterfan + Exhaust Filter)	(PF 33000 + PFA 30000)	(PF 65000 + PFA 60000)	(PF 67000 + PFA 60000)
Max. static pressure (Airfl ow = 0)	74 Pa	134 Pa	187 Pa
Filtration effi ciency	0.91	0.91	0.91
Filter material grade	G 4 (DIN EN 779)	G 4 (DIN EN 779)	G 4 (DIN EN 779)
Duty cycle	1	1	1

Technical data	PF 33000SL	PF 65000SL	PF 67000SL
Outside dimensions in mm (height x width x installation depth)	202 x 202 x 87	320 x 320 x 124	320 x 320 x 127
Cut Out Dimension	177 x 177	291 x 291	291 x 291
Bearing type	ball bearings		
Fitting position	any, horizontal airflow preferred		
Construction	housing and guard of sprayed thermoplastic, self-extinguishing, UL 94 VO		
Weight	3.2 kg	3.2 kg	3.7 kg
Safety protection	in accordance with DIN 31 001		
Color	RAL 7035, Light Grey		
Connections	cage clamp		
Approval	NEMA Type 12, IP 55 (EN 60 529), when installed as specified		

Distributed by Gross Automation | +1 (262) 252-1600 | hammondsales@grossautomation.com

Technical references and CAD downloads available at www.hammondmfg.com

All dimensions in inches unless specified otherwise

© Hammond Manufacturing

Exhaust Filters

4th Generation

- Maintains a UL Tested NEMA Type 12 seal against enclosure
- UL Recognized to UL 508A, category NITW2/8, UL File #E175229
- CSA #246217
- Patented “Click & Fit” design provides a hardware-free installation
- Plastic made from strong, heat resistant (ABS-FR) UL 94 VO fire approved material

Part Number Light Gray (RAL7035)	Part Number Black (RAL9011)	Filtration Efficiency %
PFA10000LG	**PFA10000BK**	88
PFA20000LG	**PFA20000BK**	91
PFA30000LG	**PFA30000BK**	91
PFA40000LG	**PFA40000BK**	91
PFA60000LG	**PFA60000BK**	91

Replacement Filters

4th Generation

PFF Series Replacement Filters

- For PF Series Filter Fans
- Special patent pending fluted filter design increases the time between maintenance by 3X
- Allows for greater CFM in dirty environments
- Sold in Packs of 5

PFFT Series Replacement Filters

- For PTF Series Top Mount Filter Fans
- Standard synthetic fiber filter
- Sold in Packs of 5
  - Note: Top mount filter fan units have 4 separate filters per unit - replacement packs (PFFT Series) contain 20 individual filters which will service 5 top mount fan units

Part Number	Use with 4th Gen FF
PFF10000*	PF/PFA 1XXXX
PFF20000	PF/PFA 2XXXX
PFF30000	PF/PFA 3XXXX
PFF40000	PF/PFA 4XXXX
PFF60000	PF/PFA 6XXXX
PFFT60001	PTF60500/PTFA60500
PFFT60002	PTF60700/61000

*Standard synthetic fiber filter.

© Hammond Manufacturing

266-485 CFM Top Mount Filterfans *PTF GEN4 Series*

Type 12

Features

- Maintains a NEMA 12 seal against enclosure
- UL Recognized to UL 508A, category NITW2/8, UL File #E175229
- Patented “Click & Fit” design provides a hardware free installation!
- Metal Pagoda Cover for rugged environments, easily painted to match machine color
- Fan Motor is CSA Approved

Accessories

- Exhaust Filters...*See Page* ***247***
- Replacement Filters...*See Page* ***247***

Quick Link: hammfg.com/PTF60

Part Number	Voltage	Power	H	W	D	Installed Depth	Mating Exhaust Filter
PTF60500LG	115V	24W	4.92	16.93	16.93	1.97	**PFA60000LG**
PTF60500LG230	230V	24W	4.92	16.93	16.93	1.97	**PFA60000LG**
PTF60700LG	115V	90W	5.51	18.50	18.50	1.97	**PFA60000LG**
PTF60700LG230	230V	80W	5.51	18.50	18.50	1.97	**PFA60000LG**
PTF61000LG	115V	170W	5.51	18.50	18.50	1.97	**PFA60000LG**
PTF61000LG230	230V	150W	5.51	18.50	18.50	1.97	**PFA60000LG**

Airflow data	PTF 60500	PTF 60700	PTF 61000	PTFA 60000
Filter material	NEMA 12 Filtermat	NEMA 12 Filtermat	NEMA 12 Filtermat	NEMA 12 Filtermat
Unimpeded airflow	226 CFM	356 CFM	485 CFM	-
Capacity free-flow	113 W/K	177 W/K	242 W/K	-
Airflow in combination	149 CFM	227 CFM	304 CFM	-
(Filterfan + Exhaust Filter)	(PTF 60500 + PFA 60000)	(PTF 60700 + PFA 60000)	(PTF 61000 + PFA 60000)	-
Capacity in combination	74 W/K	113 W/K	152 W/K	-
(Filterfan + Exhaust Filter)	(PTF 60500 + PFA 60000)	(PTF 60700 + PFA 60000)	(PTF 61000 + PFA 60000)	-
Max. static pressure (Airflow = 0)	71 Pa	88 Pa	158 Pa	-
Filtration efficiency	0.8100000000000001	81%%	0.8100000000000001	-
Filter material grade	G 3 (DIN EN 779)	G 3 (DIN EN 779)	G 3 (DIN EN 779)	-
Duty cycle	1	1	1	-

Technical data	PTF 60500	PTF 60700	PTF 61000	PTFA 60000
Bearing type	ball bearings	ball bearings	ball bearings	n/a
Fitting position	horizontal	horizontal	horizontal	any
Construction	metal chassis cover powder coaded, snapin plastic housing			
Weight	5.5 kg	5.8 kg	6.0 kg	3.1 kg
Safety protection	in accordance with DIN 31 001			
Color	RAL 7035, Light Grey			
Connections	terminal strip	terminal strip	terminal strip	n/a

© Hammond Manufacturing

105-550 CFM Filtered Fan Boxes *XF Series*

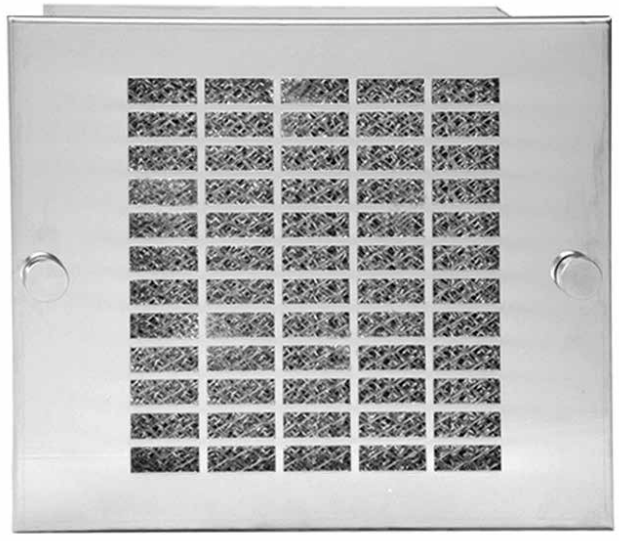

Quick Link: hammfg.com/XF

Description

- In a typical cooling arrangement, the filtered fan box pulls air into the enclosures and the filter grill is used as an air outlet.
- The washable aluminum filter grill and the air filter are easily accessible and can be removed for cleaning.
- The filtered fan boxes are available in either 115 VAC or 230 VAC, 50/60 Hz.
- Filtered passive ventilation can be provided by an exhaust filter for either convection cooling or in combination with a fan in forced air cooling.

Standards

- UR/CUR/CE approved fan motors.
- CSA listed on fan only.

Features

- 115 VAC or 230 VAC, 50/60 Hz.
- 12" lead wires.
- Exceptionally quiet operation.
- Versatile mounting and adaptability.
- Heavy-gauge steel construction.
- Attractive stainless steel grills.
- Shipped with air flow to pressurize. Can be user modified to exhaust.
- Aluminum filter is coated with adhesive baffle surfaces for dust and dirt collection. Can be recoated after cleaning for optimum performance.
- Drilling template included.
- Note: One grill and filter are included with each fan package. Normally, an additional exhaust grill and filter are required for each installation and must be ordered separately.

Accessories

- Filter Coat...*See Page* ***265***

Exhaust Grill and Filters

Part No.	H	W
XFG4	6.13	7.38
XFG6	7.63	8.88
XFG10	11.63	13.00

[1] Dimension for mounting and cabinet cutout. Secure sheet metal with #10 hardware.

Replacement Filters

Part No.	Pkg. Qty.
XFF4	3
XFF6	3
XFF10	3

Filtered Fan Boxes

Part No.	Free Flow Air Delivery (CFM)	Volts	RPM Nominal	Running Amps	Watts	Fan Housing H	Fan Housing W	Fan Housing D
XF4115	105	115	3000	0.18	15	5.63	5.63	2.38
XF4230	105	230	3000	0.09	15	5.63	5.63	2.38
XF6115	220	115	3300	0.29	33	7.13	7.13	3.00
XF6230	220	230	3300	0.15	33	7.13	7.13	3.00
XF10115	560	115	1600	0.87	60	11.13	11.13	4.56
XF10230	560	230	1600	0.45	60	11.13	11.13	4.56

[1] Dimension for mounting and cabinet cutout. Secure sheet metal with #10 hardware.

Distributed by Gross Automation | +1 (262) 252-1600. | hammondsales@grossautomation.com

Technical references and CAD downloads available at www.hammondmfg.com

All dimensions in inches unless specified otherwise

© Hammond Manufacturing

Filter Fan Kits *DNFF Series*

Features

- Kit includes one (1) of the following:
  - Fan
  - Plastic Filter Grill
  - Filter
  - Metal Grill
  - Wire Cord or Leads (see table)
  - Includes Mounting Hardware
- Flame retardant, ABS plastic filter fan grill is molded in a choice of four colors to match our racks & accessories.
  - "BK" (Black)
  - "GY" (ANSI 61 Gray)
  - "LG" (Light Gray - RAL7035)
  - "CG" (Beige)
- Fan component is UL recognized to UL 507, and cUL recognized or CSA certified to CSA-C22.2 No. 113.
- If required, complementary exhaust filter grill kits (without fan) available - see XPFA Series

Quick Link: hammfg.com/DNFF

Part No. Black Filter Grill	Part No. ANSI 61 Gray Filter Grill	Part No. Gray/Beige Filter Grill	Part No. Light Gray Filter Grill	VAC	Fan Size	CFM	Cord Length	Noise (dB)
DNFF080BK115	**DNFF080GY115**	**DNFF080CG115**	**DNFF080LG115**	115	3.15	32	11 Inch leads	34
DNFF120BK115	**DNFF120GY115**	**DNFF120CG115**	**DNFF120LG115**	115	4.70	105	24 Inch cord	56
DNFF150BK115	**DNFF150GY115**	**DNFF150CG115**	**DNFF150LG115**	115	6.00	230	12 Inch leads	53
DNFF254BK115	**DNFF254GY115**	**DNFF254CG115**	**DNFF254LG115**	115	10.00	550	24 Inch cord	60
DNFF080BK230	**DNFF080GY230**	**DNFF080CG230**	**DNFF080LG230**	230	3.15	32	11 Inch leads	34
DNFF120BK230	**DNFF120GY230**	**DNFF120CG230**	**DNFF120LG230**	230	4.70	105	24 Inch cord	56
DNFF150BK230	**DNFF150GY230**	**DNFF150CG230**	**DNFF150LG230**	230	6.00	230	12 Inch leads	53
DNFF254BK230	**DNFF254GY230**	**DNFF254CG230**	**DNFF254LG230**	230	10.00	550	24 Inch cord	60

© Hammond Manufacturing

Filter Fan Grills *XPFA Series*

Features

- Create your own filter fans or exhaust grills
- Mounts easily with 4 screws using template and hardware provided.
- Maintains an IP54 seal against enclosure.
- Complete with flame retardant ABS plastic grill and flame retardant synthetic filter.
- Integral gasket on reverse side of grill, seals against mounting surface.
- Hole cutout is NOT critical as rear of filter grill seals to surface (see rear photo below)
- Can be used with standard 3.15" or 4.7" square fans (available below or use your own) or alone as as exhaust grill
- Molded in a choice of four colors to match our racks & accessories.
  - "BK" (Black)
  - "CG" (Gray/Beige - RAL7032)
  - "GY" (ANSI 61 Gray)
  - "LG" (Light Gray - RAL7035)

Quick Link: hammfg.com/XPFA

Replacement Filters (Sold in Pack of 5)

Part No.	Use with Fan Size	Use with Grill Series
PFF1000	3.15	XPFA80
PFF2000	4.70	XPFA120
PFF4000	7.72	XPFA150
PFF6000	12.00	XPFA254

Part No. Black	Part No. Gray/Beige	Part No. ANSI 61 Gray	Part No. Light Gray	Overall Dimensions H	W	D	Use With Square Fan Size
XPFA80BK	**XPFA80CG**	**XPFA80GY**	**XPFA80LG**	4.14	4.14	0.63	3.15
XPFA120BK	**XPFA120CG**	**XPFA120GY**	**XPFA120LG**	5.91	5.91	0.94	4.70
XPFA150BK	**XPFA150CG**	**XPFA150GY**	**XPFA150LG**	7.72	7.72	0.94	6.00
XPFA254BK	**XPFA254CG**	**XPFA254GY**	**XPFA254LG**	12.00	12.00	0.94	10.00

© Hammond Manufacturing

Filterfan Rainhoods - 3R *RH Series*

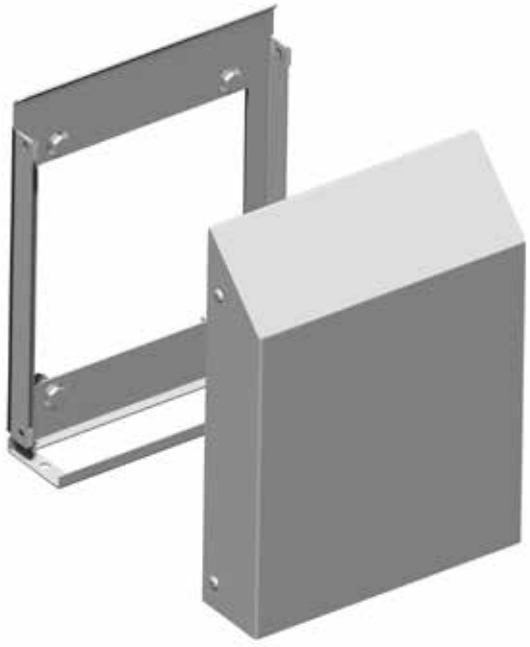

Quick Link: hammfg.com/RH

Application

- Type 3R / Outdoor Rainhoods
- Protection against rain and snow or large airborne debris
- Sold individually

Features

- Easy installation
- Covers many external mounted Fans & Grills
- Fits PF2000/PF22000 thru PF5/6/7000 series Filterfans
- Tamperproof hardware and sealing gasket provided

Standards

- UL 508A type 3R
- CSA C22.2 #94-M1

Finish

- Cover offered in ANSI61 gray or RAL7035 light gray powder coated finish on mild steel
- Also offered in stainless steel 304 #4 finish
- Base in Galvanized sheet steel

Grill/Solid Cover Kit

- Can be installed in bottom opening of rain hood
- Grill allows ventilation while preventing unwanted entry of large contaminants
- Solid cover allows sealing of opening when fan/filter not in use

	Overall Dimensions				
Part No.	H	W	D	Use with	Finish
RH20000GY	10.44	7.77	2.17	PF2000/PF22000 Series	ANSI 61 Gray
RH20000LG	10.44	7.77	2.17	PF2000/PF22000 Series	RAL7035
RH20000SS	10.44	7.77	2.17	PF2000/PF22000 Series	Stainless Steel
RH40000GY	14.57	11.71	3.35	PF25, 30, 32, 43000 Series	ANSI 61 Gray
RH40000LG	14.57	11.71	3.35	PF25, 30, 32, 43000 Series	RAL7035
RH40000SS	14.57	11.71	3.35	PF25, 30, 32, 43000 Series	Stainless Steel
RH60000GY	15.88	14.66	4.33	PF5,6,7000, 65, 67000 Series	ANSI 61 Gray
RH60000LG	15.88	14.66	4.33	PF5,6,7000, 65, 67000 Series	RAL7035
RH60000SS	15.88	14.66	4.33	PF5,6,7000, 65, 67000 Series	Stainless Steel

Grill/Solid Cover Kit

Part No.	Use With	Finish
RHA20000G	RH20000GY,LG,SS	Galvanized Steel
RHA40000G	RH40000GY, LG, SS	Galvanized Steel
RHA60000G	RH60000GY,LG, SS	Galvanized Steel

© Hammond Manufacturing

Filterfan Rainhoods - 4/4X *RHN4 Series*

Quick Link: hammfg.com/RHN4

Application

- Type 4/4X (IPx6) Rainhoods (when used with PF Series Filterfans)
- Ideal for locations with high exposure to spraying water
- Painted galvanized steel version for Type 4
- 304 and 316 stainless steel versions for Type 4X
- Specially gasketed, 316 stainless steel, sanitary version for FDA compatible Type 4X
- Sold individually

Features

- Easy installation - mounting bracket installed around cutout and rainhood slides down over bracket
- High compression, closed cell black gasket with multiple seal dams ensure tight, waterproof seal
  - Sanitary version has special FDA compatible, white multiple seal gasket
- Direct spray barrier/baffle designed to maximize airflow while providing superior protection from overspray

Standards

- UL / cUL Listed Type 4 or 4X (as noted)
  - must be used in combination with PF Series Filterfan

Finish

- Base mounting bracket - unpainted 304 SS
- Rainhood Covers
  - Type 4 - ANSI61 Gray (GY) or RAL7035 Light Gray (LG) powder coated finish on galvanized steel
  - Type 4X - 304 or 316 stainless steel with #4 brushed finish
  - Sanitary Type 4X - 316 stainless steel with #4 brushed finish

	Overall Dimensions				
Part No.	H	W	D	Use with	Rating/Finish
RH20000N4GY	10.44	8.70	3.56	PF22000/PFA20000	Type 4 / ANSI 61 Gray
RH20000N4LG	10.44	8.70	3.56	PF22000/PFA20000	Type 4 / RAL7035
RH20000N4SS	10.44	8.70	3.56	PF22000/PFA20000	Type 4X / 304 Stainless Steel
RH20000N4S16	10.44	8.70	3.56	PF22000/PFA20000	Type 4X / 316 Stainless Steel
RH20000N4SSFDA	10.44	8.70	3.56	PF22000/PFA20000	Sanitary Type 4X / 304 Stainless Steel
RH20000N4S16FDA	10.44	8.70	3.56	PF22000/PFA20000	Sanitary Type 4X / 316 Stainless Steel
RH30000N4GY	12.68	10.87	3.56	PF3X000/PFA30000	Type 4 / ANSI 61 Gray
RH30000N4LG	12.68	10.87	3.56	PF3X000/PFA30000	Type 4 / RAL7035
RH30000N4SS	12.68	10.87	3.56	PF3X000/PFA30000	Type 4X / 304 Stainless Steel
RH30000N4S16	12.68	10.87	3.56	PF3X000/PFA30000	Type 4X / 316 Stainless Steel
RH30000N4SSFDA	12.68	10.87	3.56	PF3X000/PFA30000	Sanitary Type 4X / 304 Stainless Steel
RH30000N4S16FDA	12.68	10.87	3.56	PF3X000/PFA30000	Sanitary Type 4X / 316 Stainless Steel
RH40000N4GY	14.65	12.84	3.56	PF4XX00/PFA40000	Type 4 / ANSI 61 Gray
RH40000N4LG	14.65	12.84	3.56	PF4XX00/PFA40000	Type 4 / RAL7035
RH40000N4SS	14.65	12.84	3.56	PF4XX00/PFA40000	Type 4X / 304 Stainless Steel
RH40000N4S16	14.65	12.84	3.56	PF4XX00/PFA40000	Type 4X / 316 Stainless Steel
RH40000N4SSFDA	14.65	12.84	3.56	PF4XX00/PFA40000	Sanitary Type 4X / 304 Stainless Steel
RH40000N4S16FDA	14.65	12.84	3.56	PF4XX00/PFA40000	Sanitary Type 4X / 316 Stainless Steel
RH60000N4GY	17.33	15.51	3.56	PF6XX00/PFA60000	Type 4 / ANSI 61 Gray
RH60000N4LG	17.33	15.51	3.56	PF6XX00/PFA60000	Type 4 / RAL7035
RH60000N4SS	17.33	15.51	3.56	PF6XX00/PFA60000	Type 4X / 304 Stainless Steel
RH60000N4S16	17.33	15.51	3.56	PF6XX00/PFA60000	Type 4X / 316 Stainless Steel
RH60000N4SSFDA	17.33	15.51	3.56	PF6XX00/PFA60000	Sanitary Type 4X / 304 Stainless Steel
RH60000N4S16FDA	17.33	15.51	3.56	PF6XX00/PFA60000	Sanitary Type 4X / 316 Stainless Steel

Distributed by Gulf Automation | PF6XX00/PFA60000 | hammondsales@gulfautomation.com

Technical references and CAD downloads available at www.hammondmfg.com

All dimensions in inches unless specified otherwise

© Hammond Manufacturing

Canada: 519.822.2960 or 905.456.3770 USA: 716.630.7030

Data Subject to change without notice

Rack Mount Fan Tray *FT Series*

Features

- Standard 19" rack mount
- Compact and economical rack cooling solution.
- Fan trays can be positioned at the bottom of a rack to force air through the cabinet, at the top to exhaust air out or below specific pieces of equipment for spot cooling
- Choice of two operating voltages 115VAC (or 220VAC) - both 50/60 Hz., thermally protected, ball bearing fans
- Circuit breaker protected
- Low profile 1.75" (1U) of panel space
- 115VAC versions includes a 6' 14/3 STJW cord with molded 3 prong plug (NEMA 5-15P)
- 220VAC versions include an IEC input receptacle (IEC320-C14)
- Integral finger guards above and below fans
- Case width is 17"
- 6 and 9 fan units include an adjustable rear mounting bracket (mounts to rear panel rails) for extra stability
- Shipped fully assembled
- Available with or without on/off switch
- Finished in textured black powder paint

Quick Link: hammfg.com/FT

115 VAC Fan Trays

Part No. Without Switch	Part No. With Switch	Number Of Fans	Free Flow Air Delivery (CFM)	Power (50/60 Hz.)	Running Amps	Running Wattage	Case Depth	Rear Bracket Depth Min.	Rear Bracket Depth Max.	Noise (dB)
FT300TA1BK	**FT300HA1BK**	3	300	115 VAC	0.5	40	7.50	n/a	n/a	63
FT600TA1BK	**FT600HA1BK**	6	600	115 VAC	1	80	13.00	2.40	19.20	65
FT900TA1BK	**FT900HA1BK**	9	900	115 VAC	1.5	120	18.50	7.90	24.70	69

220 VAC Fan Trays

Part No. Without Switch	Part No. With Switch	Number Of Fans	Free Flow Air Delivery (CFM)	Power (50/60 Hz.)	Running Amps	Running Wattage	Case Depth	Rear Bracket Depth Min.	Rear Bracket Depth Max.	Noise (dB)
FT300TA1220BK	**FT300HA1220BK**	3	300	220 VAC	0.26	40	7.50	n/a	n/a	63
FT600TA1220BK	**FT600HA1220BK**	6	600	220 VAC	0.52	80	13.00	2.40	19.20	65
FT900TA1220BK	**FT900HA1220BK**	9	900	220 VAC	0.79	120	18.50	7.90	24.70	69

Distributed by Gross Automation | +1 (262) 252-1600. | hammondsales@grossautomation.com

Technical references and CAD downloads available at www.hammondmfg.com

All dimensions in inches unless specified otherwise

© Hammond Manufacturing

Quality Products. Service Excellence.

Canada: 519.822.2960 or 905.456.3770 USA: 716.630.7030

Data Subject to change without notice

Rack Mount Intake Blowers

Features

- Standard 19” rack mount
- Air delivery from more than 50% of their 17” width
- Internal neoprene isolation mounts reduce transmission of vibration to the rack
- Air intake only, to pressurize the rack with filtered air
- Heavy steel construction
- Attractive 19” stainless steel grille included
- 115 VAC, 50/60 Hz. motor is UL recognized, CSA certified, ball bearing type, cooled by incoming air
- Includes permanent filter (replacement filters available below)
- Comes with 6’ STJ 3- wire cord
- Optional replacement filters come in a pack of five (5).

Accessories

- Filter Coat...*See Page* ***265***

Part No.	Free Flow Air Delivery (CFM)	Running Amps	RPM Nominal	Noise (dB)	Blower Type	Ambient Temperature (F)	Mounting Dimentions Rack Units	Mounting Dimentions Height	Replacement Filter 5-Pack
HB2160A	145 / 125	0.7	2500 / 3000	62	TransverseFlow	-20 to +250	2U	3.50	**HB2UFILTER**
HB3250A	155 / 200	1.2	2750 / 3000	72	Double Centrifugal	-20 to +250	3U	5.25	**HB3UFILTER**
HB4500A	405 / 465	2.5	2750 / 3300	76	Double Centrifugal	-20 to +250	4U	7.00	**HB4UFILTER**

Fan Panel Assembly

Features

- Choice of two or three fan models - mounted on a standard width 19” rack panel - shipped assembled as shown.
- Front of panel is punched for finger protection and the rear of the fans assembled with metal guards
- Perfect as an exhaust fan panel or when using “push-pull” cooling (ie..unit pulls air out of the rack cabinet)
- Rugged textured black powder paint finish.
- Two (2) or Three (3) fan daisy chain wire lead/cord, 72” in length.

Part No.	Number of Fans	Voltage (50/60Hz.)	Fan Panel CFM	Noise (dB)	115VAC Plug	Mounting Dimensions Rack Units	Mounting Dimensions Height
PPGPFPA	2	115 VAC	210	60	Yes	3U	5.25
PPGPFPA230	2	230 VAC	210	60	No	3U	5.25
FP3F115	3	115 VAC	315	63	Yes	3U	5.25
FP3F230	3	230 VAC	315	63	No	3U	5.25

Note: Front fan guards are punched into panel - rear fan guards are our standard metal fan guards.

Distributed by Grosse Automation | (262) 252-1000 | hammondsales@grossautomation.com

Technical references and CAD downloads available at www.hammondmfg.com

All dimensions in inches unless specified otherwise

© Hammond Manufacturing

125-1300 W Fan Heater with Thermostat

Features

- Designed to prevent condensation or maintain minimum temperature in enclosures.
- Built in Thermostat. (-18 C to +38 C) (0 F to +100 F)
- Fan Auto/On switch with pilot light for Heat On indication
- High temperature safety protection
- Aluminum alloy outer casing
- Connection via terminal block.
- 1300W models are cURus approved only.

Part No.	Watts	Voltage	Hz	CFM	Overall Dimensions Height x Width x Depth
FLHTF125A115	125 W	120 V	60	20	5.5" x 4.0" x 5.3"
FLHTF125A230	105/125 W	220/240 V	50/60	20	5.5" x 4.0" x 5.3"
FLHTF200A115	200 W	120 V	60	20	5.5" x 4.0" x 5.3"
FLHTF200A230	165/200 W	220/240 V	50/60	20	5.5" x 4.0" x 5.3"
FLHTF400A115	400 W	120 V	60	20	7.5" x 4.0" x 5.3"
FLHTF400A230	335/400 W	220/240 V	50/60	20	7.5" x 4.0" x 5.3"
FLHTF800A115	800 W	120 V	60	20	7.5" x 4.0" x 5.3"
FLHTF800A230	670/800 W	220/240 V	50/60	20	7.5" x 4.0" x 5.3"
FLHTF1300A115	1300 W	120 V	60	50	7.5" x 5.6" x 6.9"
FLHTF1300A230	1080/1300 W	220/240 V	50/60	50	7.5" x 5.6" x 6.9"

250-400 W Fan Heater

Features

- For use when larger heating capacities or internal forced air circulation is required.
- Designed to prevent condensation or maintain minimum temperature in enclosures.
- Thermostats are also available.

Accessories

- Temperature Controls and Accessories...*See Page* ***262***

Part No.	Watts	Surface Temperature	Starting Current	Dimensions Length x Width x Depth
SHGL04600	250	167°F	2.2 A	7.00 x 3.15 x 3.15
SHGL04601	400	167°F	3.5 A	9.76 x 3.15 x 3.15

Operating Voltage:	AC 110-120 V, 50/60 Hz
Circulation Power:	20 CFM Free Blowing
Axial Fan:	Ball Bearing
Durability:	30,000 hrs. at 68°F ambient temperature
Heating Element:	Resistance heating element with temperature limiter
Heating Body:	Extruded aluminum, black anodized
Connection:	3 pole terminal for 12 AWG
Mounting:	Easily installed by clip mounting on 35 mm DIN rails (included)
Protection Class:	1 (tested for grounding at 1250 V)
Protection:	IP20
Approval:	UL Recognized Component, cUL Recognized Component, CE

Distributed by Gross Automation | +1 (262) 252-1600. | hammondsales@grossautomation.com

Technical references and CAD downloads available at www.hammondmfg.com

All dimensions in inches unless specified otherwise

© Hammond Manufacturing

550-650 W High Wattage Fan Heater

Features

- For large heating capacity requirements.
- Maintains minimum operating temperatures in enclosures.
- Helps prevent failures to components caused by condensation and corrosion.
- Built-in thermostat and control light.
- Heating power adjusts to ambient temperature.
- Heat exits top of fan heater. (add 2" clearance for heat sensitive parts)

Part No.	Watts	Inrush Current (Amps)	Volts	Temperature Maximum with Fan
SCR027009	550 W	14 A	AC 120	250°F/120°C
SCR027009230	550 W	13 A	AC 230	250°F/120°C
SCR027019	650 W	15 A	AC 120	320°F/160°C

Air Flow:	20 CFM (550W), 26 CFM (650W)
Thermostat Range:	32 - 140 degrees Fahrenheit
Heating Element:	PTC - Semiconductor/resistor
Housing:	Plastic, rated UL94-VO
Connection:	3 pole terminal, AWG 14 max (2.5 mm2)
Mounting:	Clip for 35mm DIN rail
Protection Class:	II (Double Insulated)
Protection Type:	IP20
Approval:	UL Recognized Component, cUL Recognized Component, CE

15-150 W Heater

Features

- Designed to provide enclosed electronic, pneumatic, hydraulic and mechanical equipment with protection from low temperatures, condensation and corrosion.
- The PTC (Positive Temperature Coefficient) heater unit maintains a stable temperature environment within enclosures, allowing critical components to perform with consistent reliability for longer periods.
- Push connectors for quick and easy wiring
- Used in combination with Normally Closed Thermostat or Humidistat

Accessories

- Temperature Controls and Accessories...*See Page* ***262***

Part No.	Watts[1]	Max. Current[2]	L
SHG14000	15W	1.1A	2.60
SHG14001	30W	1.2A	2.60
SHG14003	45W	1.8A	2.60
SHG14005	60W	2.5A	5.50
SHG14006	75W	4.5A	5.50
SHG14007	100W	5.0A	5.50
SHG14008	150W	7.5A	8.70

[1] At 68oF (20oC) ambient temperature
[2] Inrush current

Operating Voltage:	AC/DC 110- - 250 V
Heating Element:	PTC resistor, self regulating surface temperature
Heating Body:	Anodized extruded aluminum
Connection:	Push-type terminals for stranded and solid wire 3 x AWG 20 AWG 16 (0.5 - 1.5 mm2
Mounting:	Easily installed by clip mounting on 35 mm DIN rails (included)
Protection Class:	I, test voltage 1600 V
Protection:	IP20
Approval:	UL Recognized Component, cUL Recognized Component, CE

Distributed by Gross Automation | +1 (262) 252-1600. | hammondsales@grossautomation.com

Technical references and CAD downloads available at www.hammondmfg.com

All dimensions in inches unless specified otherwise

© Hammond Manufacturing

10-30 W Mini Radiant Heaters

Features

- Designed for use in small enclosure housing or for heating of isolated spots in sensitive areas
- Compact design
- Used in combination with Normally Closed Thermostat or Humidistat

Accessories

- Temperature Controls and Accessories...*See Page* ***262***

Part No.	Watts	Max. Current	X	Y	Z	L
SHGM1410	10	1	1.16	1.77	1.97	12.00
SHGM1420	20	1.1	1.16	1.77	1.97	12.00
SHGM1430	30	1.2	1.16	1.77	1.97	12.00

Operating Voltage:	110-250 AC 50/60 Hz
Heating Element:	PTC resistor, self regulating surface temperature
Heating Body:	Aluminum, black anodised
Max surface temperature:	10w @ 203°F/95°C 20w @239°F/115°C 30w @284°F/140°C
Connection:	Connecting cable 11.8”
Mounting:	Din rail 35mm profile
Protection class:	IP20
Approval:	UL Recognized Component, cUL Recognized Componet, CE

100-400 W Control Panel Heater

Features

- When larger heating capacities or internal forced air circulation is required and space is limited.
- Compact design to prevent condensation or maintain minimum temperature in enclosures.
- Fan is included.

Accessories

- Temperature Controls and Accessories...*See Page* ***262***

Part No.	Watts	Operating Current (Amps)	Volts	Temperature Maximum with Fan
SHV031029	100 W	0.89	AC 120	250°F/120°C
SHV031039	150 W	1.3	AC 120	320°F/160°C
SHV031139	200 W	1.79	AC 120	250°F/120°C
SHV031149	300 W	2.62	AC 120	320°F/160°C
SHV031159	400 W	3.45	AC 120	360°F/180°C

Operating Voltage:	AC 110 -120 V 50/60 Hz
Air Flow:	20 CFM (100W, 150W heaters), 63 CFM (200W, 300W, 400W heaters)
Axial Fan:	Ball bearing
Durability:	30,000 hrs. at 68°F ambient temperature
Heating Element:	Cartridge heater
Heating Body:	Die cast aluminum
Connection:	5 pole terminal for 14 AWG (maximum)
G/L1/N1:	Heater
L2/N2:	Fan
Mounting:	Easily installed by clip mounting on 35 mm DIN rails (included)
Protection class:	1 (tested for grounding at 1250 V)
Protection:	IP44
Approval:	UL Recognized Component, cUL Recognized Component,CE

Distributed by Gross Automation | +1 (262) 251-1600 | hammondcase@grossautomation.com

Technical references and CAD downloads available at www.hammondmfg.com

All dimensions in inches unless specified otherwise

© Hammond Manufacturing

Large Rainproof Ventilator

- Designed to equalize internal / external pressure and temperature
- Ventilators assist in condensation prevention by allowing enclosures to breathe Suitable for most types of metallic and non-metallic enclosures
- Molded in corrosion resistant UV stabilized polycarbonate plastic, finish RAL7035 Light Gray
- Gasket protection to enclosure wall
- Mount to enclosure wall thickness up to .16” with standard screws
- Internal vent channel & grille reduces insect intrusion
- Complies with NEMA Type 3R, IEC 60529 IP24
- Package quantity 1

Part No.	SDV280-1

Small Rainproof Ventilator

- Designed to equalize internal / external pressure and temperature
- Ventilators assist in condensation prevention by allowing enclosures to breathe Suitable for most types of metallic and non-metallic enclosures
- Molded in corrosion resistant UV stabilized polycarbonate plastic, finish RAL7035 Light Gray
- Gasket protection to enclosure wall
- Mount to enclosure wall thickness up to .16”
- Internal vent channel & grille reduces insect intrusion
- Complies with NEMA Type 3R, IEC 60529 IP24
- Package quantity 1

Part No.	SDV180-1

Pressure Compensation Plug

- Packaged individually.
- Provides for controlled pressure compensation due to temperature variations (i.e. night/day operation).
- When mounted to bottom of enclosure, this unique design provides a method of effectively draining moisture from within the enclosure
- Recommend two plugs per cabinet in opposite locations.
- Pipe Thread 1/2”NPT (actual dia. 0.813”)
- Recommended Torque 10 NM

Part No.	BDN4XN1

CSA/A Ex Approvals:	Class I, Zone 1, Ex e II
Ingress Protection:	IP66, CSA Enclosure Type NEMA 4X
Impact Resistance:	20Nm (7Nm GF Nylon)
Materials:	Durethan BKV 30 N1 30% Glass Filled Nylon
Operating Temp:	-50C to +85C

Distributed by Gross Automation | (800) 252-1600. | hammond.sales@grossautomation.com

Technical references and CAD downloads available at www.hammondmfg.com

All dimensions in inches unless specified otherwise

© Hammond Manufacturing

Breather Kit

- Packaged individually.
- Provides for controlled pressure compensation due to temperature variations (i.e. night/day operation).
- Recommend two plugs per cabinet in opposite locations.
- Minimum cutout diameter 1.46”
- Includes sealing gasket

Part No.	Dimensions (Diameter x Depth)
SDA412	2.6” x 1.2”

Mounting:	PG 29 (1.14”) thread with union nut, minimum cutout diameter
Material:	Polycarbonate UL94VO
Protection:	IP45
Color:	RAL 7035 Light Gray
Operating Temperature:	- 45 °C +70 °C
UV Rating:	per UL746C (F1)

Type 1 Louvered Ventilating Plates

Features

- Provides ventilation in enclosures where required.
- Easily installed in the field by cutting a square hole of the proper size and bolting the ventilator in place.
- Finished in gray.
- Hole diameter is 0.22”.

Part No.	Plate Size Height	Plate Size Width	No. of Louvers	No. of Rows	Louvers Length	Opening Area (in2)
1481L44	5.62	5.50	4	1	4	4.5
1481L66	7.87	7.50	14	2	2	5.3
1481L88	10.56	10.50	18	2	4	20.2

Distributed by Gross Automation | +1 (262) 252-1600. | hammondsales@grossautomation.com

Technical references and CAD downloads available at www.hammondmfg.com

All dimensions in inches unless specified otherwise

Quality Products. Service Excellence.
© Hammond Manufacturing
Canada: 519.822.2960 or 905.456.3770 USA: 716.630.7030
Data Subject to change without notice

Type 3R Louvered Vent Kits

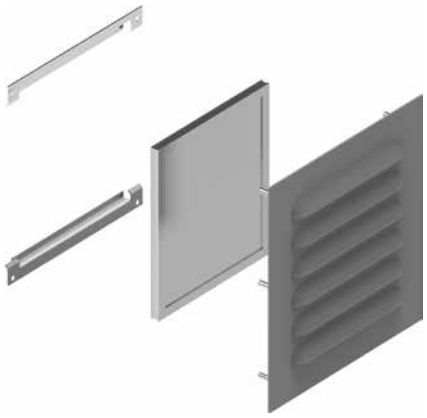

Features

- Provides ventilation in enclosures for either Indoor or outdoor locations
- Gasketed sealing kit provides protection to nema 3R
- Aluminum filter mesh provides ingress protection for both solid debris and outdoor rain conditions
- Easily field install kit includes all hardware.
- Louver plates are offered in both 14 gauge steel with ANSI61 Gray power coat finish or 304 Stainless Steel
- Sold in QTY 1

Part Number		Overall Size H x W	Number of	Louver Length
ANSI 61 Gray	Stainless Steel	(inches)	Louvers	(inches)
1481L3R55GY	1481L3R55SS	5.56 x 5.30	3	3.00
1481L3R56GY	1481L3R56SS	5.30 x 6.30	3	4.00
1481L3R66GY	1481L3R66SS	6.40 x 6.30	4	4.00
1481L3R68GY	-	6.40 x 8.30	4	6.00
1481L3R88GY	-	8.69 x 8.30	6	6.00
1481L3R610GY	-	6.62 x 10.30	4	8.00
1481L3R810GY	-	9.0 x 10.30	6	8.00
1481L3R1110GY	-	11.37 x 10.30	8	8.00
1481L3R1510GY	-	16.12 x 10.30	9	8.00

Replacement Aluminum Filters

Part Number	Size H x W (in)
LFK55	3.15 x 3.00
LFK56	3.25 x 4.00
LFK66	4.375 x 4.00
LFK68	4.375 x 6.00
LFK88	6.625 x 6.00
LFK610	4.563 x 8.00
LFK810	6.938 x 8.00
LFK1110	9.313 x 8.00
LFK1510	14.062 x 8.00

Ventilation Kit Type 4X

- Designed to equalize internal / external pressure and temperature
- Ventilators assist in condensation prevention by allowing enclosures to breathe
- Internal baffles create airflow pattern that allows air to pass between inside the enclosure to the outside environment
- Molded in corrosion resistant polycarbonate material finish in RAL7035 Light Gray
- Designed for use with enclosure wall thickness from 16 gauge to 1/4 “
- Compatible for use with both metallic and non metallic enclosures
- Installation template included
- Package quantity 2

Part No.	SDVN4XN2

Ingress Protection	UL & CSA Type 1,3R,4, 4X IP66
Material	Injected Molded Polycarbonate
Gasket Material	(FIP) Polyurethane
Operating Temperature	266 F to -31F (130 C to -35 C)
Flamability	V-O per UL94
Outdoor rating	UV rating (ff) per UL746C-UV stabilized

Distributed by Gross Automation | (262) 252-1600. | hammondsales@grossautomation.com

Technical references and CAD downloads available at www.hammondmfg.com

All dimensions in inches unless specified otherwise

© Hammond Manufacturing

Thermostats

Features

- Designed to provide air temperature control and monitoring in cabinets.
- Thermostat NC (Normally Closed) for the control of heaters and heater fans.
- Thermostat NO (Normally Open) for the control of cooling units, or for switching signal transmitters in case of overheating.
- Available in Fahrenheit or Celsius.

NC - Normally Closed (Red)

- Used in conjunction with heaters.
- Contact opens when rising temperatures reach the set point temperature, shutting heater off.

NO - Normally open (Blue)

- Used in conjunction with fans.
- Contact closes when rising temperatures reach the set point temperature, turning fan on.

Part No.	Scale	Contact Type	Dimensions Height x Width x Depth	Switching Capacity
SKT011409NC	F°	Normally Closed	2.8 x 1.5 x 1.4	15A @ 120VAC, 10A @ 240VAC, 30W @ DC
SKT011409NC-C	C°	Normally Closed	2.8 x 1.5 x 1.4	15A @ 120VAC, 10A @ 240VAC, 30W @ DC
SKT011419NO	F°	Normally Open	2.8 x 1.5 x 1.4	15A @ 120VAC, 10A @ 240VAC, 30W @ DC
SKT011419NO-C	C°	Normally Open	2.8 x 1.5 x 1.4	15A @ 120VAC, 10A @ 240VAC, 30W @ DC

Sensor Element:	Thermostatic bi-metal
Switching difference (hysteresis):	+ or - 4°F (+or- 3°K)
Adjustment Range:	30 - 140°F / 0 - 60°C
Noise Suppression:	N (according to VDE 0875)
Connection:	2 pole terminal for AWG 14 (2.5 mm²)
Mounting:	Easily installed by clip mounting on 35 or 38mm DIN rail (included)
Housing:	Flame retardant plastic UL94VO
Color:	Gray (SB)
Protection:	IP20
Approval:	UL Recognized Component, cUL Recognized Component, CE

Distributed by Gross Automation | +1 (262) 252-1600. | hammondsales@grossautomation.com

Technical references and CAD downloads available at www.hammondmfg.com

All dimensions in inches unless specified otherwise

Quality Products. Service Excellence.
© Hammond Manufacturing
Canada: 519.822.2960 or 905.456.3770 USA: 716.630.7030
Data Subject to change without notice

Twin Thermostats

Features

- Designed to provide air temperature control and monitoring in cabinets
- Twin thermostats integrates two independently switchable thermostats, unlike thermostats with changeover contacts, connected devices can be switched in different temperature ranges.
- Available with N.C/N.O., N.C/N.C., N.O/N.O.

	Part Number		
Scale: (Fahrenheit)	**SKTD541**	**SKTD542**	**SKTD543**
Scale: (Celsius)	**SKTD541C**	**SKTD542C**	**SKTD543C**
Type of contact:	N.C. / N.O. with spring contact	N.C. / N.C. with spring contact	N.O. / N.O. with spring contact
Suitable for the operation of	Fan and Heater	Heaters and Alarms	Fans and Alarms
Switching tolerance:	+ - 4K		
Switching Capacity:	N.C. 240 VAC /10A N.O. 120 VAC / 15 A DC max 30watts		
Adjustment Range:	32-140° F / 0-60° C		
Connection:	Screw terminal for AWG 14 / (2.5mm2)		
Mounting:	Clip mounting on 35 mm DIN rails		
Dimension	Height 3.17" (80.5mm) Width 2.32" (59mm) Depth 1.5" (38mm)		
Housing:	Flame retardant plastic UL94VO		
Color:	Light Gray RAL7035		
Protection:	IP20		
Approval:	UL Recognized Component, cUL Recognized Component, CE		

Mechanical Humidistat

Features

- Mechanical Humidistat regulates the control of heaters or fans whenever the preset level of relative humidity.

Part No.	Dimensions Height x Width x Depth	Switching Capacity	
SKH600NCC	3.5 x 1.5 x 1.8	NOC FAN	AC 120 V - 2A
		NOC FAN	AC 240 V - 2A
		NCC Heater	AC 120 V - 5A
		NCC Heater	AC 240 V - 5A
			DC 30 Watts

Control Range:	40 to 90% r.H.
Differential Gap:	Approximately 5%
Switch Point Accuracy:	+/- 4% based on 50% r.H.
Working Temperature Range:	30°F to 140°F (0°C to 60°C)
Storage Temperature:	-5°F to 180°F (-20°C to 80°C)
Type of Contact:	Change-over switch
Sensor:	Polyamide band
Type of Connection:	2-pole clamp, For AWG14 (2.5mm2)
Color:	RAL 7035 - Grey
Protection Category:	IP20
Mounting:	Easily installed by clip mounting on 35mm DIN rail (7 included)
Approval:	CE

Distributed by Gross Automation | +1 (262) 252-1600. | hammondsales@grossautomation.com

Technical references and CAD downloads available at www.hammondmfg.com

All dimensions in inches unless specified otherwise

© Hammond Manufacturing

Humidity and Temperature Control

Features

- Designed to provide both air temperature and humidity control as well as monitoring in electrical and electronic enclosures.
- Independently senses the relative humidity and temperature. Resistive and inductive loads (heaters or filter fans) can be switched.
- Highly effective in ATMs, parking control gates, ticket dispensers and traffic control systems where equipment is exposed to wide ranging outdoor elements.

Part No.	Dimensions Height x Width x Depth	Temperature Display	Operating Voltage
SKTH012009	3.0 x 2.4 x 1.77	+32 to + 140 F	100 - 240 VAC 50/50 Hz (min 90 V , max 265 V)
SKTH012009-C	3.0 x 2.4 x 1.77	0 to +60 C	100 - 240 VAC 50/50 Hz (min 90 V , max 265 V)

Switching Difference (temperature)	2K (+/- 1K at 25C (+77F) 50% RH)
Switching Difference (humidity)	4% RH (+/- 1K at 25C (+77F) 50% RH)
Setting range (humidity)	50 to 90% RH
Reaction time	aprox 5 sec
Contact type	Change over (relay)
Service life	NO/NC 30,000 cycles
Max Switching Relay output	10A Resistive / 1.6A inductive @ 240 VAC 0.6 @ 60 VDC
Max inrush current	AC 30 A for 10 sec
Case	Plastic UL 94V-O light Gray
Mounting	35 mm Din rail
Weight	3.5 oz . 100g
Protection	IP20
Approvals	UL file E164102 / UR componet / CE

Filter Kits

For DTS3XXX Series

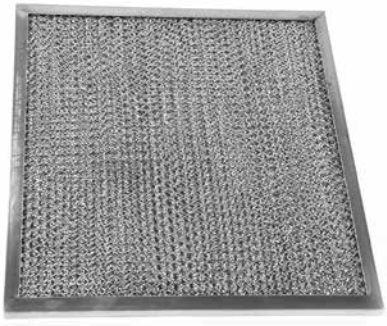

- Field install kit for Condenser Fan intake
- Washable Aluminum mesh

Part Number	Description
18881500008	Filter kit for DTS 3021/3031 series
18881500005	Filter kit for DTS 3041/3061 series
18881500009	Filter kit for DTS 31xx series
18881500006	Filter kit for DTS 31x1SL/31x5 series
18881500001	Filter kit for DTS 32xx series
18881500007	Filter kit for DTS 32x5 series
18881500010	Filter kit for DTS 34xx series
18881500004	Filter kit for DTS 36xx series

© Hammond Manufacturing

Condensate Bottle

Features

- External container for collecting the accumulating condensed water
- For use with DTS, DTT, PWS series

Part No.	18314000100

Water Condensate Evaporator

- High performance evaporation kit
- Easy to retrofit on any cooling unit

Part No.	KVDTX

Technical Data	
Max. Water Volume	13.5 oz (400 ml)
Evaporation Rate	3.4 oz/hr (100 ml/hr)
Electrical Data	
Voltage(s)	230v /115v
Frequency	50/60 Hz
Voltage Range	100-240v
Max. Power	125 W
Power Range	20-110 W
Nominal Current	0.5 A (230v) / 0.8 A (115v)
Starting Current	1.3 A
Zero Water Current	0.09 A (230v) / 0.18 A (115v)
Mechanical Data	
Height x Width x Depth	3.35” x 10.35” x 4.00”
(85 x 263 x 102 mm)	
Finish	Stainless Steel
Weight	2.6 lbs (1.175 Kg)

Filter Coat

- Provides a filter adhesive with a grease-like consistency which absorbs and traps dust particles.
- 10 oz. bottle with environmentally friendly trigger spray.

Part No.	1475Q

Distributed by Gross Automation | +1 (262) 252-1600. | hammondsales@grossautomation.com

Technical references and CAD downloads available at www.hammondmfg.com

All dimensions in inches unless specified otherwise

© Hammond Manufacturing

© Hammond Manufacturing

General Accessories

Hardware

Door Clamping Hardware (Heavy Duty) 268
Junction Box Quick Release Clamp 268
Door Clamping Hardware 268
Junction Box Padlock Kit 268
Chassis Handles 269
Wallmount Quick Release Clamp 269
Type 12/4, 4X Handle Kits 270
Type 1 Lock Kit 270
Type 12 Handle Kits 271
Type 4 Hardware Kits 271
Type 4, 12 Lock Kit 271
Ground Lugs 272
Ground Wire Kits 272
Padlock Adaptor (Eclipse/Series 2000) 272
Padlock Adaptor (EJ Series) 272
Quarter Turn Inserts and Keys 273
Quarter Turn Assemblies 273
Ground Stud Kit 273
Eclipse Replacement Hinge Pins 274
Hole Plugs 274
Hole Plugs (Type 4X Stainless Steel - UR/cUR) 275
Hole Plugs (Type 4X Non-Metallic - UR/cUR) 275
Eclipse DIN Rail Mounting Kit 276
Eclipse DIN Rails 276
Eclipse Handles 276
Eclipse Mounting Foot Kit 277
Eclipse Rear Mounting Hole Plugs 277
PJU/PCJ Moulded Replacement Polycarbonate Flange 277
PJU/PCJ Moulded Replacement Polycarbonate Feet 278
PJ Stainless Replacement Mounting Feet 278
M6 Screw with Hex/Phillips Head 278
Waterfall Series Washdown Quarter Turn Assemblies 279
Waterfall Series Wallmount Stand-offs 279
PJ/PJU/PCJ Replacement Hardware Kits 279
Mechanical Interlock 280

Panels & Panel Accessories

Inner Panels (1414/EJ/HJ/PJ) 280
Inner Panels (1418/1447/PJW/PHW) 281
Inner Panels (Eclipse) 282
Inner Panels (1420) 283
Inner Panels (HN4FM/1422) 283
Inner Panels (PCJ) 284
Inner Panels (N1J) 284
Inner Panels (N1A) 285
Perforated Inner Panels (1418/1447/PJW/PHW) 285
Inner Panels (1418FS/HN4FS) 286
Perforated Inner Panels (N1A) 287
Perforated Inner Panels (N1J) 287
Swing Panel Kit 288
Terminal Straps and Brackets (1414/EJ/HJ/PJ) 288
Terminal Straps and Brackets (1418/1447/PJW/PHW) 289
Eclipse Swing Panel 290
Swing Panel (PJ/PJU) 290
Swing Panel (PCJ) 291
Eclipse Swing Frame 291
Freestanding Enclosure 19" Swing Out Frames 292
Freestanding Enclosure Center Panel Supports 292
Eclipse Rack Panel 293
Freestanding Enclosure Panel Rails 293

Window Kits

Mild Steel and Stainless Steel Window Kits 294
Frameless Window Kits 294
Deep Hinged Window Kits 295
Polycarbonate HMI Hinged Cover Kits 296
HMI Cover Prop Arm 297
Polycarbonate Inspection Window Kit 297

Lighting

Fluorescent Light Kit & Accessories 298
LED Light Kit 298
Remote Door Switches 299

Miscellaneous

DIN Mount Receptacle 299
Door Support Guide 299
Gland Plates 300
Gland Plates 300
Stack Lights 301
Flange Disconnect Operator Adaptor Kits 302
Drip Shield Kit 303
Pedestal and Base 303
Floor Stand Kit 304
Door Stop Kit 304
Touch-Up Spray Paint 305
Literature Pocket 305
Enclosure Stabilizers 305
Caster Set 306
Casters 307
Panel Lifting Handles 307
Waterfall Series Wash Down Floor Stand Kit 307
Liquid-Tight, Strain Relief Cordgrips 308
Gasket Kits 308
Fold Down Shelf 309
Pole Mounting Kit (PJ/PJU) 309
Pole Mounting Kit 310
Flush Covers (CS/CSKO) 311
Top Hat Cable Modules 311
Barrier Kits for Type 4 Wallmount 312
Barrier Kits for Type 4 Floormount 312
Corrosion Inhibitors 313

© Hammond Manufacturing

Door Clamping Hardware

Heavy Duty

Features

- Replacement hardware for use on all 1418 and 1447 Series enclosures
- Formed heavy gauge stainless steel clamp with stainless steel hardware
- Sold in sets of two

Part No.	1481HC18

Door Clamping Hardware

Features

- Replacement hardware for use on 1414, HJ, 1485, 1486, and 1487 Hammond enclosures.
- Formed heavy gauge stainless steel.
- Set of two

Part No.	1481C14

Junction Box Padlock Kit

Features

- Field installed kit requires drilling of only 4 holes
- Compatible with 1414 and HJ Series junction boxes.
- Only available in 316 Stainless Steel.
- Sold Individually.
- Installation Instructions provided

Part No.	14PLKS16

Junction Box Quick Release Clamp

Junction Box

Features

- Installs easily on standard clamp bracket allowing for quick access.
- Compatible with 1414 and HJ Series junction boxes. Also 1485 Series wireway and 1486 trough.
- Available in plated or stainless steel.
- Sold Individually.

Part No.	Material
14QR	Plated Steel
14QRSS	304 SS
14QRS16	316 SS

© Hammond Manufacturing

Chassis Handles

Features

- Material is round steel.
- Available in Chrome Plated or Black Powder Coated.
- Sold individually or in pairs (see table).
- Hardware included.

Chrome Part No. (Sold Individually)	Black Part No. (Sold Individually)	Black Part No. (Sold in Pairs)	Handle Mounting Hole Centers	Handle Depth	Handle Diameter	Screw Thread	Panel Height
1427B	1427B1BK		1.25	0.62	0.19	4-40	1.75
1427B2	1427B2BK-1	1427B2BK	1.25	1.00	0.19	6-32	1.75
1427D			1.75	0.75	0.19	4-40	5.25
1427E	1427E1BK-1	1427E1BK	2.00	1.00	0.19	6-32	5.25
1427Q			2.25	1.00	0.25	6-32	5.25
1427P	1427P1BK-1	1427P1BK	2.80	1.00	0.25	6-32	5.25
1427G2	1427G2BK		3.00	1.00	0.19	4-40	8.75
1427G3	1427G3BK		3.00	1.50	0.31	10-32	8.75
1427G			3.00	1.75	0.25	8-32	8.75
1427N	1427N1BK		3.50	1.20	0.38	10-32	8.75
1427N2	1427N2BK		3.50	1.50	0.25	8-32	8.75
1427N3			3.50	2.06	0.38	1/4-20 STUD	8.75
1427C1	1427C1BK		4.00	1.30	0.38	10-32	8.75
1427S3	1427S3BK		4.00	1.50	0.31	10-32	8.75
1427S			4.00	1.50	0.25	8-32	8.75
1427S2	1427S2BK		4.00	1.75	0.25	8-32	8.75
1427U3	1427U3BK		4.50	1.50	0.31	10-32	8.75
1427T3	1427T3BK		5.00	1.50	0.31	10-32	12.25
1427T			5.00	1.50	0.25	8-32	12.25
1427T2			5.00	1.75	0.25	8-32	12.25
1427M3			5.25	2.06	0.38	1/4-20 STUD	12.25
1427M	1427M1BK		5.30	1.20	0.38	10-32	12.25
1427W			6.00	1.50	0.25	8-32	12.25
1427W3	1427W3BK		6.00	1.75	0.31	10-32	12.25
1427W2			6.00	1.75	0.25	8-32	12.25
1427L	1427L1BK		7.00	1.30	0.38	10-32	14.00
1427H			8.00	1.63	0.38	10-32	14.00

Wallmount Quick Release Clamp

Wallmount Enclosure

Features

- Provides fast access to conventional screw clamp type enclosures.
- Installs on clamp bracket in place of screw on 1418, 1418N4, 1447N4, and 1422N4 Series enclosures.
- Entire assembly is 304 stainless steel.
- Set of two.

Part No.	1418QR

Distributed by Gross Automation | +1 (262) 252-1600. | hammondsales@grossautomation.com

Technical references and CAD downloads available at www.hammondmfg.com

All dimensions in inches unless specified otherwise

© Hammond Manufacturing

Type 12/4, 4X Handle Kits

Features

- Durable zinc die cast or stainless steel
- Removable handle stop for clockwise / counter-clockwise operation
- Textured powder coat Black finish on zinc cast handle
- Maintains NEMA rating of enclosure
- Padlock “trigger” design for security requirements
- Optional key lock or defeater available (key lock versions include 2 keys)
- Handle can be used on other Hammond enclosures as field installation or installed at factory … contact Hammond

Part No.	Description	Material	NEMA Rating
MHK1	6” PADLOCKING 1PT. LATCH	Zinc	12, 4
MHK2	6” PADLOCKING 3PT < 60”	Zinc	12, 4
MHK3	6” PADLOCKING 3PT > 60”	Zinc	12, 4
MHKD1	6” PADLOCKING DEFEATER 1PT LATCH	Zinc	12, 4
MHKD2	6” PADLOCKING DEFEATER 3PT < 60”	Zinc	12, 4
MHKD3	6” PADLOCKING DEFEATER 3PT > 60”	Zinc	12, 4
MHKL1	6” KEYED PADLOCKING 1PT LATCH	Zinc	12, 4
MHKL2	6” KEYED PADLOCKING 3PT < 60”	Zinc	12, 4
MHKL3	6” KEYED PADLOCKING 3PT > 60”	Zinc	12, 4
MHK1SS	6” SS PADLOCKING 1PT LATCH	316 SS	4X
MHK2SS	6” SS PADLOCKING 3PT LATCH < 60”	316 SS	4X
MHK3SS	6” SS PADLOCKING 3PT LATCH > 60”	316 SS	4X
MHKD1SS	6” SS PADLOCKING DEFEATER 1PT LATCH	316 SS	4X
MHKD2SS	6” SS PADLOCKING DEFEATER 3PT < 60”	316 SS	4X
MHKD3SS	6” SS PADLOCKING DEFEATER 3PT > 60”	316 SS	4X
MHKL1SS	6” SS KEYED PADLOCKING 1PT LATCH	316 SS	4X
MHKL2SS	6” SS KEYED PADLOCKING 3PT < 60”	316 SS	4X
MHKL3SS	6” SS KEYED PADLOCKING 3PT > 60”	316 SS	4X

Type 1 Lock Kit

Features

- Installs in place of the existing slotted latch, or in cutout hole provided.
- Reversible cam position for other applications.
- Maintains NEMA1 rating.

Part No.	Fits Enclosure Series
1427LKN1	1420, N1A
N1JLK	N1J, N1W, CHKO, N1WF, SWB

Distributed by Gross Automation | +1 (262) 252-1600. | hammondsales@grossautomation.com

Technical references and CAD downloads available at www.hammondmfg.com

All dimensions in inches unless specified otherwise

Quality Products. Service Excellence.
© Hammond Manufacturing
Canada: 519.822.2960 or 905.456.3770 USA: 716.630.7030
Data Subject to change without notice

Type 12 Handle Kits

Features

- Designed for field installation on most 1418 Series single door enclosures (does not fit 1418 J Series).
- Available with key locking and non-locking handles.
- Single point kits include a handle and latch cam.
- Three point kits include a handle, latch cam, latch rods and adjustable rod guides.
- Latch rod ends have rollers for easier door closing.
- All parts are plated or painted for corrosion resistance.
- Note: AHK handle design shown - see individual CAD images for exact representation of each version.

Tee Locking Handle	Description
THK1	1 point latch
THK2	3 point latch 48" and under
THK3	3 point latch 60" and over

Locking Handle	Handle Rotation
AHKL1	counter clockwise
AHKL2	counter clockwise
AHKL3	counter clockwise

Non-Locking Handle	Handle Rotation
AHK1	clockwise
AHK2	clockwise
AHK3	clockwise

Type 4 Hardware Kits

Features

- When used as instructed, kits maintain the UL/CSA Type rating of Hammond enclosures which unapproved hardware will not.
- Screws require hex driver making them virtually tamper proof.
- Kit includes 50 stainless steel screws, sealing washers and nuts with one hex driver per kit.
- Offered in 8-32, 10-32 and ¼-20 at various lengths.

Part No.	Description
1421N4AA50	8-32 x ½" Kit
1421N4AB50	8-32 x 1" Kit
1421N4BA50	10-32 x ½" Kit
1421N4BB50	10-32 x 1" Kit
1421N4CA50	¼-20 x 5/8" Kit
1421N4CB50	¼-20 x 1" Kit

Type 4, 12 Lock Kit

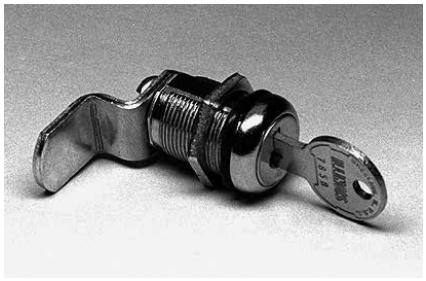

Features

- Designed for installation on most 1418 Series single door enclosures (does not fit 1418 J Series).
- Requires a drilled or punched hole to receive cylinder lock.
- Internal "0" ring provides dust and water tight construction.
- Maintains NEMA rating.

Part No.	1427LKN4

Distributed by Gross Automation | +1 (262) 252-1600. | hammondsales@grossautomation.com

Technical references and CAD downloads available at www.hammondmfg.com

All dimensions in inches unless specified otherwise

© Hammond Manufacturing

Ground Lugs

Features

- Dual L16 type aluminum lug.
- 1 1/8" wide x 1 3/16" long.
- 0.263" diameter hole for mounting the lug.
- Provides excellent grounding.
- Accepts wire sizes from 1/0 to 14.
- Packaged individually.
- Mounting hardware not included (requires drilling of bus bar).

Part No.	DNGL

Ground Wire Kits

Features

- 12" or 16" long - 10 Gauge Copper Wire.
- Terminated with crimped on terminals.
- Terminal hole is 0.256" diameter.
- Includes mounting hardware for both 1/4-20 or 10-32 ground studs
- Includes stick-on grounding symbols (two for each jumper)

Part No.	Description	Length
GRDKIT01	Includes (2) ground cables.	12"
GRDKIT02	Includes (6) ground cables.	16"
GRDKIT03	Includes (1) ground cable with #10 hardware only.	12"
GRDKIT04	Includes (4) ground cables with quick disconnecting terminals.	12"

Padlock Adaptor

Eclipse & Series 2000

Features

- For use with EN4SD /S2000 Series Enclosures.
- Padlock adaptor fits directly over the slotted quarter turn preventing access.
- 14 gauge 304 stainless steel.
- Stainless steel mounting hardware provided
- Once installed, the bolts cannot be removed without the door open.
- Easy installed in the field.
- Padlock not included.
- Maintains UL/CSA Type 4, 4X rating.

Part No.	EPA

Padlock Adaptor

EJ Series

Features

- For use with Eclipse Junior (EJ) Series enclosures.
- Padlock adapter fits directly over the slotted quarter turn preventing access.
- 2mm thick 14 gauge stainless steel.
- Stainless steel mounting hardware provided.
- Once installed, the bolts cannot be removed without the door open.
- Easy installed in the field.
- Padlock not included.
- Maintains UL/CSA Type 4, 4X rating.

Part No.	EJPA

Distributed by Gross Automation | +1 (262) 252-1600. | hammondsales@grossautomation.com

Technical references and CAD downloads available at www.hammondmfg.com

All dimensions in inches unless specified otherwise

© Hammond Manufacturing

Data Subject to change without notice

Quarter Turn Inserts and Keys

Features

- For Eclipse and Series 2000 Enclosures
- Field installable inserts replace standard quarter turn slot.
- Available in 7mm square and triangle formats, as well as slotted.
- Maintains NEMA, UL and CSA 12, 4 and 4X ratings.
- Square and triangle inserts provide extra security since standard screw drivers cannot open.
- Keys sold separately from inserts.

Part No.	Description
2SQI7	7mm square insert, black
2SQK7	7mm square key, fits 2SQI7
2TRI7	7mm triangle insert, black
2TRK7	7mm triangle key, fits 2TRI7
2SLI	Slotted insert, black

Quarter Turn Assemblies

Features

- Field installable.
- Interchangeable with standard quarter turn latches on Eclipse/Eclipse Jr series.
- Maintains NEMA, UL and CSA ratings as noted.

Part No.	Description	Material	NEMA Rating	For Use With
EQTRL [1]	Locking Qtr Turn	Zinc Die/Chrome	n/a	ESP Swing Panel (internal use only)
2QTR	Slotted Qtr Turn	Zinc Die/Black	12, 4	EN4SD Series
2SSQTR	Slotted Qtr Turn	Stainless steel	12, 4, 4X	EN4SD Series
2WKL	Wing knob lock	Zinc Die/Black	12, 4	EN4SD Series
2QPL	Padlockable quarter turn latch	Zinc Die/Black	12, 4	EN4SD Series
EJQTR	Slotted Qtr Turn	Zinc Die/Black	12, 4	EJ Series
EJSSQTR	Slotted Qtr Turn	Stainless Steel	12, 4, 4X	EJ Series
EJWKL	Key Locking Wing Knob Latch	Zinc Die/Black	12, 4	EJ Series
EJWKNL	Non-Locking Wing Knob Latch	Zinc Die/Black	12, 4	EJ Series

[1] For use with Swing Frame/Panel

Ground Stud Kit

Features

- Ground Lug provides continuous ground through enclosure body
- O-ring seals securely within a precision groove outside dimension 0.875”
- Brass 3/8-16 thread both ends
- 1” threaded portion
- Mounting hardware included (requires drilling of .425” hole)

Part No.	GRDT375

Distributed by Gross Automation | +1 (262) 252-1600. | hammondsales@grossautomation.com

Technical references and CAD downloads available at www.hammondmfg.com

All dimensions in inches unless specified otherwise

© Hammond Manufacturing

Canada: 519.822.2960 or 905.456.3770 USA: 716.630.7030

Data Subject to change without notice

Eclipse Replacement Hinge Pins

- These are supplied with enclosure but offered here as replacements should originals be misplaced.
- Stainless steel
- Packaged in quantities of 5.

Part No.	EPINSS

Hole Plugs

Features

- Designed to seal unused pushbutton holes, conduit openings and knockout holes against dust, oil and water.
- Standard Pushbutton size is 30.5mm
- Steel Hole Plug
  - Available in 12 sizes.
  - Finished in gray.
  - Oil resistant gasket.
  - Secured with an 10-24 x 0.55” threaded stud and plated wing nut.
- Stainless Steel Hole Plugs
  - Available in 8 sizes.
  - Finished in brushed natural 304 stainless steel finish.
  - Oil resistant gasket.
  - Secured with an 10-24 x 0.55” threaded stud and plated wing nut.

Stainless Steel

Part No.	Description	Max Hole Diameter	Plug Diameter
HP22SS	22mm Pushbutton	0.88	1.22
HP50SS	.5” Conduit	0.88	1.38
HP75SS	.75” Conduit	1.06	1.56
HPBSS	Std. Pushbutton	1.25	1.75
HP100SS	1” Conduit	1.38	1.88
HP125SS	1.25” Conduit	1.69	2.19
HP150SS	1.5” Conduit	2.00	2.50
HP200SS	2” Conduit	2.50	3.00

Steel

Part No.	Description	Max Hole Diameter	Plug Diameter
HP22	22mm Pushbutton	0.88	1.22
HP50	.5” Conduit	0.88	1.38
HP75	.75” Conduit	1.06	1.56
HPB	Std. Pushbutton	1.25	1.75
HP100	1” Conduit	1.38	1.88
HP125	1.25” Conduit	1.69	2.19
HP150	1.5” Conduit	2.00	2.50
HP200	2” Conduit	2.50	3.00
HP250	2.5” Conduit	3.00	3.50
HP300	3” Conduit	3.62	4.12
HP350	3.5” Conduit	4.12	4.62
HP400	4” Conduit	4.62	5.12

Distributed by Gross Automation | +1 (262) 252-1600. | hammondsales@grossautomation.com

Technical references and CAD downloads available at www.hammondmfg.com

All dimensions in inches unless specified otherwise

Quality Products. Service Excellence.
© Hammond Manufacturing
Canada: 519.822.2960 or 905.456.3770 USA: 716.630.7030
Data Subject to change without notice

Hole Plugs

Type 4X Stainless Steel - UR/cUR

Features

- Designed to seal unused pushbutton holes, conduit openings and knockout holes against dust, oil and water.
- Standard Pushbutton size is 30.5mm
- Available in 8 sizes.
- Finished in brushed natural 304 stainless steel.
- Oil resistant gasket.
- Secured with an 10-24 x 0.55" threaded stud and stainless steel wing nut.
- Recognized component UR & cUR
  - Type 1, 3, 3R, 4, 4X, 12 and 13

Part No.	Description	Max Hole Diameter	Plug Diameter
HP22SSN4	22mm Pushbutton	0.88	1.22
HP50SSN4	.5" Conduit	0.88	1.38
HP75SSN4	.75" Conduit	1.06	1.56
HPBSSN4	30mm Pushbutton	1.25	1.75
HP100SSN4	1" Conduit	1.38	1.88
HP125SSN4	1.25" Conduit	1.69	2.19
HP150SSN4	1.5" Conduit	2.00	2.50
HP200SSN4	2" Conduit	2.50	3.00

Hole Plugs

Type 4X Non-metallic - UR/cUR

Features

- Designed to seal unused pushbutton holes, conduit openings and knockout holes against dust, oil and water.
- Standard Pushbutton size is 30.5mm
- Available in 11 sizes.
- Available in 2 color options - ANSI 61 Gray (GY) & RAL7035 Light Gray (LG)
- Compatible with enclosure wall thickness from 16 gauge to 1/4"
- Self centering, anti-rotational design for fast and easy one person installation, no tools required
- Recognized component for use with UL & CSA listed enclosures
  - Type 1, 3, 3R, 4, 4X
- Molded in polycarbonate with neoprene/EPDM gasket material

RAL7035 Part No.	ANSI 61 Part No.	Description	Plugged Hole Diameter Range	Wall Thickness Range	External Dia.
HP12PCLG	**HP12PCGY**	Pilot Light (.50)	0.50 - 0.81	0.06 - 0.25	1.12
HP50PCLG	**HP50PCGY**	.5" Conduit (.875) 22mm PB (.886)	0.81 - 0.94	0.06 - 0.25	1.25
HP75PCLG	**HP75PCGY**	.75" Conduit (1.109) 30mm PB (1.21)	1.00 - 1.31	0.06 - 0.25	1.62
HP100PCLG	**HP100PCGY**	1" Conduit (1.375)	1.38 - 1.62	0.06 - 0.25	1.92
HP125PCLG	**HP125PCGY**	1.25" Conduit (1.734)	1.69 - 1.88	0.06 - 0.25	2.18
HP150PCLG	**HP150PCGY**	1.5" Conduit (1.984)	2.00 - 2.19	0.06 - 0.25	2.50
HP200PCLG	**HP200PCGY**	2" Conduit (2.469)	2.50 - 2.75	0.06 - 0.25	3.12
HP250PCLG	**HP250PCGY**	2.5" Conduit (2.969)	2.88 - 3.12	0.06 - 0.25	3.50
HP300PCLG	**HP300PCGY**	3" Conduit (3.594)	3.50 - 3.75	0.06 - 0.25	4.12
HP350PCLG	**HP350PCGY**	3.5" Conduit (4.125)	4.00 - 4.25	0.06 - 0.25	4.62
HP400PCLG	**HP400PCGY**	4" Conduit (4.641)	4.50 - 4.75	0.06 - 0.25	5.12

Distributed by Gross Automation | +1 (262) 252-1600. | hammondsales@grossautomation.com

Technical references and CAD downloads available at www.hammondmfg.com

All dimensions in inches unless specified otherwise

© Hammond Manufacturing

Eclipse DIN Rail Mounting Kit

- Field installable.
- Mounts directly to panel collar studs (panel not required).
- Accepts optional DIN rails.
- DIN rails available separately.
- Zinc plated, yellow dichromate.

Part No.	Length
2DMK12	10.00
2DMK16	14.00
2DMK20	18.00
2DMK24	22.00
2DMK30	28.00

Eclipse DIN Rails

- Field installable.
- Includes a set of 3 plated rails.
- Available in 3 industry standard profiles - DIN 1, DIN 3, and CENELEC.
- DIN rail mounting kit required for installation.
- Rails have a 0.28 x 1.25 oblong slot on each end.
- Zinc plated.

AsymmetricDIN 1 Profile	Symmetric DIN 3 Profile	Cenelec Profile	
Part No.	Part No.	Part No.	Length
2D1K12	2D2K12	2DCK12	9.25
2D1K16	2D2K16	2DCK16	13.25
2D1K20	2D2K20	2DCK20	17.25
2D1K24	2D2K24	2DCK24	21.25
2D1K30	2D2K30	2DCK30	27.25

Eclipse Handles

- Field installable.
- Interchangeable with standard quarter turn latches.
- Maintain NEMA, UL and CSA ratings as noted.

Part No.	Description	Material	NEMA Rating
EHTL	Locking T Handle	Zinc Die/Black	12, 4
EHLL	Locking L Handle	Zinc Die/Black	12, 4
EHLNL	Non Locking L Handle	Zinc Die/Black	12, 4
EHLPL	Padlockable L Handle	Zinc Plated	12
EHLPLSS	Padlockable L Handle	Stainless Steel	12, 4, 4X
EHLNLSS	Non Locking L Handle	Stainless Steel	12, 4, 4X
EHLLSS	Locking L Handle	Stainless Steel	12, 4, 4X

Distributed by Gross Automation | +1 (262) 252-1600. | hammondsales@grossautomation.com

Technical references and CAD downloads available at www.hammondmfg.com

All dimensions in inches unless specified otherwise

Quality Products. Service Excellence.
© Hammond Manufacturing
Canada: 519.822.2960 or 905.456.3770 USA: 716.630.7030
Data Subject to change without notice

Eclipse Mounting Foot Kit

- Maintains UL, CSA and NEMA ratings.
- Field installable.
- New triangular flanges prevent the foot from rotating
- Foot can still be mounted sideways as well as top/bottom
- Available in mild, 304SS and 316SS
- Packaged in quantities of four
- Replaces Part Numbers: EZPMF, ESSMF and ES16MF

Part No.	Material
EZPMFHD	Clear Zinc Plated, mild steel
ESSMFHD	Type 304 Stainless
ES16MFHD	Type 316 Stainless

Eclipse Rear Mounting Hole Plugs

- Used to plug rear mounting holes for Eclipse series
- Snap in plug designed for rear .50” mounting hole
- Packaged in quantities of 40

Part No.	EN4PLUG40

PJU/PCJ Moulded Replacement Polycarbonate Flange

- Sold in pairs.

Part No.	PJU/PCJ Flange Fits
PJFPUWM6	6x6, 8x6
PJFPUWM108	10x8
PJFPUWM1210	12x10
PJFPUWM1412	14x12
PJFPUWM1614	16x14
PJFPUWM1816	18x16
PJFPUWM2016	20x16

© Hammond Manufacturing

PJU/PCJ Moulded Replacement Polycarbonate Feet

- Sold in sets of 4.

Part No.	PJU/PCJ Feet Fits
PJW4NUFS	6x6 through 14x12
PJW4NULFS	16x14 through 20x16

PJ Stainless Replacement Mounting Feet

- 316 Stainless sold in sets of 4.

Part No.	304 SS PJ Feet Fits
PJW4NFS	6x6 through 20x16
PJW4NLS	24x20 through 30x24

M6 Screw with Hex/Phillips Head

Features

- M6 x 0.4724 inch (13mm) length steel screws.
- 25/64 (10mm) Hex Phillips head screws.
- Zinc plated finish.
- Designed for use with the HMEGS but can be used for rack mount applications.
  - Please note that when used for rack mount applications, screw head exceeds rack unit space.
- Packaged in a reusable jar.

Part No.	Qty Included	Screw Head Diameter	Screw Head Height	Screw Length
1421HPM625	25 Screws	0.51	0.23	0.47

© Hammond Manufacturing

Washdown Quarter Turn Assemblies

Waterfall Series Accessory

Latch Features

- Replaces standard quarter turn provided with enclosure
- Unique no-crevice design ideal for food and beverage applications
- 316L stainless steel construction
- Red, silicon O-Ring
- Sold individually

Latch Key Features

- Hollow, female key designed for use with EQTFG
- Sold individually

Part No.	Description
EQTFG	Quarter Turn Latch (ea.)
EFGK	Key (ea.)

*Maintains NSF Rating when installed on NSF Rated Enclosures

Wallmount Stand-offs

Waterfall Series Accessory

Features

- Provides space between enclosure and mounting surface
- Installs into pre-drilled mounting holes in rear of enclosure
- Offered in several lengths
- 316L stainless steel construction
- Set of 4

Part No.	Description
ST1MFSS316	1” Stand-off
ST2MFSS316	2” Stand-off
ST4MFSS316	4” Stand-off
ST6MFSS316	6” Stand-off

PJ/PJU/PCJ Replacement Hardware Kits

Part No.	Quantity	Description
PJLKIT316	1	Snap latch for PJ series with rivets and screws
PJTKIT316	1	Twist latch for PJ series with rivets and screws
PJUTKIT316	1	Twist latch for PJU series with rivets and screws
PJSKIT316	20	Cover screws for PJ, PJU, PCJ
PCJLLPSH	1	Snap latch 316 for PJU & PCJ series with moulded keeper
PCJLTPSH	1	Twist latch 316 for PJU & PCJ series with moulded keeper
PCJLLPNH	1	Snap latch non-metallic for PJU & PCJ series with moulded keeper
PCJHINGECLIP	2	Hinge clips for PCJ

© Hammond Manufacturing

Mechanical Interlock

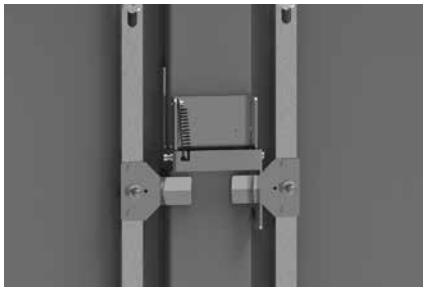

Application

- Designed to mechanically interlock doors on 2 door cabinets featuring handles and a center-post design. Cam on slave door held in place until Master door opened. Either door can be made master door with this kit.
- Ideal for use with Hammond series that do not include a mechanical interlock as standard.
- Can be installed on 1422N4 (mild or stainless steel), HN4FM (mild or stainless steel), HN4WM (mild or stainless steel).

Standards

- Does not compromise approval rating of enclosure.

Construction

- Kit includes: Base plate, spring, right and left slave bracket (user chooses appropriate), mounting hardware
- Formed from 10 gauge 304 stainless steel
- Finish is unpainted

Part No.	MIKIT

Inner Panels

1414, EJ, HJ and PJ Series Enclosures

Features

- Steel panels are 14 gauge steel and are finished in white.
- Fiberglass panels in NEMA sizes.
- Aluminum panels are 0.080 type 5052 H-32 aluminum, unpainted.
- Galvanized panels are 14 gauge unpainted galvanized steel.
- Stainless steel panels are 14 gauge and are brushed 304 SS.
- Mounting hardware is included with the enclosure.
- Steel panels and mounting hardware are included with 1414 Series enclosures.
- Galvanized panels and mounting hardware are included with the EJ Series enclosures.
- Mounting hardware is included with PJ Series enclosures, order panel separately.

							For Use with 1414 and EJ		For Use with PJ Series	
Steel Part No.	Fiberglass Part No.	Aluminum Part No.	Galv. Steel Part No.	Stainless Steel Part No.	Panel L	Panel W	H	W	H	W
14R0503		14A0503	14G0503	14R0503SS	4.88	2.88	6.00	4.00	-	-
14R0505	14F0505	14A0505	14G0505	14R0505SS	4.88	4.88	6.00	6.00	7.04	7.04
14R0705	14F0705	14A0705	14G0705	14R0705SS	6.75	4.88	8.00	6.00	8.94	7.06
14R0707		14A0707	14G0707	14R0707SS	6.75	6.88	8.00	8.00	-	-
14R0907	14F0907	14A0907	14G0907	14R0907SS	8.75	6.88	10.00	8.00	11.08	9.20
14R0909		14A0909	14G0909	14R0909SS	8.75	8.88	10.00	10.00	-	-
14R1105		14A1105	14G1105		10.75	4.88	12.00	6.00	-	-
14R1109	14F1109	14A1109	14G1109	14R1109SS	10.75	8.88	12.00	10.00	13.08	11.20
14R1111	14F1111	14A1111	14G1111	14R1111SS	10.75	10.88	12.00	12.00	-	-
14R1307		14A1307	14G1307		12.75	6.88	14.00	8.00	-	-
14R1311	14F1311	14A1311	14G1311	14R1311SS	12.75	10.88	14.00	12.00	15.08	13.20
14R1509		14A1509	14G1509		14.75	8.88	16.00	10.00	-	-
14R1513	14F1513	14A1513	14G1513	14R1513SS	14.75	12.88	16.00	14.00	17.22	15.34
P1868	F1868	A1868			16.88	14.88	-	-	19.34	17.34
P2068	F2068	A2068			18.44	14.44	-	-	20.94	16.94

Distributed by Gross Automation | +1 (262) 252-1600. | hammondsales@grossautomation.com

Technical references and CAD downloads available at www.hammondmfg.com

All dimensions in inches unless specified otherwise

Quality Products. Service Excellence.
© Hammond Manufacturing
Canada: 519.822.2960 or 905.456.3770 USA: 716.630.7030
Data Subject to change without notice

Inner Panels

1418, 1447, PJW, and PHW Wallmount Enclosures

Features

- Steel panels are 12 gauge steel and are finished in white.
- Galvanized panels are 12 gauge unpainted galvanized steel.
- Stainless steel panels are 12 gauge and are brushed 316 SS.
- Aluminum panels are 5052-H32 aluminum alloy.
- Larger panels have two or four formed flanges.
- Some larger panels are 10 gauge.
- Panel mounting hardware not included (provided with enclosure).

Steel	Galv. Steel	Stainless Steel	Aluminum	Panel		For Use With Enclosure	
Part No.	Part No.	Part No.	Part No.	L	W	H	W
18P0909	18G0909			9.00	9.00	12.00	12.00
18P1309	18G1309	18P1309S16	18A1309	13.00	9.00	16.00	12.00
18P1313	18G1313	18P1313S16	18A1313	13.00	13.00	16.00	16.00
18P1515	18G1515			15.00	15.00	18.00	18.00
18P1709	18G1709			17.00	9.00	20.00	12.00
18P1713	18G1713	18P1713S16	18A1713	17.00	13.00	20.00	16.00
18P1717	18G1717	18P1717S16	18A1717	17.00	17.00	20.00	20.00
18P2109	18G2109			21.00	9.00	24.00	12.00
18P2113	18G2113	18P2113S16		21.00	13.00	24.00	16.00
18P2117	18G2117	18P2117S16	18A2117	21.00	17.00	24.00	20.00
18P2121	18G2121	18P2121S16	18A2121	21.00	21.00	24.00	24.00
18P2709	18G2709			27.00	9.00	30.00	12.00
18P2713	18G2713			27.00	13.00	30.00	16.00
18P2717	18G2717	18P2717S16		27.00	17.00	30.00	20.00
18P2721	18G2721	18P2721S16	18A2721	27.00	21.00	30.00	24.00
18P2727	18G2727	18P2727S16		27.00	27.00	30.00	30.00
18P3321	18G3321	18P3321S16	18A3321	33.00	21.00	36.00	24.00
18P3327	18G3327	18P3327S16	18A3327	33.00	27.00	36.00	30.00
18P3333	18G3333	18P3333S16		33.00	33.00	36.00	36.00
18P3921	18G3921			39.00	21.00	42.00	24.00
18P3927	18G3927	18P3927S16		39.00	27.00	42.00	30.00
18P3933	18G3933	18P3933S16		39.00	33.00	42.00	36.00
18P4521	18G4521			45.00	21.00	48.00	24.00
18P4527	18G4527			45.00	27.00	48.00	30.00
18P4533	18G4533	18P4533S16	18A4533	45.00	33.00	48.00	36.00
18P5721	18G5721			57.00	21.00	60.00	24.00
18P5733	18G5733	18P5733S16	18A5733	57.00	33.00	60.00	36.00
18P6927	18G6927			69.00	27.00	72.00	30.00
18P6933	18G6933			69.00	33.00	72.00	36.00

Distributed by Gross Automation | +1 (262) 252-1600. | hammondsales@grossautomation.com

Technical references and CAD downloads available at www.hammondmfg.com

All dimensions in inches unless specified otherwise

© Hammond Manufacturing

Inner Panels

Eclipse Series Enclosures

Features

- Larger than standard NEMA panel used in same sized enclosure.
- 12gauge steel construction.
- Larger sizes have 2 or 4 formed flanges for added strength.
- Slotted corner design for easier mounting.
- Finished in white or unpainted galvanized.

Mild Steel Part No.	Galvanized Part No.	Size D	Size E	Gauge
EP1210	EPG1210	10.20	8.20	12
EP1212	EPG1212	10.20	10.20	12
EP1224	EPG1224	10.20	22.20	12
EP1612	EPG1612	14.20	10.20	12
EP1616	EPG1616	14.20	14.20	12
EP1620	EPG1620	14.20	18.20	12
EP2012	EPG2012	18.20	10.20	12
EP2016	EPG2016	18.20	14.20	12
EP2020	EPG2020	18.20	18.20	12
EP2024	EPG2024	18.20	22.20	12
EP2412	EPG2412	22.20	10.20	12
EP2416	EPG2416	22.20	14.20	12
EP2420	EPG2420	22.20	18.20	12
EP2424	EPG2424	22.20	22.20	12
EP2430	EPG2430	22.20	28.20	12
EP2442	EPG2442	22.20	40.20	12
EP2448	EPG2448	22.20	46.20	12
EP3012	EPG3012	28.20	10.20	12
EP3016	EPG3016	28.20	14.20	12
EP3020	EPG3020	28.20	18.20	12
EP3024	EPG3024	28.20	22.20	12

Mild Steel Part No.	Galvanized Part No.	Size D	Size E	Gauge
EP3030	EPG3030	28.20	28.20	12
EP3036	EPG3036	28.20	34.20	12
EP3042	EPG3042	28.20	40.20	12
EP3048	EPG3048	28.20	46.20	12
EP3060	EPG3060	28.20	58.20	12
EP3624	EPG3624	34.20	22.20	12
EP3630	EPG3630	34.20	28.20	12
EP3636	EPG3636	34.20	34.20	12
EP3642	EPG3642	34.20	40.20	12
EP3648	EPG3648	34.20	46.20	12
EP3660	EPG3660	34.20	58.20	12
EP4224	EPG4224	40.20	22.20	12
EP4230	EPG4230	40.20	28.20	12
EP4236	EPG4236	40.20	34.20	12
EP4824	EPG4824	46.20	22.20	12
EP4830	EPG4830	46.20	28.20	12
EP4836	EPG4836	46.20	34.20	12
EP4848	EPG4848	46.20	46.20	12
EP6036	EPG6036	58.20	34.20	12
EP7230	EPG7230	70.20	28.20	12
EP7236	EPG7236	70.20	34.20	12

Distributed by Gross Automation | +1 (262) 252-1600. | hammondsales@grossautomation.com

Technical references and CAD downloads available at www.hammondmfg.com

All dimensions in inches unless specified otherwise

Quality Products. Service Excellence.
© Hammond Manufacturing
Canada: 519.822.2960 or 905.456.3770 USA: 716.630.7030
Data Subject to change without notice

Inner Panels

1420 Series Enclosures

Features

- Panels and mounting hardware are included with 1420 Series enclosures.
- 12 gauge steel finished in white.

	Panel		For Use With Enclosure	
Part No.	L	W	H	W
20P1410	14.00	10.00	16.00	12.00
20P1814	18.00	14.00	20.00	16.00
20P1818	18.00	18.00	20.00	20.00
20P2218	22.00	18.00	24.00	20.00
20P2222	22.00	22.00	24.00	24.00
20P2818	28.00	18.00	30.00	20.00
20P2822	28.00	22.00	30.00	24.00
20P3422	34.00	22.00	36.00	24.00
20P3428	34.00	28.00	36.00	30.00
20P4022	40.00	22.00	42.00	24.00
20P4028	40.00	28.00	42.00	30.00
20P4034	40.00	34.00	42.00	36.00
20P4634	46.00	34.00	48.00	36.00

Inner Panels

HN4FM/1422 Series Floormount Enclosures

Features

- 22P5038 is formed from 12 gauge steel, all others are 10 gauge steel.
- Panels and mounting hardware are included with 1422 and HN4FM Series enclosures.
- Finished in white.

	Panel		For Use With Enclosure	
Part No.	L	W	H	W
22P5038	50.00	38.00	54.00	42.00
22P5644	56.00	44.00	60.00	48.00
22P5656	56.00	56.00	60.00	60.00
22P6856	68.00	56.00	72.00	60.00
22P6868	68.00	68.00	72.00	72.00

© Hammond Manufacturing

Inner Panels

PCJ Series Enclosures

Features

- 14 gauge steel panels are finished in white
- Aluminum panels are 0.080 type 5052 H-32 aluminium, unpainted
- Steel and Aluminium panels are sold seperate for the PCJ Series enclosures
- PVC (Polyvinyl Chloride) back panels are 0.188 material dark gray finish. Temperature up to 140° (60°C)
- Mounting hardware is included with PCJ Series enclosures, order panel separately

Mild Steel	Aluminum	PVC	Panel		For Use With PCJ Series	
Part No.	Part No.	Part No.	Length	Width	A	B
PCJR0505	PCJA0505	14PVC0505	4.81	4.81	5.93	6.16
PCJR0705	PCJA0705	14PVC0705	6.75	4.88	7.94	6.16
PCJR0808	PCJA0808	14PVC0707	6.75	6.88	7.94	8.15
PCJR0907	PCJA0907	14PVC0907	8.75	6.88	9.93	8.15
PCJR1109	PCJA1109	14PVC1109	10.75	8.88	11.92	10.15
PCJR1311	PCJA1311	14PVC1311	12.75	10.88	13.94	12.16
14R1513	14A1513	14PVC1513	14.75	12.88	15.98	13.98
P1868	A1868	14PVC1715	16.88	14.88	18.04	16.04

Inner Panels

N1J Series Enclosures

Features

- Replacement panels for N1J Series enclosures.
- Optional panels for C3R HCR SM Series enclosures.
- Made from 16 ga steel
- White powder finish

	Panel		For Use with Enclosure		
Part No.	L	W	H	W	# Folds
N1JP64	4.25	2.25	6.00	4.00	0
N1JP66	4.25	4.25	6.00	6.00	0
N1JP86	6.25	4.25	8.00	6.00	0
N1JP88	6.25	6.25	8.00	8.00	0
N1JP108	8.25	6.25	10.00	8.00	0
N1JP1010	8.25	8.25	10.00	10.00	0
N1JP1210	10.25	8.25	12.00	10.00	0
N1JP1212	10.25	10.25	12.00	12.00	0
N1JP1412	12.25	10.25	14.00	12.00	0
N1JP1612	14.25	10.25	16.00	12.00	0
N1JP2012	18.25	10.25	20.00	12.00	0

Distributed by Gross Automation | +1 (262) 252-1600. | hammondsales@grossautomation.com

Technical references and CAD downloads available at www.hammondmfg.com

All dimensions in inches unless specified otherwise

Quality Products. Service Excellence.
© Hammond Manufacturing
Canada: 519.822.2960 or 905.456.3770 USA: 716.630.7030
Data Subject to change without notice

Inner Panels

N1A Series Enclosures

Features

- 14 gauge steel Finished in white.
- Panels and mounting hardware are included with NIA Series enclosures.

	Panel		For Use with Enclosure	
Part No.	L	W	H	W
AP1612	13.00	10.50	16.00	12.00
AP1616	13.00	14.50	16.00	16.00
AP1620	13.00	18.50	16.00	20.00
AP2016	17.00	14.50	20.00	16.00
AP2020	17.00	18.50	20.00	20.00
AP2024	17.00	22.50	20.00	24.00
AP2416	21.00	14.50	24.00	16.00
AP2420	21.00	18.50	24.00	20.00
AP2424	21.00	22.50	24.00	24.00
AP3020	26.00	18.50	30.00	20.00
AP3024	26.00	22.50	30.00	24.00
AP3030	26.00	28.50	30.00	30.00
AP3624	32.00	22.50	36.00	24.00
AP3630	32.00	28.50	36.00	30.00
AP4224	38.00	22.50	42.00	24.00
AP4230	38.00	28.50	45.00	30.00
AP4236	38.00	34.50	42.00	36.00
AP4836	44.00	34.50	48.00	36.00

Perforated Inner Panels

1418, 1447, PJW, and PHW Wallmount Enclosures

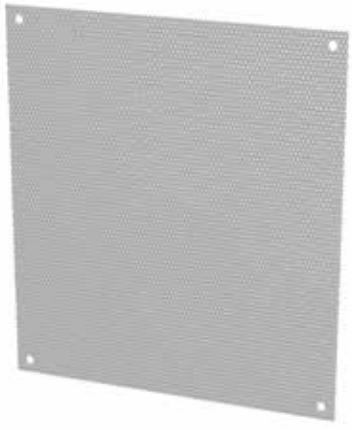

Features

- For use with 1418, 1447, PJW and PHW enclosures
- Made from 16 ga steel
- Accepts self tapping screws eliminating timely measurement, marking and drilling of component mounting holes
- 1/8” dia holes on 1/4” staggered centers
- ANSI 61 gray powder finish

	Panel		For Use with Enclosure		
Part No.	L	W	H	W	# Folds
18P1309PP	13.00	9.00	16.00	12.00	0
18P1313PP	13.00	13.00	16.00	16.00	0
18P1515PP	15.00	15.00	18.00	18.00	0
18P1713PP	17.00	13.00	20.00	16.00	0
18P1717PP	17.00	17.00	20.00	20.00	0
18P2117PP	21.00	17.00	24.00	20.00	0
18P2121PP	21.00	21.00	24.00	24.00	4
18P2721PP	27.00	21.00	30.00	24.00	4
18P2727PP	27.00	27.00	30.00	30.00	4
18P3321PP	33.00	21.00	36.00	24.00	4
18P3327PP	33.00	27.00	36.00	30.00	4
18P3333PP	33.00	33.00	36.00	36.00	4

© Hammond Manufacturing

Inner Panels

1418FS and HN4FS Series Enclosures

- Formed from 10 gauge or 12 gauge steel.
- All double door width panels are 10 gauge steel.
- Width panels are available in full or half height.
- Depth panels are available in full height only.
- Depth and width panels are provided with all mounting hardware and center support where required.
- Half panel can be mounted in the top or bottom half of the enclosure.
- Finished in white.

Depth Panels

Part No.	Encl. Height	Encl. Min Depth	Panel W	Panel H
60FD14	60.00	18.00	14.00	48.00
72FD9	72.00	18.00	9.00	60.00
72FD14	72.00	18.00	14.00	60.00
72FD20	72.00	24.00	20.00	60.00
72FD26	72.00	36.00	26.00	60.00
90FD9	90.00	18.00	9.00	78.00
90FD14	90.00	18.00	14.00	78.00
90FD20	90.00	24.00	20.00	78.00
90FD26	90.00	36.00	26.00	78.00

Single Door Width Panels

Steel Part No.	Galv. Steel Part No.	Description	Enclosure	Panel Size
60TWFW	**60TWFWG**	Full Panel	60 x 24	48.00 x 20
60TWHW	**60TWHWG**	Half Panel		24.87 x 20
72WFW	**72WFWG**	Full Panel	72 x 24	60.00 x 20
72WHW	**72WHWG**	Half Panel		30.87 x 20
90YWFW	**90YWFWG**	Full Panel	90 x 24	78.00 x 20
90YWHW	**90YWHWG**	Half Panel		39.87 x 20
72XFW	**72XFWG**	Full Panel	72 x 30	60.00 x 26
72XHW	**72XHWG**	Half Panel		30.87 x 26
60TYFW	**60TYFWG**	Full Panel	60 x 36	48.00 x 32
60TYHW	**60TYHWG**	Half Panel		24.87 x 32
72YFW	**72YFWG**	Full Panel	72 x 36	60.00 x 32
72YHW	**72YHWG**	Half Panel		30.87 x 32
90YFW	**90YFWG**	Full Panel	90 x 36	78.00 x 32
90YHW	**90YHWG**	Half Panel		39.87 x 32

Double Door Width Panels

Steel Part No.	Galv. Steel Part No.	Description	Enclosure	Panel Size
60AWFW	**60AWFWG**	Full Panel	60 x 48	48.00 x 44
60AWHW	**60AWHWG**	Half Panel		24.88 x 44
72ZWFW	**72ZWFWG**	Full Panel	72 x 48	60.00 x 44
72ZWHW	**72ZWHWG**	Half Panel		30.88 x 44
72ZXFW	**72ZXFWG**	Full Panel	72 x 60	60.00 x 56
72ZXHW	**72ZXHWG**	Half Panel		30.88 x 56
72ZYFW	**72ZYFWG**	Full Panel	72 x 72	60.00 x 68
72ZYHW	**72ZYHWG**	Half Panel		30.88 x 68
90BWFW	**90BWFWG**	Full Panel	90 x 48	78.00 x 44
90BWHW	**90BWHWG**	Half Panel		39.88 x 44
90BYFW	**90BYFWG**	Full Panel	90 x 72	78.00 x 68
90BYHW	**90BYHWG**	Half Panel		39.88 x 68

Distributed by Gross Automation | +1 (262) 252-1600. | hammondsales@grossautomation.com

Technical references and CAD downloads available at www.hammondmfg.com

All dimensions in inches unless specified otherwise

Quality Products. Service Excellence.
© Hammond Manufacturing
Canada: 519.822.2960 or 905.456.3770 USA: 716.630.7030
Data Subject to change without notice

Perforated Inner Panels

N1A Series Enclosures

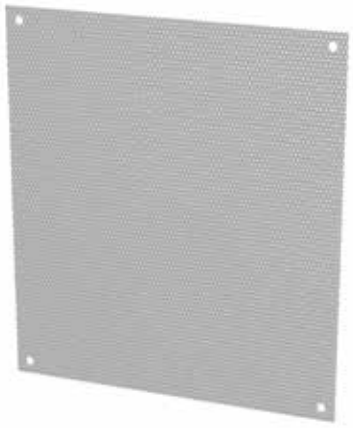

Features

- Made from 16 ga steel
- Accepts self tapping screws eliminating timely measurement, marking and drilling of component mounting holes
- 1/8" dia holes on 1/4" staggered centers
- ANSI 61 gray powder finish

	Panel		For Use with Enclosure		
Part No.	L	W	H	W	# Folds
AP1612PP	13.00	10.50	16.00	12.00	0
AP1616PP	13.00	14.50	16.00	16.00	0
AP1620PP	13.00	18.50	16.00	20.00	0
AP2016PP	17.00	14.50	20.00	16.00	0
AP2020PP	17.00	18.50	20.00	20.00	0
AP2024PP	17.00	22.50	20.00	24.00	0
AP2416PP	21.00	14.50	24.00	16.00	0
AP2420PP	21.00	18.50	24.00	20.00	0
AP2424PP	21.00	22.50	24.00	24.00	4
AP3020PP	26.00	18.50	30.00	20.00	4
AP3024PP	26.00	22.50	30.00	24.00	4
AP3030PP	26.00	28.50	30.00	30.00	4
AP3624PP	32.00	22.50	36.00	24.00	4
AP3630PP	32.00	28.50	36.00	30.00	4
AP4224PP	38.00	22.50	42.00	24.00	4

Perforated Inner Panels

N1J Series Enclosures

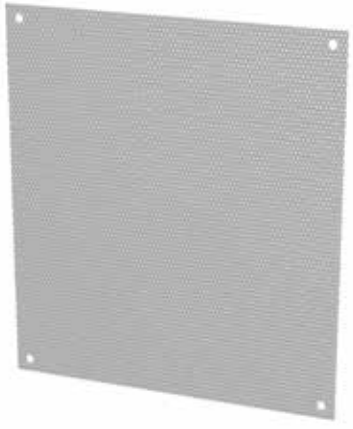

Features

- Made from 16 ga steel
- Accepts self tapping screws eliminating timely measurement, marking and drilling of component mounting holes
- 1/8" dia holes on 1/4" staggered centers
- ANSI 61 gray powder finish

	Panel		For Use with Enclosure		
Part No.	L	W	H	W	# Folds
N1JP66PP	4.25	4.25	6.00	6.00	0
N1JP86PP	6.25	4.25	8.00	6.00	0
N1JP88PP	6.25	6.25	8.00	8.00	0
N1JP108PP	8.25	6.25	10.00	8.00	0
N1JP1010PP	8.25	8.25	10.00	10.00	0
N1JP1210PP	10.25	8.25	12.00	10.00	0
N1JP1212PP	10.25	10.25	12.00	12.00	0
N1JP1412PP	12.25	10.25	14.00	12.00	0
N1JP1612PP	14.25	10.25	16.00	12.00	0
N1JP2012PP	18.25	10.25	20.00	12.00	0

Distributed by Gross Automation | +1 (262) 252-1600. | hammondsales@grossautomation.com

Technical references and CAD downloads available at www.hammondmfg.com

All dimensions in inches unless specified otherwise

© Hammond Manufacturing

Swing Panel Kit

Features

- Kits are used as accessory to standard Hammond panels (sold separately)
- Allows panel to be mounted in front part of enclosure
- Hinge permits access behind panel
- Sealing washers preserve approval rating of enclosure
- Panel not included.

Part No.	For Use With
SPB1	1414 Series where AxB is 8"x6" or larger (not compatible with 1414 screw cover series)
SPB1	EJ Series where AxB is 8"x6" or larger
SPB1	C3R-HCLO Series where AxB is 16x12 or smaller
SPB2	1418 Wallmount Series, HW Series
SPB2	C3R-HCLO Series where AxB is 16x16 or larger
SPB2	C3R-HCR Series where AxB is 16x12 or larger

Terminal Straps and Brackets

1414/EJ/PJ Series Enclosures

Features

- Used to provide convenient mounting for terminal blocks in 1414 Series enclosures and some sizes of "PJ" Series enclosures.
- Finished in white.

Bracket Assembly

- Each kit consists of two brackets.
- "C" channel construction provides easy alignment of terminal straps.

Terminal Strap

- 1.5" wide x 0.187" thick steel.
- Each strap includes spring locking hardware.
- Countersunk holes in straps provide extra terminal mounting space.

How to Order

- Each enclosure requires one bracket assembly kit and the required number of straps (Strap Part No. corresponds to enclosure dimension "A" and is mounted parallel to same, Bracket Part No. corresponds to enclosure dimension "B" and is mounted parallel to same).
- Example: For a PJ864L enclosure, order one 14B6 bracket assembly and a minimum of one 14B8 terminal strap kits. Additional terminal strap kits will provide additional mounting space.

Single Strap Part No.	L	Usable Mounting Space	Bracket (Pair) Part No.	W	A	B	C	Fits PJ Enclosure
14S8	6.19	4.30	14B6	6.00	5.00	4.25	1.55	PJ864...[1]
14S10	8.19	6.30	14B8	8.00	7.00	6.25	1.55	PJ1086...[1]
14S12	10.19	8.30	14B10	10.00	9.00	8.25	2.79	PJ12106...[1]
14S14	12.19	10.30	14B12	12.00	11.00	10.25	2.79	PJ14126...[1]
14S16	14.19	12.30	14B14	14.00	13.00	12.25	2.79	PJ16148...[1]

[1] Compatible with all latch types

© Hammond Manufacturing

Terminal Straps and Brackets

1418 Series Enclosures

Features

- Used to provide convenient mounting for terminal blocks, pneumatic controls or small relays in 1418 wallmount enclosures.
- Brackets may be installed horizontally or vertically in an enclosure if the size corresponds to enclosure length or width.
- Finished in white.

Bracket Assembly

- Each kit consists of two or three brackets per assembly.
- Brackets combined with collar stud length provide 3" minimum clearance from the rear of the enclosure.
- "C" channel construction provides easy alignment of terminal straps.

Terminal Strap

- 1.5" wide x 0.187" thick steel.
- Each strap includes spring locking hardware.
- Countersunk holes in straps provide extra terminal mounting space.

How to Order

- Each enclosure requires one bracket assembly kit and the required number of straps (order separately).
- Determine if strap will be mounted parallel to dimension "A" or "B". Choose the part number that corresponds to enclosure dimensions "A" or "B".
- When choosing a bracket assembly to be parallel to dimension "B" in an enclosure of 24", 30" or 36" width, determine if a two or three bracket assembly is required. When enclosures are 48" or greater on "A" dimension, 6 collar studs are used.
- Choose strap kit to correspond to the other enclosure dimensions.
- Order the number of kits equal to the number of straps required.

Bracket Assembly

Part No.	# of Brackets	L	B	Parallel Enclosure Dim
18B212	2	8.50	7.25	12
18B216	2	12.50	11.25	16
18B220	2	16.50	15.25	20
18B224	2	20.50	19.25	24
18B324	3	20.50	19.25	24
18B230	2	26.50	25.25	30
18B330	3	26.50	25.25	30
18B236	2	32.50	31.25	36
18B336	3	32.50	31.25	36

Strap

Part No.	L	Usable Mounting Space (L)
18S12	9.50	7.60
18S16	13.50	11.60
18S20	17.50	15.60
18S24	21.50	19.60
18S30	27.50	25.60
18S36	33.50	31.60
18S42	39.50	37.60
18S48	45.50	43.60
18S60	57.50	55.60
18S72	69.50	67.60

Distributed by Gross Automation | +1 (262) 252-1600. | hammondsales@grossautomation.com

Technical references and CAD downloads available at www.hammondmfg.com

All dimensions in inches unless specified otherwise

© Hammond Manufacturing

Eclipse Swing Panel

- Hinged panel allows access to internally mounted equipment.
- 12 gauge steel construction.
- Slotted quarter turn latches provide closure.
- Adding optional locking quarter turn latches (Part Number EQTRL) convert this to a dead front panel.
- Complete with 4-6" depth adjustment channels.
- Hardware kit maintains UL, CSA and NEMA ratings when field installed.
- Finished in white.

Part No.	Fits Enclosure Size (A x B)
ESP3020	30 x 20
ESP3024	30 x 24
ESP3030	30 x 30
ESP3624	36 x 24
ESP3630	36 x 30
ESP3636	36 x 36
ESP4236	42 X 36
ESP4824	48 X 24
ESP4836	48 X 36
ESP6036	60 X 36

Part No.	Fits Enclosure Size (A x B)
ESP1212	12 x 12
ESP1612	16 x 12
ESP1616	16 x 16
ESP1620	16 x 20
ESP2016	20 x 16
ESP2020	20 x 20
ESP2024	20 x 24
ESP2416	24 x 16
ESP2420	24 x 20
ESP2424	24 x 24

Swing Panel

- Hinged aluminum panel.
- Mounts at front of enclosure body.
- Field installed with no drilling required.

Use with PJU Series Enclosures

Part No.	Panel Dimensions Height	Width
PJSPU108	9.64	7.87
PJSPU1210	11.64	9.86
PJSPU1412	13.64	11.86
PJSPU1614	15.64	13.86
PJSPU1816	17.90	15.99
PJSPU2016	19.65	15.55

Use with PJ Series Raised Lid Enclosures

Part No.	Panel Dimensions Height	Width
PJSP108	9.50	7.50
PJSP1210	11.50	9.50
PJSP1212	11.50	11.37
PJSP1412	13.50	11.50
PJSP1614	15.50	13.50
PJSP1816	17.63	15.63
PJSP2016	19.25	15.25
PJSP2420	23.25	19.38
PJSP2424	23.38	23.25
PJSP3024	29.25	23.38

Distributed by Gross Automation | +1 (262) 252-1600. | hammondsales@grossautomation.com

Technical references and CAD downloads available at www.hammondmfg.com

All dimensions in inches unless specified otherwise

Quality Products. Service Excellence.
© Hammond Manufacturing
Canada: 519.822.2960 or 905.456.3770 USA: 716.630.7030
Data Subject to change without notice

Swing Panel

PCJ Series Accessory

Features

- Hinged aluminum panel installed on corner sliders allowing adjustable depth setting
- Can be installed hinged either right or left swing
- Field installed with no drilling required
- Mounting Hardware Included
- Material thickness 0.09”

HFPP Kit Part No.	Enclosure Base Part No.	A	B	C	D	E
PCJHFPP66	PCJ664	5.44	5.61	2.64	3.13	4.19
PCJHFPP86	PCJ864	7.44	5.61	4.64	3.13	6.19
PCJHFPP88	PCJ884	7.44	7.63	4.64	5.38	6.19
PCJHFPP108	PCJ1084	9.43	7.69	6.63	5.38	8.18
PCJHFPP1210	PCJ12106	11.55	9.58	8.63	7.33	10.13
PCJHFPP1412	PCJ14126	13.10	11.25	10.61	9.00	11.75
PCJHFPP1614	PCJ16148	14.75	12.88	12.33	12.88	13.44
PCJHFPP1816	PCJ181610	16.88	14.88	14.19	14.88	15.44

Replacement Hardware

Part Number	Description
PCJCB4	Corner block set of 4
PCJHFH	Hinge and screws set of 2

Eclipse Swing Frame

For use with Eclipse Enclosure Series

- Provides 19” rack mounting with full EIA spacing (punched holes).
- Hinges allow easy equipment access.
- Slotted quarter turn latches provide closure.
- Optional locking quarter turn latch available by ordering Part No. EQTRL
- Adding optional locking quarter turn latches provides added security.
- Complete with 4-6” depth adjustment channels.
- Mounting hardware sold separately.
- Hardware kit maintains UL, CSA and NEMA ratings when field installed.
- Finished in black.

Part No.	Fits Enclosure Size (AxB)	Rack Spacing Width	Rack Units
ESF2424	24x24	19.00	11U
ESF3024	30x24	19.00	14U
ESF3624	36x24	19.00	17U

Distributed by Gross Automation | +1 (262) 252-1600. | hammondsales@grossautomation.com

Technical references and CAD downloads available at www.hammondmfg.com

All dimensions in inches unless specified otherwise

© Hammond Manufacturing

Freestanding Enclosure 19" Swing Out Frames

1418FS and HN4FS Series Enclosures

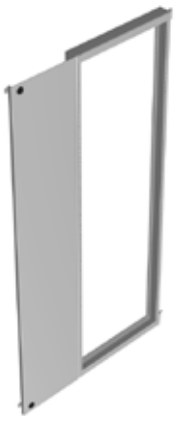

- Formed from 10 gauge steel, frames are drilled and tapped to EIA requirements for mounting standard 19" rack accessories.
- Designed for installation in 72" and 90" high enclosures. The swing frame pivots on 0.5" pins within the enclosure for easy access to the rear of rack mounted equipment.
- The frame positions at any depth within the enclosure and is fastened in the closed position with quarter turn fasteners.
- Swing frames may be mounted in 30" and 36" wide enclosures, or in 60" and 72" wide enclosures with an optional center panel support.
- One or two frames may be mounted in 30" and 36" wide enclosures with dual access, and 1,2,3 or 4 frames may be mounted in 60" and 72" wide dual access enclosures.
- Finished in black.

Part No.	A	B	C	Rack Units	Enclosure Height	Width Single Door
1418SFYY	78.50	31.80	12.14	44	90.00	36.00
1418SFY	60.50	31.80	12.14	33	72.00	36.00
1418SFX	60.50	25.82	6.14	33	72.00	30.00

Freestanding Enclosure Center Panel Supports

1418FS and HN4FS Series Enclosures

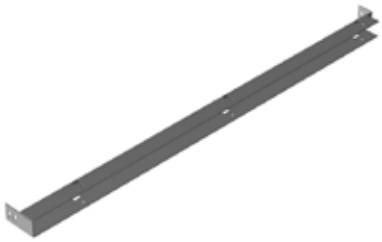

- Adapts panels, swing frames, and panel rails from single door enclosures so they can be used on double door enclosures.
- Suitable for single or dual access double door enclosures.
- Center panel support mounts into front to back mounting channels (top and bottom) found in two door enclosures.
- Allows a combination of two 20" panels in a 48" wide enclosure, two 26" panels in a 60" wide enclosure, or two 32" panels in a 72" wide enclosure.
- Width is adjustable from 1.91" to 2.34".
- Support may be positioned at any depth within the enclosure.
- Finished in white.

Part No.	Enclosure Ht.
1418ACS	60.00
1418ZCS	72.00
1418BCS	90.00

© Hammond Manufacturing

Eclipse Rack Panel

For use with Eclipse Enclosure Series

Features

- Provides internal 19” rack mounting with full EIA spacing (punched holes).
- Compatible with specific sizes of the Eclipse Series (EN4SD and ST versions)
- This is a 2 component system
  - Must order ERP brackets
  - Must order HLP swivel panel mounting components
- Maintains UL, CSA and NEMA ratings when field installed.
- Smooth black powder paint finish.
- RoHS Compliant.
- Manufactured in North America.

ERP Brackets

- Mount to internal mounting studs.
- Can be used whether an inner panel is installed or not.

HLP Panel Mounting Brackets

- Rack mounting units available in 4U (7.00”), 6U (10.50”) and 8U (14.00”).
- Rails pivot 180 degrees for easy equipment mounting.
- Includes starter pack of mounting hardware and panel installation hardware.

Compatible Enclosure Dimensions			ERP Brackets	HLP Swivel Rack Mount Brackets		
H	W	D	Part No.	4U Part No.	6U Part No.	8U Part No.
24.00	24.00	12.00	**ERP2424**	**HLP4UR**	n/a	n/a
24.00	24.00	16.00	**ERP2424**	**HLP4UR**	**HLP6UR**	n/a
24.00	24.00	20.00	**ERP2424**	**HLP4UR**	**HLP6UR**	**HLP8UR**
30.00	24.00	12.00	**ERP3024**	**HLP4UR**	n/a	n/a
30.00	24.00	16.00	**ERP3024**	**HLP4UR**	**HLP6UR**	n/a
30.00	24.00	20.00	**ERP3024**	**HLP4UR**	**HLP6UR**	**HLP8UR**
30.00	24.00	24.00	**ERP3024**	**HLP4UR**	**HLP6UR**	**HLP8UR**
36.00	24.00	12.00	**ERP3624**	**HLP4UR**	n/a	n/a

Freestanding Enclosure Panel Rails

1418FS and HN4FS Series Enclosures

- Provides 19” or 24” mounting capability.
- Sold in pairs.
- Formed from 10 gauge steel.
- Drilled and tapped 10-32 to EIA spacing of 0.5” - 0.63” - 0.63” - 0.5”.
- Finished in white.

Part No.	Panel Description	Enclosure	Width	Height Panel	U	V
1418TFHP	Full Height	60 x 24	19.00	49.00	3.78	7.78
1418THHP	Half Height			26.25	3.59	7.59
1418WFHP	Full Height	72 x 24	19.00	61.25	3.66	7.66
1418WHHP	Half Height			31.50	3.97	7.67
1418XFHP	Full Height	72 x 30	24.00	61.25	3.66	7.66
1418XHHP	Half Height			31.50	3.97	7.67
1418YYFHP	Full Height	90 x 24	19.00	78.75	3.91	7.91
1418YYHHP	Half Height			40.25	4.09	8.09

© Hammond Manufacturing

Mild Steel and Stainless Steel Window Kits

Features

- Maintain environmental protection level of Type 4, 4X (for stainless steel) as noted
- Window is 0.25" thick, UV resistant Polycarbonate.
- Frame is heavy gauge steel, or 304 stainless steel with integral weld studs and compression clips.
- Oil resistant neoprene gasket ensures a watertight seal.
- Finished in ANSI 61 gray recoatable powder or natural brushed stainless steel.

Part No.	Material	Window Dimensions A	Window Dimensions B	Recommended Cut-Out Size	
1481WN40503[1]	Steel	5.00	3.00	6.69	4.69
1481WN40905[1]	Steel	9.00	5.50	10.69	7.19
1481WN41303[1]	Steel	13.00	3.00	14.69	4.69
1481WN41308[1]	Steel	13.00	8.00	14.69	9.69
1481WN41705[1]	Steel	17.00	5.50	18.69	7.19
1481WN41711[1]	Steel	17.00	11.00	18.69	12.69
1481WN42315[1]	Steel	23.00	15.00	24.69	16.69
1481WN42919[1]	Steel	29.00	19.00	30.69	20.69
1481WN43523[1]	Steel	35.00	23.00	36.69	24.69
1481WN4SS0503[2]	Stainless Steel	5.00	3.00	6.69	4.69
1481WN4SS0905[2]	Stainless Steel	9.00	5.50	10.69	7.19
1481WN4SS1308[2]	Stainless Steel	13.00	8.00	14.69	9.69
1481WN4SS1711[2]	Stainless Steel	17.00	11.00	18.69	12.69
1481WN4SS2315[2]	Stainless Steel	23.00	15.00	24.69	16.69
1481WN4SS2919[2]	Stainless Steel	29.00	19.00	30.69	20.69

[1] UL/ CSA Type 12 and Type 4
[2] UL/ CSA Type 12, Type 4 and Type 4x

Frameless Window Kits

Features

- Designed for indoor use on Type 12 and 13 enclosures.
- Scratch resistant polycarbonate window is 0.125" thick.
- Double sided tape is on the window for easy installation.
- Mounting hardware and template are included.

Part No.	Window Dimensions A	Window Dimensions B	Maximum Cut-Out Size	
1481WFL52	5.50	3.00	4.50	2.00
1481WFL133	13.88	3.88	12.88	2.88
1481WFL96	9.62	7.19	8.62	6.19

© Hammond Manufacturing

Deep Hinged Window Kits

Features

- Extra deep kits are designed to provide protection and easy access to components and equipment installed inside an enclosure.
- Maintain environmental protection level of Type 4, 4X and 12 as noted
- Frame is 14 guage mild steel or 316L stainless steel.
- Quarter turn latch for easy access.
- 2.5 inches of extra usable depth
- Oil resistant neoprene gasket ensures a watertight seal.
- Can be either left or right hand hinged.
- Window is 0.25" thick, UV Resistant Polycarbonate.
- Conveniently sized to allow mounting on the door of any Hammond Wallmount Series enclosure, or in any other Hammond enclosure with a suitable mounting surface.
- Mounting hardware and template are included.
- Finished in ANSI 61 gray recoatable powder or natural brushed stainless steel.

		Overall Dimensions		Viewing Area		Latch	Maximum Cut-Out Size	
Part No.	Material	A	B	C	D	Qty		
1481WDH1418[1]	Steel	12.19	14.56	8.00	9.17	1.00	9.19	11.56
1481WDH1612[1]	Steel	14.19	8.14	10.00	2.75	1.00	11.19	5.14
1481WDH2016[1]	Steel	18.19	12.14	14.00	6.75	1.00	15.19	9.14
1481WDH2416[1]	Steel	22.19	12.14	18.00	6.75	1.00	19.19	9.14
1481WDH2420[1]	Steel	22.19	16.14	18.00	10.75	1.00	19.19	13.14
1481WDH2430[1]	Steel	22.19	26.14	18.00	20.75	1.00	19.19	23.14
1481WDH3024[1]	Steel	28.19	20.14	24.00	14.75	2.00	25.19	17.14
1481WDH3624[1]	Steel	34.19	20.14	30.00	14.75	2.00	31.19	17.14
1481WSSDH1418[2]	Stainless Steel	12.19	14.56	8.00	9.17	1.00	9.19	11.56
1481WSSDH1612[2]	Stainless Steel	14.19	8.14	10.00	2.75	1.00	11.19	5.14
1481WSSDH2016[2]	Stainless Steel	18.19	12.14	14.00	6.75	1.00	15.19	9.14
1481WSSDH2416[2]	Stainless Steel	22.19	12.14	18.00	6.75	1.00	19.19	9.14
1481WSSDH2420[2]	Stainless Steel	22.19	16.14	18.00	10.75	1.00	19.19	13.14
1481WSSDH2430[2]	Stainless Steel	22.19	26.14	18.00	20.75	1.00	19.19	23.14
1481WSSDH3024[2]	Stainless Steel	28.19	20.14	24.00	14.75	2.00	25.19	17.14
1481WSSDH3624[2]	Stainless Steel	34.19	20.14	30.00	14.75	2.00	31.19	17.14

[1] UL/ CSA Type 12 and Type 4
[2] UL/ CSA Type 12, Type 4 and Type 4x

Distributed by Gross Automation | +1 (262) 252-1600. | hammondsales@grossautomation.com

Technical references and CAD downloads available at www.hammondmfg.com

All dimensions in inches unless specified otherwise

© Hammond Manufacturing

Polycarbonate HMI Hinged Cover Kits

Features

- Provides protection for instruments or electronics requiring routine attention or detail.
- Available in light gray solid opaque or polycarbonate thermoplastic clear covers.
- Cover Latching Options - hinged screw cover, tamper proof screw cover, and snap latch with pad lock feature.
- Listed UL component for use with enclosures rated NEMA Types 1, 3, 3R, 4, 4X, 12 or 13.
- CSA listed NEMA Type 1, 3, 3R, 4, 4X, 12 or 13.
- 316 stainless steel hinge pin.
- UV stabilized for outdoor use.
- Formed-In-Place (FIP) polyurethane gasket in continuous channel.
- Designed for use with wall thicknesses from 16 gauge through 1/4”
- #10-32 threaded brass inserts with plated steel mounting fasteners.
- Service temperature -31°F (-35°C) to 266°F (130°C)

Accessories

- HMI Cover Prop Arm...*See Page* ***297***

				Frame Size Dimensions			Viewing Area	
Clear Cover	**Opaque Cover**	**Optional Prop Arm**	**Closure Style**	**A**	**B**	**C**	**D**	**E**
PJHMI88CCH	**PJHMI88H**	**PJHMIPROP88**	Screw Cover	7.93	8.15	2.27	6.47	6.69
PJHMI88CCHTP	**PJHMI88HTP**	**PJHMIPROP88**	Tamperproof Screw Cover	7.93	8.15	2.27	6.47	6.69
PJHMI88CCL	**PJHMI88L**	**PJHMIPROP88**	Snap Latch Cover	7.93	8.15	2.27	6.47	6.69
PJHMI108CCH	**PJHMI108H**	**PJHMIPROP108**	Screw Cover	9.93	8.15	2.27	8.47	6.69
PJHMI108CCHTP	**PJHMI108HTP**	**PJHMIPROP108**	Tamperproof Screw Cover	9.93	8.15	2.27	8.47	6.69
PJHMI108CCL	**PJHMI108L**	**PJHMIPROP108**	Snap Latch Cover	9.93	8.15	2.27	8.47	6.69
PJHMI1210CCH	**PJHMI1210H**	**PJHMIPROP1210**	Screw Cover	11.93	10.15	2.27	10.47	8.69
PJHMI1210CCHTP	**PJHMI1210HTP**	**PJHMIPROP1210**	Tamperproof Screw Cover	11.93	10.15	2.27	10.47	8.69
PJHMI1210CCL	**PJHMI1210L**	**PJHMIPROP1210**	Snap Latch Cover	11.93	10.15	2.27	10.47	8.69
PJHMI1412CCH	**PJHMI1412H**	**PJHMIPROP1412**	Screw Cover	13.95	12.07	2.20	12.49	10.71
PJHMI1412CCHTP	**PJHMI1412HTP**	**PJHMIPROP1412**	Tamperproof Screw Cover	13.95	12.07	2.20	12.49	10.71
PJHMI1412CCL	**PJHMI1412L**	**PJHMIPROP1412**	Snap Latch Cover	13.95	12.07	2.20	12.49	10.71
PJHMI1614CCH	**PJHMI1614H**	**PJHMIPROP1614**	Screw Cover	16.01	14.23	2.27	14.49	12.71
PJHMI1614CCHTP	**PJHMI1614HTP**	**PJHMIPROP1614**	Tamperproof Screw Cover	16.01	14.23	2.27	14.49	12.71
PJHMI1614CCL	**PJHMI1614L**	**PJHMIPROP1614**	Snap Latch Cover	16.01	14.23	2.27	14.49	12.71

Distributed by Gross Automation | +1 (262) 252-1600. | hammondsales@grossautomation.com

Technical references and CAD downloads available at www.hammondmfg.com

All dimensions in inches unless specified otherwise

Quality Products. Service Excellence.
© Hammond Manufacturing
Canada: 519.822.2960 or 905.456.3770 USA: 716.630.7030
Data Subject to change without notice

HMI Cover Prop Arm

PJHMI Series

Features

- Stainless steel construction.
- When HMI Cover mounted with hinge along top edge, prop arm unfolds to provide hands free support.
- Mounts on right or left side of HMI Cover.
- Easily field installable.
- Choose appropriate Prop Arm for the size of HMI Cover used (PJHMI Series.)

Part No.	Fits Window Kit
PJHMIPROP88	PJHMI88...
PJHMIPROP108	PJHMI108...
PJHMIPROP1210	PJHMI1210...
PJHMIPROP1412	PJHMI1412...
PJHMIPROP1614	PJHMI1614

Polycarbonate Inspection Window Kit

Features

- Clear polycarbonate thermoplastic.
- Provides visibility and easy viewing access to equipment and components installed in an enclosure.
- Recognized UL component for use with enclosures rated NEMA Types 1, 3, 3R, 4, 4X, 12 or 13.
- CSA listed NEMA Type 1, 3, 3R, 4, 4X, 12 or 13
- UV stabilized for outdoor use.
- Formed-In-Place (FIP) polyurethane gasket in continuous channel.
- Designed for use with wall thicknesses from 16 gauge through 1/4”
- #10-32 threaded brass inserts with plated steel mounting fasteners
- Service temperature -31°F (-35°C) to 266°F (130°C)

	Overall Dimensions			Viewing Area	
Part No.	A	B	C	D	E
PJHMI66CX	6.50	6.50	0.60	5.64	5.64
PJHMI95CX	10.00	7.25	0.60	9.14	6.39
PJHMI138CX	14.70	9.70	0.60	13.84	8.84

Distributed by Gross Automation | +1 (262) 252-1600. | hammondsales@grossautomation.com

Technical references and CAD downloads available at www.hammondmfg.com

All dimensions in inches unless specified otherwise

© Hammond Manufacturing

Fluorescent Light Kit & Accessories

Features

- Light kits are offered in 18”, 24” and 48” widths.
- CSA and UL component recognized.
- Operating voltage 115 AC 60Hz
- 115V AC, features a manually operated switch, 115V convenience outlet, durable plastic lens, and 6 foot power cord (without plug).
- Can mount into light mounting channel, bolt through enclosure or by using magnet strip (available separately - see chart below.)
- 1¾” high x 4½” deep.
- Finished in white.
- Use standard 18”, 24” or 48” T8 fluorescent bulb (not included)
- Magnet mount
  - Can be used with mild steel enclosures only.

Accessories

- Remote Door Switches...*See Page* ***299***

Part No.	Description	Magnetic Mount Kit Part No.	Replacement Lens Kit Part No.
FLK18T8[1]	18” Fluorescent Light Kit 115V	**FLK18MM**	**FLK18LENSE**
FLK24T8[1]	24” Fluorescent Light Kit 115V	**FLK18MM**	**FLK24LENSE**
FLK48T8[1]	48” Fluorescent Light Kit 115V	**FLK48MM**	**FLK48LENSE**

[1] T8 fluorescent bulb not included

LED Light Kit

Features

- Available in 9”,17.5”,26”,34.5” and 38.5” lengths
- Operating voltage 120V AC5 (50/60Hz). Operating temperature -20C to +50C
- Provides 175 lumens per LED module
- Long lamp life 60,000 hours in warm white color temperature
- No remote power supplies as unit comes with its own integral LED drivers
- Hard wired via multiple knockouts in light weight extruded Aluminum frame finished white with manual operated switch
- Hinged glass diffuser allows easy access to replaceable LED module

Accessories

- Remote Door Switches...*See Page* ***299***

Part Number	Description	Number LED Modules	Lumens	Energy Use
FLK5LED	9” LED Light Kit	1	175	4.4 w
FLK7LED	17.5” LED Light Kit	2	350	7.2 w
FLK10LED	26” LED Light Kit	3	525	9.8 w
FLK15LED	34.5” LED Light Kit	4	700	15.0 w
FLK17LED	38.5 LED Light Kit	5	875	17.0 w

Distributed by Gross Automation | +1 (262) 252-1600. | hammondsales@grossautomation.com

Technical references and CAD downloads available at www.hammondmfg.com

All dimensions in inches unless specified otherwise

Quality Products. Service Excellence.
© Hammond Manufacturing
Canada: 519.822.2960 or 905.456.3770 USA: 716.630.7030
Data Subject to change without notice

Remote Door Switches

Features

- Permits convenient door activated on-off function of air conditioners.
- Can be wired normally open or normally closed.
- 115/230 V AC

Part No.	For use with
FLKDS	1418, 1422, 1447, 2UD, UHD
FDS1	Eclipse, HME

DIN Mount Receptacle

Features

- 125V/15A max. receptacle
- Mounts to 35mm DIN rail (not included)
- 3.6”H x 2.4”W x 1.9”D
- CE, UL/cUL component recognized

Part No.	SSD03504001

Door Support Guide

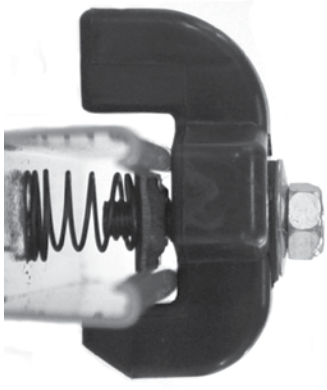

Features

- Designed for use when heavy loads or uneven mounting surfaces changes door alignment.
- Field installable kit.
- Can be used on Hammond Eclipse and 1418 Series wall mount enclosures, all freestanding and floor mount enclosures - both painted and stainless steel
- Kit includes all necessary hardware and installation instructions Sealing washers included maintain enclosure integrity

Part No.	DSG1

Distributed by Gross Automation | +1 (262) 252-1600. | hammondsales@grossautomation.com

Technical references and CAD downloads available at www.hammondmfg.com

All dimensions in inches unless specified otherwise

© Hammond Manufacturing

Gland Plates

Features

- 14 gauge mild steel gland plate allows for easy cable entry into enclosure
- Maintains NEMA 12, 4 rating
- Hardware and cutout template included

Finish

- Available in ANSI 61 Gray and RAL 7035 Light Gray

Part No.	Finish	Overall Dimensions H	Overall Dimensions W	Fits Opening H	Fits Opening W
GP063LG	RAL 7035 Light Gray	6.31	2.75	5.06	1.50
GP134LG	RAL 7035 Light Gray	13.00	3.56	11.75	2.31
GP136LG	RAL 7035 Light Gray	13.38	5.88	12.13	4.63
GP216LG	RAL 7035 Light Gray	20.88	5.88	19.63	4.63
GP063GY	ANSI 61 Gray	6.31	2.75	5.06	1.50
GP134GY	ANSI 61 Gray	13.00	3.56	11.75	2.31
GP136GY	ANSI 61 Gray	13.38	5.88	12.13	4.63
GP216GY	ANSI 61 Gray	20.88	5.88	19.63	4.63

Gland Plates

Features

- 14 gauge steel gland plate allows for easy cable entry into enclosure
- Maintains NEMA 12, 4 rating, Stainless plates hold type 4X rating
- Hardware and cutout template included
- Modified sizes are available:
  - 16 gauge mild or stainless 76” x 18”
  - 14 gauge mild or stainless 76” x 25”
  - 12 and 10 gauge mild or stainless 76” x 40”
  - 0.081 aluminum 76” x 18”
  - 0.100 aluminum 76” x 25”

Finish

- Available in ANSI 61 Gray and RAL 7035 Light Gray
- Stainless Plates are 316 with a number 4 brush finish

Part No.	Finish	Overall Dimensions H	Overall Dimensions W	Fits Opening H	Fits Opening W
GP1507LG	RAL 7035 Light Gray	15.00	7.50	12.00	4.50
GP2207LG	RAL 7035 Light Gray	22.00	7.50	19.00	4.50
GP1507GY	ANSI 61 Gray	15.00	7.50	12.00	4.50
GP2207GY	ANSI 61 Gray	22.00	7.50	19.00	4.50
GP1507S16	316 STAINLESS	15.00	7.50	12.00	4.50
GP2207S16	316 STAINLESS	22.00	7.50	19.00	4.50

Distributed by Gross Automation | +1 (262) 252-1600. | hammondsales@grossautomation.com

Technical references and CAD downloads available at www.hammondmfg.com

All dimensions in inches unless specified otherwise

© Hammond Manufacturing

Quality Products. Service Excellence.

Canada: 519.822.2960 or 905.456.3770 USA: 716.630.7030

Data Subject to change without notice

Stack Lights

- Modular design for all indoor and outdoor applications.
- Provides warning signals and diplays machine status.
- High level of protection against electric shock with IP 54 rating.
- Separate components for easy ordering to suit every installation application.

Base and Tubes

Part No.	Description	L1	L2
PBR50BC	Base & End Module	-	-
PBR50S100	Tubular Stand/Plinth	3.46	-
PBR50S250	Tubular Stand/Plinth	9.37	-
PBR50T100	Threaded tubular stand/bracket	-	3.07
PBR50T250	Threaded tubular stand/bracket	-	8.98
PBR50T400	Threaded tubular stand/bracket	-	14.13

Modules

Part No.	Description
PBR50CLCL	Continuous beam module, transparent
PBR50CLYE	Continuous beam module, yellow
PBR50CLAM	Continuous beam module, amber
PBR50CLRE	Continuous beam module, red
PBR50CLGR	Continuousbeam module, green
PBR50CLBL	Continuous beam module, blue
PBR50BLYE24V	Blinking module, yellow
PBR50BLRE24V	Blinking module, red
PBR50BLGR24V	Blinking module, green

Gaskets, Bulbs and Accessories

Part No.	Description
PBR50MG	Replacement gasket for light module & base module
PBR50TG	Replacement gasket for mounting tube with plinth
PBR50BG	Replacement gasket for direct mounting IP 65
PBR50LED24	LED light bulb 24V/BA 15d
PBR50LED115	LED light bulb 115V/BA 15d
PBR50L24	Light bulb 24V DC/BA 15d 7W
PBR50L115	Light bulb 115V CD/BA 15d 7W
PBR50LS	Bulb Remover/Installer

Modular Data	Continuous Beam	Blinking Light
Modular Colors	Yellow, Red, Green, Amber, Blue, Transparent	Yellow, Red, Green
Modular Stages	Max. 5	Max. 5)
Angle of Beam	360 degrees	360 degrees
Percentage Duty Cycle	1	1
Rated Power, max.	7W	7W
Rated Power with 5 stages	5W	5W
Lamp Socket	BA 15d	BA 15d
Service life of light bulb/tube	approx. 1500h	approx. 1500h
AC Voltage Rating	230 V, 50/60 Hz, -15% to + 10%	230 V, 50/60 Hz, -15% to +10%
Current Capacity Rating	0.035 A	0.08 A
DC Voltage Rating	24 V, -15% to +20%	24 V, -15% to +20%
Current Capacity Rating	0.3 A	0.25 A

Distributed by Gross Automation | +1 (262) 252-1600. | hammondsales@grossautomation.com

Technical references and CAD downloads available at www.hammondmfg.com

All dimensions in inches unless specified otherwise

© Hammond Manufacturing

Flange Disconnect Operator Adaptor Kits

Features

- Used to adapt flange mounted operating mechanisms to all Hammond enclosures with universal cutouts.
- Kits include an adaptor plate and all of the required parts (with instructions) to interlock the master door with the operator mechanism.
- Blank plates are used to cover the flange cutouts in Hammond universal type disconnect enclosures.

Part No.	Operator Make & Type	Manufacturer Part No.
AK1494FD	Allen Bradley	1494F and D
BPAK	Blank plate	

Part No.	Operator Make & Type	Manufacturer Part No.	
AKU	ABB Controls - operating handle		
	Disconnect Switch	DSFHN-HS12	
	Circuit Breaker	K7FHD-HS12	
	Allen Bradley - 1494V variable depth operating handle		
	Disconnect Switch		
	30 to 200	1494V H1	for 2UD, UHD, UHDM
	400 to 600	1494V H2	for UHD
	400	1494V H2	for UHDM
	Circuit Breaker	1494V H11	
	Cutler Hammer - operating handle		
	Disconnect Switch	C361H1 or H3	
	Circuit Breaker		
	150 A	C371H1 or H3	
	250 to 600 A	C371H5 or H7	for 2UD
	250 to 1200 A	C371H5 or H7	for UHD, UHDM
	Circuit Breaker	C371 Flex-Shaft™ handle mechanism	
	General Electric - operating handle		
	Disconnect Switch	STDA1or STDA2	
	Circuit Breaker	STDA1or STDA2	
	Circuit Breaker Spectra-Flex™ cable operators		
	150 to 600 A	STDA1	
	SK1200 A	STDA3	
	Siemens I.T.E. Max-Flex™ - operating handle		
	Disconnect Switch variable depth	FHOHS	
	Circuit Breaker		
	125 to 600 A	FHOH	
	800 to 2000 A	FHOHN	
	Square D - class 9422 operating mechanism		
	Disconnect Switch variable depth	9422 type A1	
	Circuit Breaker variable depth	9422 type A1	
	Disconnect Switch with cable mechanism	9422 type A1	
	Circuit Breaker with cable mechanism	9422 type A1	

Distributed by Gross Automation | +1 (262) 252-1600. | hammondsales@grossautomation.com

Technical references and CAD downloads available at www.hammondmfg.com

All dimensions in inches unless specified otherwise

Quality Products. Service Excellence.
© Hammond Manufacturing
Canada: 519.822.2960 or 905.456.3770 USA: 716.630.7030
Data Subject to change without notice

Drip Shield Kit

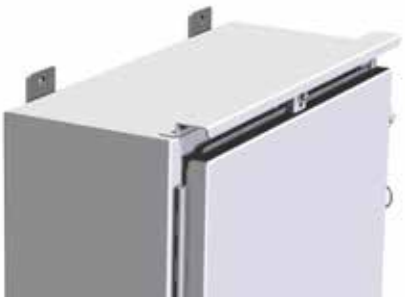

Features

- Easily installed on Type 12, 4 and 4X wall-mount enclosures using stainless steel bolts and sealing washers (included).
- Designed not to interfere with door clamps.
- Protects door from dripping water and settling dust.
- Constructed in 14 gauge mild steel (painted) or 316 stainless steel.
- Maintains enclosure rating.

Part Numbers Painted Steel (Gray)	Painted Steel (Lt. Gray)	Stainless Steel	Fits Enclosure Width (inches)
DK12GY	**DK12LG**	**DK12S16**	12.00
DK16GY	**DK16LG**	**DK16S16**	16.00
DK20GY	**DK20LG**	**DK20S16**	20.00
DK24GY	**DK24LG**	**DK24S16**	24.00
DK30GY	**DK30LG**	**DK30S16**	30.00
DK36GY	**DK36LG**	**DK36S16**	36.00
DK42GY	**DK42LG**	-	42.00
DK48GY	**DK48LG**	-	48.00
DK60GY	**DK60LG**	-	60.00
DK72GY	-	-	72.00

Pedestal and Base

Features

- Used for floor mounting for many types of enclosures, consolets or pushbutton boxes
- Provides wiring feature through the column.
- Meets NEMA Type 12 and 13 requirements.
- Finished in ANSI 61 gray.

Pedestal Column

- Columns are formed from 14 gauge steel with 10 gauge flanges.
- Column access opening with gasketed cover.
- Columns include flange gaskets and a box connector.

Pedestal Base

- Bases are formed from 10 gauge steel with additional reinforcing.
- Bases include levelling screws.

Part No.	Description	H	W	D
1495C35	Pedestal Column	36.00	4.00	4.00
1495D35	Pedestal Column	36.00	6.00	6.00
1495XK	Pedestal Base	1.13	18.00	18.00
1495XN	Pedestal Base	1.13	24.00	24.00

Distributed by Gross Automation | +1 (262) 252-1600. | hammondsales@grossautomation.com

Technical references and CAD downloads available at www.hammondmfg.com

All dimensions in inches unless specified otherwise

© Hammond Manufacturing

Floor Stand Kit

Features

- Kit includes two mounting feet and hardware kit.
- Pre-punched mounting feet may be used as a template to drill holes on bottom of enclosure.
- Finished in gray or natural brushed stainless steel.

Steel Part No.	Stainless Steel Part No.	Foot Height	Enclosure Depth	Dimensions A	B	C
1481FA8K		6.00	8.00	8.00	6.00	4.00
1481FA10K		6.00	10.00	10.00	8.00	6.00
1481FA12K		6.00	12.00	12.00	8.00	6.00
1481FA16K		6.00	16.00	16.00	10.00	8.00
1481FA18K		6.00	18.00	18.00	8.00	6.00
1481FA20K		6.00	20.00	20.00	10.00	8.00
1481FC6K		12.00	6.00	6.00	5.00	4.00
1481FC8K	1481FC8KSS	12.00	8.00	8.00	6.00	4.00
1481FC10K	1481FC10KSS	12.00	10.00	10.00	8.00	6.00
1481FC12K	1481FC12KSS	12.00	12.00	12.00	8.00	6.00
1481FC16K	1481FC16KSS	12.00	16.00	16.00	10.00	8.00
1481FC18K		12.00	18.00	18.00	8.00	6.00
1481FC20K		12.00	20.00	20.00	10.00	8.00
1481FC24K		12.00	24.00	24.00	10.00	8.00
1481FE6K		15.00	6.00	6.00	5.00	4.00
1481FE8K		15.00	8.00	8.00	6.00	4.00
1481FE10K		15.00	10.00	10.00	8.00	6.00
1481FE12K		15.00	12.00	12.00	8.00	6.00
1481FE16K		15.00	16.00	16.00	10.00	8.00
1481FE18K		15.00	18.00	18.00	10.00	8.00
1481FE24K		15.00	24.00	24.00	10.00	8.00
1481FG6K		18.00	6.00	6.00	5.00	4.00
1481FG8K		18.00	8.00	8.00	8.00	6.00
1481FG10K		18.00	10.00	10.00	8.00	6.00
1481FG12K		18.00	12.00	12.00	8.00	6.00
1481FG16K		18.00	16.00	16.00	10.00	8.00
1481FK6K		24.00	6.00	6.00	5.00	4.00
1481FK8K		24.00	8.00	8.00	8.00	4.00
1481FK10K	1481FK10KSS	24.00	10.00	10.00	8.00	4.00
1481FK12K	1481FK12KSS	24.00	12.00	12.00	10.00	6.00
1481FK16K		24.00	16.00	16.00	12.00	8.00

Door Stop Kit

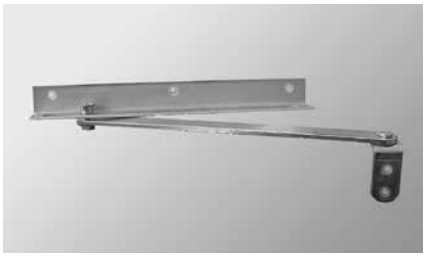

Features

- Provides for door opening in fixed position as required.
- Prevents door swing that can occur in field maintenance situations.
- Minimum enclosure width of 20” for single door and 48” for two-door is required
- This door stop kit maintains NEMA 4x, 4, 3R and 12 ratings when installed correctly using the hardware and directions provided.

Part No.	DSTOPK

Distributed by Gross Automation | +1 (262) 252-1600. | hammondsales@grossautomation.com

Technical references and CAD downloads available at www.hammondmfg.com

All dimensions in inches unless specified otherwise

Quality Products. Service Excellence.
© Hammond Manufacturing
Canada: 519.822.2960 or 905.456.3770 USA: 716.630.7030
Data Subject to change without notice

Touch-Up Spray Paint

Features

- For use in matching standard Hammond colors.
- Provided in 12 oz. spray cans.

Part No.	Color
1413BKLGS	Black - Low Gloss
1413BKS	Black
1413CGRALS	Beige RAL 7032
1413LRS	ANSI 61 Gray
1413NS	White
1413LGS	Light Gray RAL 7035
1413WH9003	White RAL 9003

Literature Pocket

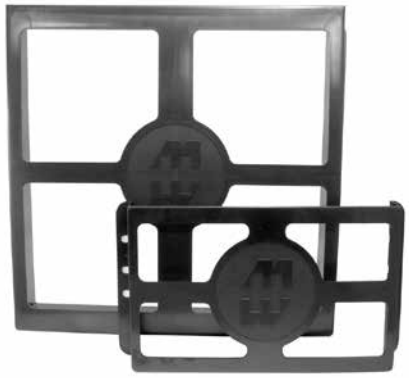

Features

- For use as additional or replacement literature pockets.
- Kit includes pocket, high strength two-sided adhesive tape and surface preparation swab.
- Plastic pocket is black.
- Packaged individually.

Part No.	H	W	D
PKT66	6.00	6.00	0.75
PKT99	6.00	9.00	0.75
PKT1212S	12.00	12.00	1.25
PKT1212	12.00	12.00	2.50

Enclosure Stabilizers

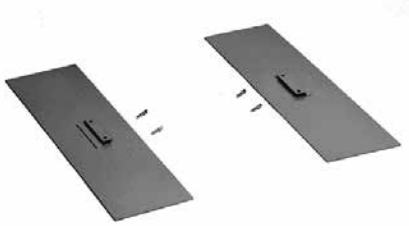

Features

- Prevents floor mounted enclosures from falling over while being worked on before they are bolted to the floor.
- Install by slipping under enclosure mounting foot and tightening two thumb screws.
- 8” x 30” overall dimensions
- Sold in pairs
- Finished in gray.

Part No.	1481ES

© Hammond Manufacturing

Caster Set

Features

- Ball bearing, swivel and hard composition wheels.

Part No.	Strength	Wheel Diameter	Overall Height Added to Cabinet	Hole Mounting Pattern Width	Hole Mounting Pattern Depth	Caster Set Weight Capacity	Qty Included In Set	Qty with Brakes Included
1425B	Lite Duty	3.00	3.81	1.75	3.00	360	4	0
1425BM	Medium Duty	3.00	3.81	1.75	3.00	700	4	0
1425BH	Heavy Duty	3.00	3.81	1.75	3.00	1050	4	0
1425BHLOCK	Heavy Duty	3.00	3.81	1.75	3.00	1050	4	4

Distributed by Gross Automation | +1 (262) 252-1600. | hammondsales@grossautomation.com

Technical references and CAD downloads available at www.hammondmfg.com

All dimensions in inches unless specified otherwise

Quality Products. Service Excellence.
© Hammond Manufacturing
Canada: 519.822.2960 or 905.456.3770 USA: 716.630.7030
Data Subject to change without notice

Casters

Features

- Packaged in sets of four.
- 800 lb. load capacity per set.
- 4” swivel casters with brakes.
- Features zinc plated ball bearing pivot, composite wheels.

Part No.	1425D

Panel Lifting Handles

Features

- Used for lifting, transporting and installing panel assemblies in enclosures that are positioned horizontally.

Part No.	1481H

Wash Down Floor Stand Kit

Waterfall Series Accessory

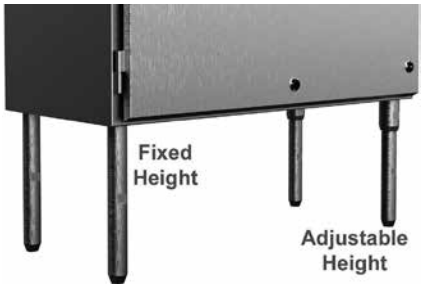

Features

- Attach to bottom enclosure for floor mounting applications
- Permits easy access for cleaning beneath enclosure
- Adds 12” height to enclosure
- Adjustable model has 1” of adjustment – ideal as a leveling foot
- 316L stainless steel construction
- Sold in pairs

Part No.	Description
AKIT316ST	Adjustable Height Floor Stand (pair)
FKIT316ST12	12” Fixed Floor Stand (pair)

© Hammond Manufacturing

Liquid-Tight, Strain Relief Cordgrips

Features

- Black nylon, liquid-tight cordgrip.
- Used where cable is entering or leaving an enclosure.
- Accepts a wide range of cable diameters due to large opening and highly flexible strain relief elements, together with a TPE sealing ring.
- The strain relief elements tighten in a circular sequence on the sealing ring to give outstanding strain relief without twisting or damaging the cable.
- Use the cordgrip with the smallest maximum diameter that will fit your application (see table below).
- Nylon locknut included (as shown).
- Designed to meet NEMA Type 4, 4X, 6, 6P, 12 & 13 - Protection to IP68.
- UL94-V2 flammability rating.
- UL, CSA & VDE listed.

	Use With Wire Diameter		Mounting Hole
Part No.	Min	Max	Diameter
1427CG7	0.10	0.26	0.49
1427CG9	0.14	0.32	0.60
1427CG13	0.24	0.47	0.80
1427CG16	0.35	0.55	0.89
1427CG21	0.51	0.71	1.11

Gasket Kits

NEMA 12 Enclosures

- Self-adhesive cellular neoprene gasket for NEMA 12 enclosures.
- Supplied in 10 foot rolls, 0.19” x 0.75”.

NEMA 4, 4X Enclosures

- Self-adhesive neoprene blend gasket for NEMA 4, 4X enclosures.
- Supplied in 10 foot rolls, 0.25” x 0.75”.

NEMA 4, 4X Enclosures - Extreme Temperature

- Self-adhesive, light gray, silicone foam gasket for NEMA 4, 4X enclosures.
- Temperature range -67° to +392°F (-55° to +200°C)
- Designed for use on the following Hammond Series: EJ, HJ, 1414, Eclipse, 1418 and HW
- Original gasket must be properly removed and replaced with the silicone strip gasket according to instructions provided.
- Supplied in 10 foot rolls, 0.25” x 0.75”.

Part No.	Material	For NEMA Type
1481DJ10	Neoprene	12
1481DJN410	Neoprene/EPDM/SBR	4, 4X
1481DJSIL10	Silicone	4, 4X

Distributed by Gross Automation | +1 (262) 252-1600. | hammondsales@grossautomation.com

Technical references and CAD downloads available at www.hammondmfg.com

All dimensions in inches unless specified otherwise

Quality Products. Service Excellence.
© Hammond Manufacturing
Canada: 519.822.2960 or 905.456.3770 USA: 716.630.7030
Data Subject to change without notice

Fold Down Shelf

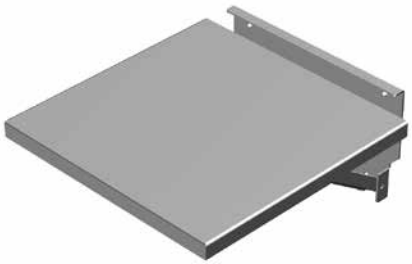

Features

- Supports various equipment used temporarily to service/program switchgear inside enclosures.
- Mounts with bolts through doors or sides.
- Supports up to 100 lbs weight capacity.

		Work Surface	
Part No.	Finish	W	D
FDS1212GY	ANSI 61 Gray	12.00	12.00
FDS1818GY	ANSI 61 Gray	18.00	18.00
FDS2424GY	ANSI 61 Gray	24.00	24.00
FDS1212LG	RAL 7035 Light Gray	12.00	12.00
FDS1818LG	RAL 7035 Light Gray	18.00	18.00
FDS2424LG	RAL 7035 Light Gray	24.00	24.00
FDS1212S16	316 Stainless Steel	12.00	12.00
FDS1818S16	316 Stainless Steel	18.00	18.00
FDS2424S16	316 Stainless Steel	24.00	24.00

Pole Mounting Kit

PJ/PJU - Non Metallic Series

Features

- Eight sizes cover PJU & PJ up to 30x24
- Adjustable steel band allows mounting on pole diameters up to 15”
- Adaptable pole mounting on round, square and rectangular shapes
- Minimal assembly with fewer parts for installation
- Corrosion protection for long outdoor life

Pole Mount Kit Part Number	Use with PJ Series (including all variations)	Use with PJU Series (including all variations)
PJPOLEMNT6	PJ664, PJ864	PJU664,PJU864
PJPOLEMNT8	PJ864,PJ1084,PJ1086	PJU1084
PJPOLEMNT10	PJ1084,PJ1086, PJ12106	PJU12106
PJPOLEMNT12	PJ12106, PJ14126	PJ14126
PJPOLEMNT14	PJ14126, PJ16148	PJU16148
PJPOLEMNT16	PJ16148, PJ18168, PJ20168	PJU181610, PJU201610
PJPOLEMNT20	PJ242010	-
PJPOLEMNT24	PJ242010, PJ242410, PJ302410	-
PJPOLEMNT30	PJEC363012, PJW363014, PJW483610, PJW483614, PJW603610, PJW603614	-

© Hammond Manufacturing

Pole Mounting Kit

Junction and Wallmount Style - Steel

Features

- Designed to mount outdoor rated enclosures - Hammond 1414N4, Eclipse, Eclipse Junior and 1418N4 Series
- Individual components allow user to choose mounting configuration and/or components to purchase
  - Note: Eclipse Series enclosures require use of external Eclipse Mounting Foot Kit (sold separately)
- This pole mount kit is a 2 or 3 part system.

Choose Vertical Channel:

- Vertical channel can be lagged directly to pole or attached using optional stainless steel straps
- Vertical channel prevents enclosure from twisting. Can be used on pole diameters from 4" and up

Choose Horizontal Channel:

- Horizontal steel channels (sold in pairs) come with all hardware needed to secure the enclosure

Choose Straps (Optional):

- Stainless steel straps sold separately in quantities of 4
  - PMSTRAP40 straps are rated for 450 lbs each and can be used for pole diameters up to 10"
  - PMSTRAP55 straps are rated for 250 lbs each and can be used for pole diameters up to 15"

Vertical Channel

		Use with Hammond Series			
Part No.	Description	1414N4	Eclipse Junior (EJ)	1418N4	Eclipse (EN4SD)
PMV1216GY	Qty 1 - Vertical Steel Channel	12"-16" encl height	12"-16" encl height	12"-16" encl height	12"-16" encl height
PMV2024GY	Qty 1 - Vertical Steel Channel	-	-	20"-24" encl height	20"-24" encl height
PMV3036GY	Qty 1 - Vertical Steel Channel	-	-	30"-36" encl height	30"-36" encl height
PMV4248GY	Qty 1 - Vertical Steel Channel	-	-	42"-48" encl height	42"-48" encl height

Horizontal Channel

		Use with Hammond Series			
Part No.	Description	1414N4	Eclipse Junior (EJ)	1418N4	Eclipse (EN4SD)
PMH15GY	Qty 2 - Horizontal Steel Channel	12"-16" encl width	12"-16" encl width	12"-20" encl width	12"-16" encl width
PMH25GY	Qty 2 - Horizontal Steel Channel	-	-	24"-30" encl width	20"-24" encl width
PMH35GY	Qty 2 - Horizontal Steel Channel	-	-	36" encl width	30"-36" encl width

Stainless Steel Straps

Part No.	Description
PMSTRAP40	Qty 4 - 0.50" x 39" length 316 stainless strap, supports up to 450 lbs, pole diameters up to 10"
PMSTRAP55	Qty 4 - 0.31" x 55" length 316 stainless strap, supports up to 250 lbs, pole diameters up to 15"

Distributed by Gross Automation | +1 (262) 252-1600. | hammondsales@grossautomation.com

Technical references and CAD downloads available at www.hammondmfg.com

All dimensions in inches unless specified otherwise

Quality Products. Service Excellence.
© Hammond Manufacturing
Canada: 519.822.2960 or 905.456.3770 USA: 716.630.7030
Data Subject to change without notice

Flush Covers

CS/CSKO Accessory

Features

- Oversized covers for CS/CSKO Series screw cover junction boxes
- Designed for flush mount installation requirements
- 1.5" taller and wider than standard covers
- Constructed of 16 or 14 gauge steel
- Painted ANSI 61 gray
- Note - Boxes sold separately

	Actual Size		Fits Box Size		Cover
Part No.	L	W	H	W	Gauge
CSFC66	7.50	7.50	6.00	6.00	16
CSFC86	9.50	7.50	8.00	6.00	16
CSFC88	9.50	9.50	8.00	8.00	16
CSFC108	11.50	9.50	10.00	8.00	16
CSFC1010	11.50	11.50	10.00	10.00	16
CSFC128	13.50	9.50	12.00	8.00	16
CSFC1212	13.50	13.50	12.00	12.00	16
CSFC1616	17.50	17.50	16.00	16.00	16
CSFC1812	19.50	13.50	18.00	12.00	16
CSFC1818	19.50	19.50	18.00	18.00	16
CSFC2418	25.50	19.50	24.00	18.00	14
CSFC2424	25.50	25.50	24.00	24.00	14

Top Hat Cable Modules

Features

- Provides for cable management and slack storage space
- Pre-drilled for simple assembly onto top of freestanding enclosures
- Easily removable front panels
- Sturdy 12 gauge construction
- Provides Type 4, 12 and 3R protection
- Painted ANSI 61 gray

					Cover Plate Openings		Cutout Opening	
Part #	A	B	C	Gauge	D	E	F	G
HTH124818	12.00	48.06	18.06	12	8.50	20.53	14.06	39.06
HTH124820	12.00	48.06	20.06	12	8.50	20.53	16.06	39.06
HTH124824	12.00	48.06	24.06	12	8.50	20.53	20.06	39.06
HTH126018	12.00	60.06	18.06	12	8.50	26.53	14.06	51.06
HTH126020	12.00	60.06	20.06	12	8.50	26.53	16.06	51.06
HTH126024	12.00	60.06	24.06	12	8.50	26.53	20.06	51.06
HTH126036	12.00	60.06	36.06	12	8.50	26.53	32.06	51.06
HTH127218	12.00	72.06	18.06	12	8.50	32.53	14.06	63.06
HTH127220	12.00	72.06	20.06	12	8.50	32.53	16.06	63.06
HTH127224	12.00	72.06	24.06	12	8.50	32.53	20.06	63.06
HTH127236	12.00	72.06	36.06	12	8.50	32.53	32.06	63.06

© Hammond Manufacturing

Barrier Kits for Type 4 Wallmount

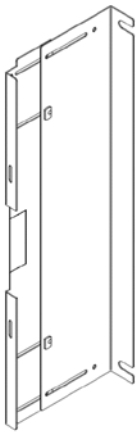

Features

- Barrier kits are designed to provide 2 vertical sections within 2 door, Type 4 enclosures.
- For use with HN4WM Series.
- For application example, can provide separation between power and control sections within one cabinet.
- Does NOT provide complete physical separation as there is space above and below the barrier to run wiring.
- Depth mounted - bolted to the inner panel at rear and the center post at front.
- Panels are steel and painted white.
- Mounting hardware included.

Part No.	Description
BKWM2408	For use with 24H x 8D
BKWM3010	For use with 30H x 10D
BKWM3612	For use with 36H x 12D
BKWM4212	For use with 42H x 12D
BKWM4812	For use with 48H x 12D

Barrier Kits for Type 4 Floormount

Features

- Barrier kits are designed to provide 2 vertical sections within 2 door, Type 4 enclosures.
- For use with HN4FM Series and 1422N4 Series.
- For application example, can provide separation between power and control sections within one cabinet.
- Does NOT provide complete physical separation as there is space above and below the barrier to run wiring.
- Depth mounted - bolted to the inner panel at rear and the center post at front.
- Certain sizes are depth adjustable
- Panels are steel and painted white.
- Mounting hardware included.

Part No.	Description
BKFM6012	For use with 60H x 10/12D
BKFM6018	For use with 60H x 18D
BKFM7218	For use with 72H x 12/18D
BKFM7224	For use with 72H x 24D

Distributed by Gross Automation | +1 (262) 252-1600. | hammondsales@grossautomation.com

© Hammond Manufacturing

Corrosion Inhibitors

Cortec VpCI-101
Impregnated Foam Device

Cortec VpCI-105
Plastic Emitter

Cortec VpCI-170 Impregnated
Foam Tape

Cortec VpCI-111
Plastic Emitter

Emitter Devices

- Emitters are designed to protect electrical and electronic components within non-ventilated enclosures.
- These products emit a vapor into the interior of the enclosure which deposits on the metal surfaces forming a protective molecular layer. This layer provides multi-metal protection and helps reduce corrosion in the enclosure.

HVPCI-101 Pads

- Patented VpCI impregnated foam affixed via self adhesive backing.
- Provides protection for 1 cubic foot of enclosed space
- Sold in carton of 50 pads
- Full technical details available on separate data sheet

HVPCI-105 Cups

- Cup with one way Tyveck release membrane affixed via self adhesive.
- Provides protection for 5 cubic feet of enclosed space.
- Sold in carton of 20 cups
- Full technical details available on separate data sheet

HPVCI-111 Cups

- Cup with one way Tyveck release membrane affixed via self adhesive.
- Provides protection for 11 cubic feet of enclosed space.
- Sold in carton of 10 cups
- Full technical details available on separate data sheet

HVPCI-150 Tape

- VpCI impregnated foam tape affixed via self adhesive backing.
- Each linear inch of tape provides protection for 0.4 cubic foot of enclosed space
- Sold in carton of 6 x 12 foot rolls
- Full technical details available on separate data sheet

HVPCI-170 Tape

- VpCI impregnated foam tape affixed via self adhesive backing.
- Each linear inch of tape provides protection for 1 cubic foot of enclosed space
- Sold in carton of 1 x 20 foot roll
- Full technical details available on separate data sheet

Spray

- Instant corrosion/oxidation protection without CFC's.
- Displaces moisture and is anti-static.
- Up to 2 year indoor protection.
- Sold in carton of 6 cans.
- Full technical details available on separate data sheet

Part No.	Description
HVPCI-101	Pad 3.0"x1.25"x0.25" - Package of 50
HVPCI-105	Cup 2.25" Dia x 0.75" - Package of 20
HVPCI-111	Cup 2.25" Dia x 1.27" - Package of 10
HVPCI-150	Tape 12' roll x 0.75" x 0.25" - Package of 6 rolls
HVPCI-170	Tape 20' roll x 2.0" x 0.25" - Single Roll
HVPCI-238	Spray - Package of 6 cans

Distributed by Gross Automation | +1 (262) 252-1600. | hammondsales@grossautomation.com

Technical references and CAD downloads available at www.hammondmfg.com

All dimensions in inches unless specified otherwise

© Hammond Manufacturing

Part Number Index

Part No.	Page
1413BKLGS	305
1413BKS	305
1413CGRALS	305
1413LGS	305
1413LRS	305
1413NS	305
1413WH9003	305
1414A	5
1414A4	5
1414C	5
1414C4	5
1414E	5
1414G	5
1414I	5
1414K	5
1414M6	5
1414M8	5
1414N4A	6
1414N4ALA	70
1414N4ALC	70
1414N4ALE	70
1414N4ALG	70
1414N4ALI	70
1414N4ALK	70
1414N4ALM6	70
1414N4ALM8	70
1414N4ALO10	70
1414N4ALO6	70
1414N4C	6
1414N4E	6
1414N4G	6
1414N4I	6
1414N4K	6
1414N4M6	6
1414N4M8	6
1414N4O10	6
1414N4O6	6
1414N4PHA	9
1414N4PHC	9
1414N4PHE	9
1414N4PHG	9
1414N4PHI	9
1414N4PHI6	9
1414N4PHK	9
1414N4PHL6	9
1414N4PHM6	9
1414N4PHM8	9
1414N4PHO10	9
1414N4PHO6	9
1414N4PHS16C4	44
1414N4PHS16E	44
1414N4PHS16G	44
1414N4PHS16G4	44
1414N4PHS16I	44
1414N4PHS16K	44
1414N4PHS16K6	44
1414N4PHS16L6	44
1414N4PHS16M6	44
1414N4PHS16M8	44
1414N4PHS16O10	44
1414N4PHS16O6	44
1414N4PHSSC4	44
1414N4PHSSE	44
1414N4PHSSG	44
1414N4PHSSG4	44
1414N4PHSSI	44
1414N4PHSSK	44
1414N4PHSSK6	44
1414N4PHSSL6	44
1414N4PHSSM6	44
1414N4PHSSM8	44
1414N4PHSSO10	44
1414N4PHSSO6	44
1414N4SSA	45
1414N4SSC4	45
1414N4SSE	45
1414N4SSG	45
1414N4SSI	45
1414N4SSK	45
1414N4SSM6	45
1414N4SSO6	45
1414O10	5
1414O6	5
1414PHA	8
1414PHA4	8
1414PHC	8
1414PHC4	8
1414PHE	8
1414PHG	8
1414PHG6	8
1414PHH4	8
1414PHI	8
1414PHI6	8
1414PHJ6	8
1414PHK	8
1414PHK8	8
1414PHKC4	8
1414PHL6	8
1414PHM6	8
1414PHM8	8
1414PHMH6	8
1414PHN6	8
1414PHO10	8
1414PHO6	8
1414PHO8	8
1414PHRG	8
1414PHRI	8
1414PHRK	8
1414PHRM6	8
1414PHRO6	8
1414SCA	11
1414SCC	11
1414SCE	11
1414SCG	11
1414SCI	11
1414SCK	11
1414SCM6	11
1414SCM8	11
1414SCO10	11
1414SCO6	11
1416E	231
1416G	231
1416I	231
1416K	231
1416M	231
1416O	231
1416Q	231
1416T	231
1418A6	25
1418A8	25
1418ACS	292
1418AR10	25
1418AR6	25
1418AR8	25
1418AW18	40
1418B10	25
1418B6	25
1418B8	25
1418BCS	292
1418BW20	40
1418BY20	40
1418BY24	40
1418BY36	40
1418BYD24	40
1418C10	25
1418C12	25
1418C6	25
1418C8	25
1418CA6	25
1418CA8	25
1418CR6	25
1418CR8	25
1418D10	25
1418D6	25
1418D8	25
1418E10	25
1418E12	25
1418E16	25
1418E6	25
1418E8	25
1418ER6	25
1418ER8	25
1418F10	25
1418F6	25
1418F8	25
1418FG6	25
1418G6	25
1418G8	25
1418H6	25
1418H8	25
1418J10	25
1418J12	25
1418J16	25
1418J6	25
1418J8	25
1418JB7	13
1418JC7	13
1418JC9	13
1418JD7	13
1418JD9	13
1418JE7	13
1418JE9	13
1418JF7	13
1418JF9	13
1418JJ11	13
1418JJ7	13
1418JJ9	13
1418JK13	13
1418JK7	13
1418JK9	13
1418JL11	13
1418JL7	13
1418JL9	13
1418JM13	13
1418JM9	13
1418JO9	13
1418JP9	13
1418JS11	13
1418K10	25
1418K12	25
1418K16	25
1418K20	25
1418K24	25
1418K6	25
1418K8	25
1418KA8	25
1418KG8	25
1418KK12	25
1418KK8	25
1418KR8	25
1418L10	25
1418L12	25
1418L6	25
1418L8	25
1418LL12	25
1418LL8	25
1418M10	25
1418M12	25
1418M16	25
1418M20	25
1418M6	25
1418M8	25
1418MR8	25
1418N4ALB6	75
1418N4ALC10	75
1418N4ALC6	75
1418N4ALE10	75
1418N4ALE6	75
1418N4ALJ8	75
1418N4ALK12	75
1418N4ALK8	75
1418N4ALM12	75
1418N4ALM8	75
1418N4ALS8	75
1418N4ALT12	75
1418N4AR6	27
1418N4B6	27
1418N4B8	27
1418N4C10	27
1418N4C6	27
1418N4C8	27
1418N4CR6	27
1418N4D6	27
1418N4D8	27
1418N4E10	27
1418N4E12	27
1418N4E6	27
1418N4E8	27
1418N4ER8	27
1418N4F6	27
1418N4F8	27
1418N4G6	27
1418N4H6	27
1418N4J6	27
1418N4J8	27
1418N4K10	27
1418N4K12	27
1418N4K16	27
1418N4K6	27
1418N4K8	27
1418N4KK8	27
1418N4KR8	27
1418N4L12	27
1418N4L6	27

Distributed by Gross Automation | +1 (262) 252-1600. | hammondsales@grossautomation.com

© Hammond Manufacturing

Part Number Index

Part No.	Page
1418N4L8	27
1418N4M10	27
1418N4M12	27
1418N4M16	27
1418N4M8	27
1418N4O8	27
1418N4P12	27
1418N4P8	27
1418N4R10	27
1418N4S10	27
1418N4S12	27
1418N4S16	27
1418N4S16B6	53
1418N4S16B8	53
1418N4S16C10	53
1418N4S16C6	53
1418N4S16C8	53
1418N4S16CR6	53
1418N4S16D6	53
1418N4S16D8	53
1418N4S16E10	53
1418N4S16E6	53
1418N4S16E8	53
1418N4S16ER8	53
1418N4S16F8	53
1418N4S16G6	53
1418N4S16H8	53
1418N4S16J12	53
1418N4S16J6	53
1418N4S16J8	53
1418N4S16K10	53
1418N4S16K12	53
1418N4S16K16	53
1418N4S16K8	53
1418N4S16KK8	53
1418N4S16KR8	53
1418N4S16L10	53
1418N4S16L8	53
1418N4S16LL12	53
1418N4S16M10	53
1418N4S16M12	53
1418N4S16M16	53
1418N4S16M8	53
1418N4S16O10	53
1418N4S16P8	53
1418N4S16S10	53
1418N4S16S12	53
1418N4S16S16	53
1418N4S16S8	53
1418N4S16T12	53
1418N4S16T16	53
1418N4S16W18	63
1418N4S16W18QT	66
1418N4S16X24	63
1418N4S16X24QT	66
1418N4S16Y24	63
1418N4S16Y24QT	66
1418N4S8	27
1418N4SSB6	53
1418N4SSB8	53
1418N4SSC10	53
1418N4SSC6	53
1418N4SSC8	53
1418N4SSCR6	53
1418N4SSD6	53
1418N4SSD8	53
1418N4SSE10	53
1418N4SSE6	53
1418N4SSE8	53
1418N4SSER8	53
1418N4SSF8	53
1418N4SSG6	53
1418N4SSH8	53
1418N4SSJ12	53
1418N4SSJ6	53
1418N4SSJ8	53
1418N4SSK10	53
1418N4SSK12	53
1418N4SSK16	53
1418N4SSK8	53
1418N4SSKK8	53
1418N4SSKR8	53
1418N4SSL10	53
1418N4SSL8	53
1418N4SSLL12	53
1418N4SSM10	53
1418N4SSM12	53
1418N4SSM16	53
1418N4SSM8	53
1418N4SSO10	53
1418N4SSP8	53
1418N4SSS10	53
1418N4SSS12	53
1418N4SSS16	53
1418N4SSS8	53
1418N4SST12	53
1418N4SST16	53
1418N4SSW18	63
1418N4SSW18QT	66
1418N4SSX24	63
1418N4SSX24QT	66
1418N4SSY24	63
1418N4SSY24QT	66
1418N4T10	27
1418N4T16	27
1418N4T8	27
1418N4W18	37
1418N4W18QT	38
1418N4X24	37
1418N4X24QT	38
1418N4Y24	37
1418N4Y24QT	38
1418N8	25
1418O10	25
1418O12	25
1418O8	25
1418P10	25
1418P12	25
1418P16	25
1418P8	25
1418Q8	25
1418QR	269
1418R10	25
1418R8	25
1418S10	25
1418S12	25
1418S16	25
1418S20	25
1418S8	25
1418SFX	292
1418SFY	292
1418SFYY	292
1418T10	25
1418T12	25
1418T16	25
1418T20	25
1418T8	25
1418TFHP	293
1418THHP	293
1418TW18	36
1418TY24	36
1418U12	25
1418U16	25
1418U20	25
1418U24	25
1418V12	25
1418W18	36
1418W24	36
1418W30	36
1418W36	36
1418WD24	36
1418WD30	36
1418WD36	36
1418WFHP	293
1418WHHP	293
1418X18	36
1418X24	36
1418XD24	36
1418XFHP	293
1418XHHP	293
1418Y18	36
1418Y24	36
1418Y30	36
1418Y36	36
1418YD24	36
1418YD36	36
1418YW20	36
1418YY20	36
1418YY24	36
1418YY36	36
1418YYD24	36
1418YYD36	36
1418YYFHP	293
1418YYHHP	293
1418ZCS	292
1418ZW18	40
1418ZW24	40
1418ZWD24	40
1418ZX18	40
1418ZX24	40
1418ZX36	40
1418ZXD24	40
1418ZXD36	40
1418ZY18	40
1418ZY24	40
1418ZYD24	40
1420B7	226
1420C7	226
1420D7	226
1420E7	226
1420E9	226
1420EM9	226
1420F7	226
1420G12	226
1420G16	226
1420G7	226
1420G9	226
1420H7	226
1420H9	226
1420P12	226
1420P16	226
1420P9	226
1420Q9	226
1420R12	226
1420S12	226
1420T12	226
1421CNB100	140
1421CNB25	140
1421CNBF100	140
1421CND100	140
1421CND25	140
1421D	140
1421HPM625	278
1421N4AA50	271
1421N4AB50	271
1421N4BA50	271
1421N4BB50	271
1421N4CA50	271
1421N4CB50	271
1421SP142025	140
1422A8	31
1422A8F	31
1422B10	31
1422B10F	31
1422B12	31
1422B12F	31
1422B16	31
1422B16F	31
1422B20	31
1422B20F	31
1422B24	31
1422B24F	31
1422B8	31
1422B8F	31
1422D10	31
1422D10F	31
1422D12	31
1422D12F	31
1422D16	31
1422D16F	31
1422D24	31
1422D24F	31
1422E10	31
1422E10F	31
1422E12	31
1422E12F	31
1422E16	31
1422E16F	31
1422E20	31
1422E20F	31
1422E24	31
1422E24F	31
1422F10	31
1422F10F	31
1422F12	31
1422F12F	31
1422F16	31
1422F16F	31
1422F20	31
1422F20F	31
1422F24	31
1422F24F	31
1422MD3	41
1422MD320	41

Distributed by Gross Automation | +1 (262) 252-1600. | hammondsales@grossautomation.com

Part Number Index

Part No.	Page
1422MD4	41
1422MD420	41
1422N4B10F	32
1422N4B10FQT	33
1422N4D12F	32
1422N4D12FQT	33
1422N4E12F	32
1422N4E12FQT	33
1422N4F12F	32
1422N4F12FQT	33
1422N4F24F	32
1422N4F24FQT	33
1422N4S16B12F	60
1422N4S16B12FQT	61
1422N4S16D12F	60
1422N4S16D12FQT	61
1422N4S16E12F	60
1422N4S16E12FQT	61
1422N4S16F12F	60
1422N4S16F12FQT	61
1422N4S16F24F	60
1422N4S16F24FQT	61
1422N4SSB12F	60
1422N4SSB12FQT	61
1422N4SSD12F	60
1422N4SSD12FQT	61
1422N4SSE12F	60
1422N4SSE12FQT	61
1422N4SSF12F	60
1422N4SSF12FQT	61
1422N4SSF24F	60
1422N4SSF24FQT	61
1422P10	28
1422P8	28
1422PW8	28
1422R10	28
1422RW10	28
1422RX10	28
1422UV12	28
1422UW12	28
1422UX12	28
1422VV12	28
1422VW12	28
1422VX12	28
1422WW12	28
1425B	306
1425BH	306
1425BHLOCK	306
1425BM	306
1425D	307
1425HME	139
1427B	269
1427B1BK	269
1427B2	269
1427B2BK	269
1427B2BK-1	269
1427C1	269
1427C1BK	269
1427CG13	308
1427CG16	308
1427CG21	308
1427CG7	308
1427CG9	308
1427D	269
1427E	269
1427E1BK	269
1427E1BK-1	269
1427G	269
1427G2	269
1427G2BK	269
1427G3	269
1427G3BK	269
1427H	269
1427L	269
1427L1BK	269
1427LKN1	270
1427LKN4	271
1427M	269
1427M1BK	269
1427M3	269
1427N	269
1427N1BK	269
1427N2	269
1427N2BK	269
1427N3	269
1427P	269
1427P1BK	269
1427P1BK-1	269
1427Q	269
1427S	269
1427S2	269
1427S2BK	269
1427S3	269
1427S3BK	269
1427T	269
1427T2	269
1427T3	269
1427T3BK	269
1427U3	269
1427U3BK	269
1427W	269
1427W2	269
1427W3	269
1427W3BK	269
1435A	173
1435B	173
1435C	173
1435D	173
1435F	173
1435H	173
1435K	173
1435MA	173
1435MB	173
1435MC	173
1435MD	173
1435MF	173
1435MH	173
1435MK	173
1435MO	173
1435MS	174
1435MS16A	174
1435MS16B	174
1435MS16C	174
1435MS16D	174
1435MS16H	174
1435MS16K	174
1435MS16O	174
1435MSSA	174
1435MSSB	174
1435MSSC	174
1435MSSD	174
1435MSSH	174
1435MSSK	174
1435MSSO	174
1435O	173
1435S	174
1435S16A	174
1435S16B	174
1435S16C	174
1435S16D	174
1435S16H	174
1435S16K	174
1435S16O	174
1435SSA	174
1435SSB	174
1435SSC	174
1435SSD	174
1435SSH	174
1435SSK	174
1435SSO	174
1436A	12
1436B	12
1436C	12
1436D	12
1436F	12
1436H	12
1436K	12
1436O	12
1436S	12
1436V	12
1437A	175
1437B	175
1437C	175
1437D	175
1437F	175
1437H	175
1437K	175
1437MA	175
1437MB	175
1437MC	175
1437MD	175
1437MF	175
1437MH	175
1437MK	175
1437MO	175
1437MS	176
1437MS16A	176
1437MS16B	176
1437MS16C	176
1437MS16D	176
1437MSSA	176
1437MSSB	176
1437MSSC	176
1437MSSD	176
1437MV	175
1437MX	175
1437O	175
1437S	176
1437S16A	176
1437S16B	176
1437S16C	176
1437S16D	176
1437S16S	176
1437SSA	176
1437SSB	176
1437SSC	176
1437SSD	176
1437SSS	176
1437V	175
1437X	175
1438A	12
1438B	12
1438C	12
1438D	12
1438F	12
1438H	12
1438K	12
1438O	12
1438S	12
1438V	12
1447S46L12	107
1447SA10	107
1447SA10HK	105
1447SA8	107
1447SA8HK	105
1447SB10	107
1447SB10HK	105
1447SB8	107
1447SB8HK	105
1447SC10	107
1447SC10HK	105
1447SC8	107
1447SC8HK	105
1447SD10	107
1447SD10HK	105
1447SD8	107
1447SD8HK	105
1447SE10	107
1447SE10HK	105
1447SE12	107
1447SE12HK	105
1447SE8	107
1447SE8HK	105
1447SF10	107
1447SF10HK	105
1447SF8	107
1447SF8HK	105
1447SG10	107
1447SG10HK	105
1447SG12	107
1447SG12HK	105
1447SG16	107
1447SG16HK	105
1447SG8	107
1447SG8HK	105
1447SH10	107
1447SH10HK	105
1447SH12	107
1447SH12HK	105
1447SH16HK	105
1447SH8	107
1447SH8HK	105
1447SJ10	107
1447SJ10HK	105
1447SJ12	107
1447SJ12HK	105
1447SJ16HK	105
1447SJ8	107
1447SJ8HK	105
1447SK10	107
1447SK10HK	105
1447SK12	107
1447SK12HK	105
1447SK16	107

Distributed by Gross Automation | +1 (262) 252-1600. | hammondsales@grossautomation.com

© Hammond Manufacturing

Part Number Index

Part No.	Page
1447SK16HK	105
1447SK8	107
1447SK8HK	105
1447SL10	107
1447SL10HK	105
1447SL12	107
1447SL12HK	105
1447SL16	107
1447SL16HK	105
1447SL8	107
1447SL8HK	105
1447SN4B8	111
1447SN4C8	111
1447SN4E8	111
1447SN4F8	111
1447SN4G8	111
1447SN4H12	111
1447SN4J12	111
1447SN4K12	111
1447SN4L12	111
1447SN4SSB8	113
1447SN4SSC8	113
1447SN4SSE8	113
1447SN4SSF8	113
1447SN4SSG8	113
1447SN4SSH12	113
1447SN4SSJ12	113
1447SN4SSK12	113
1447SN4SSL12	113
1447SQ10HK	105
1471C24	163
1471C36	163
1472-24	164
1472-24T	164
1472-24W	164
1472-36	164
1472-36T	164
1472-36W	164
1472-48	164
1472-48T	164
1472-48W	164
1475Q	265
1481C14	268
1481DJ10	308
1481DJN410	308
1481DJSIL10	308
1481ES	305
1481FA10K	304
1481FA12K	304
1481FA16K	304
1481FA18K	304
1481FA20K	304
1481FA8K	304
1481FC10K	304
1481FC10KSS	304
1481FC12K	304
1481FC12KSS	304
1481FC16K	304
1481FC16KSS	304
1481FC18K	304
1481FC20K	304
1481FC24K	304
1481FC6K	304
1481FC8K	304
1481FC8KSS	304
1481FE10K	304
1481FE12K	304
1481FE16K	304
1481FE18K	304
1481FE24K	304
1481FE6K	304
1481FE8K	304
1481FG10K	304
1481FG12K	304
1481FG16K	304
1481FG6K	304
1481FG8K	304
1481FK10K	304
1481FK10KSS	304
1481FK12K	304
1481FK12KSS	304
1481FK16K	304
1481FK6K	304
1481FK8K	304
1481H	307
1481HC18	268
1481L3R1110GY	261
1481L3R1510GY	261
1481L3R55GY	261
1481L3R55SS	261
1481L3R56GY	261
1481L3R56SS	261
1481L3R610GY	261
1481L3R66GY	261
1481L3R66SS	261
1481L3R68GY	261
1481L3R810GY	261
1481L3R88GY	261
1481L44	260
1481L66	260
1481L88	260
1481WDH1418	295
1481WDH1612	295
1481WDH2016	295
1481WDH2416	295
1481WDH2420	295
1481WDH2430	295
1481WDH3024	295
1481WDH3624	295
1481WFL133	294
1481WFL52	294
1481WFL96	294
1481WN40503	294
1481WN40905	294
1481WN41303	294
1481WN41308	294
1481WN41705	294
1481WN41711	294
1481WN42315	294
1481WN42919	294
1481WN43523	294
1481WN4SS0503	294
1481WN4SS0905	294
1481WN4SS1308	294
1481WN4SS1711	294
1481WN4SS2315	294
1481WN4SS2919	294
1481WSSDH1418	295
1481WSSDH1612	295
1481WSSDH2016	295
1481WSSDH2416	295
1481WSSDH2420	295
1481WSSDH2430	295
1481WSSDH3024	295
1481WSSDH3624	295
1485B12	184
1485B120	184
1485B24	184
1485B36	184
1485B48	184
1485B4N	185
1485B4P	185
1485B4Q	185
1485B6	184
1485B60	184
1485B9N	185
1485B9P	185
1485B9Q	185
1485BFF	189
1485BH	185
1485BJ	188
1485BK	185
1485BL1	190
1485BL2	190
1485BM1	185
1485BM2	185
1485BM3	185
1485BS9	185
1485BSM	185
1485BTN	185
1485BTQ	185
1485BV1	185
1485BV2	185
1485BW1	185
1485BW2	185
1485BX	185
1485BY	185
1485BZ12	185
1485BZC12	185
1485C12	184
1485C120	184
1485C24	184
1485C36	184
1485C48	184
1485C4N	185
1485C4P	185
1485C4Q	185
1485C6	184
1485C60	184
1485C9N	185
1485C9P	185
1485C9Q	185
1485CFF	189
1485CH	185
1485CJ	188
1485CK	185
1485CL1	190
1485CL2	190
1485CM1	185
1485CM2	185
1485CM3	185
1485CRE	185
1485CS9	185
1485CSM	185
1485CTN	185
1485CTQ	185
1485CV1	185
1485CV2	185
1485CW1	185
1485CW2	185
1485CX	185
1485CY	185
1485CZ12	185
1485CZC12	185
1485D12	184
1485D120	184
1485D24	184
1485D36	184
1485D48	184
1485D4N	185
1485D4P	185
1485D4Q	185
1485D6	184
1485D60	184
1485D9N	185
1485D9P	185
1485D9Q	185
1485DFF	189
1485DH	185
1485DJ	188
1485DK	185
1485DL1	190
1485DL2	190
1485DM1	185
1485DM2	185
1485DM3	185
1485DRE	185
1485DS9	185
1485DSM	185
1485DTN	185
1485DTQ	185
1485DV1	185
1485DV2	185
1485DW1	185
1485DW2	185
1485DX	185
1485DY	185
1485DZ12	185
1485DZC12	185
1485E12	184
1485E120	184
1485E24	184
1485E36	184
1485E48	184
1485E4N	185
1485E4P	185
1485E4Q	185
1485E6	184
1485E60	184
1485E9N	185
1485E9P	185
1485E9Q	185
1485EFF	189
1485EH	185
1485EJ	188
1485EK	185
1485EL1	190
1485EL2	190
1485ERE	185
1485ES9	185
1485ESM	185
1485ETN	185
1485ETQ	185
1485EV1	185

Distributed by Gross Automation | +1 (262) 252-1600. | hammondsales@grossautomation.com

Part Number Index

Part No.	Page
1485EV2	185
1485EW1	185
1485EW2	185
1485EX	185
1485EY	185
1485EZ12	185
1485EZC12	185
1485F12	184
1485F120	184
1485F24	184
1485F36	184
1485F48	184
1485F4N	185
1485F6	184
1485F60	184
1485F9N	185
1485F9P	185
1485F9Q	185
1485FH	185
1485FK	185
1485FREC	185
1485FRED	185
1485FS9	185
1485FSM	185
1485FTN	185
1485FW1	185
1485FW2	185
1485FX	185
1485FY	185
1486B12	196
1486B18	196
1486B24	196
1486B30	196
1486B36	196
1486B48	196
1486B60	196
1486B72	196
1486C12	196
1486C18	196
1486C24	196
1486C30	196
1486C36	196
1486C48	196
1486C60	196
1486C72	196
1486D12	196
1486D18	196
1486D24	196
1486D30	196
1486D36	196
1486D48	196
1486D60	196
1486D72	196
1487B12	189
1487B120	189
1487B24	189
1487B2P	189
1487B36	189
1487B48	189
1487B4P	189
1487B60	189
1487B9P	189
1487BH	190
1487BK	190
1487BM1	189
1487BM2	189
1487BM3	189
1487BM6	189
1487BS	190
1487BT	190
1487BV1	189
1487BV2	189
1487BW	189
1487BX	189
1487BY	190
1487C12	193
1487C120	189
1487C120SS	193
1487C12SS	193
1487C24	189
1487C24SS	193
1487C2P	189
1487C36	189
1487C36SS	193
1487C48	189
1487C48SS	193
1487C4P	189
1487C4PSS	193
1487C60	189
1487C60SS	193
1487C9P	189
1487C9PSS	193
1487CB60	189
1487CFFSS	193
1487CH	190
1487CHSS	193
1487CK	190
1487CKSS	193
1487CL1SS	193
1487CL2SS	193
1487CM1	189
1487CM2	189
1487CM3	189
1487CM6	189
1487CM6SS	193
1487CRC	190
1487CRE	190
1487CS	190
1487CSSS	193
1487CT	190
1487CTSS	193
1487CV1	189
1487CV2	189
1487CV2SS	193
1487CW	189
1487CX	189
1487CXSS	193
1487CY	190
1487D12	193
1487D120	189
1487D120SS	193
1487D12SS	193
1487D24	189
1487D24SS	193
1487D2P	189
1487D36	189
1487D36SS	193
1487D48	189
1487D48SS	193
1487D4P	189
1487D4PSS	193
1487D60	189
1487D60SS	193
1487D9P	189
1487D9PSS	193
1487DB60	189
1487DFFSS	193
1487DH	190
1487DHSS	193
1487DK	190
1487DKSS	193
1487DL1SS	193
1487DL2SS	193
1487DM1	189
1487DM2	189
1487DM3	189
1487DM6	189
1487DM6SS	193
1487DRC	190
1487DRCSS	193
1487DRE	190
1487DRESS	193
1487DS	190
1487DSSS	193
1487DT	190
1487DTSS	193
1487DV1	189
1487DV2	189
1487DV2SS	193
1487DW	189
1487DX	189
1487DXSS	193
1487DY	190
1487E12	193
1487E120	189
1487E120SS	193
1487E12SS	193
1487E24	189
1487E24SS	193
1487E2P	189
1487E36	189
1487E36SS	193
1487E48	189
1487E48SS	193
1487E4P	189
1487E4PSS	193
1487E60	189
1487E60SS	193
1487E9P	189
1487E9PSS	193
1487EB60	189
1487EFFSS	193
1487EH	190
1487EHSS	193
1487EK	190
1487EKSS	193
1487EL1SS	193
1487EL2SS	193
1487EM1	189
1487EM2	189
1487EM3	189
1487EM6	189
1487EM6SS	193
1487ERCC	190
1487ERCCSS	193
1487ERCD	190
1487ERCDSS	193
1487EREC	190
1487ERECSS	193
1487ERED	190
1487EREDSS	193
1487ES	190
1487ESSS	193
1487ET	190
1487ETSS	193
1487EV1	189
1487EV2	189
1487EV2SS	193
1487EW	189
1487EX	189
1487EXSS	193
1487EY	190
1488EE7	162
1488EH7	162
1488EJ7	162
1488EL7	162
1488HH9	162
1488HJ9	162
1488HL9	162
1488HN9	162
1488JJ11	162
1488JL11	162
1488JN11	162
1488JQ11	162
1488JS11	162
1488LL13	162
1488LN13	162
1488LQ13	162
1489MP12	177
1489MP16	177
1489MP20	177
1489MP25	177
1489MP30	177
1489MP36	177
1489MP4	177
1489MP42	177
1489MP6	177
1489MP9	177
1489P12	177
1489P16	177
1489P20	177
1489P25	177
1489P30	177
1489P36	177
1489P4	177
1489P42	177
1489P6	177
1489P9	177
1490D1	178
1490D2	178
1490D3	178
1490D4	178
1490G10	178
1490G12	178
1490G16	178
1490G4	178
1490G6	178
1490G8	178
1490H9	178
1490J12	178
1490J16	178
1490J20	178
1490K25	178
1490K30	178

Distributed by Gross Automation | +1 (262) 252-1600. | hammondsales@grossautomation.com

Technical references and CAD downloads available at www.hammondmfg.com

All dimensions in inches unless specified otherwise

Quality Products. Service Excellence.

© Hammond Manufacturing

Canada: 519.822.2960 or 905.456.3770 USA: 716.630.7030

Data Subject to change without notice

Part Number Index

Part No.	Page
1490MD1	178
1490MD2	178
1490MD3	178
1490MD4	178
1490MG10	178
1490MG12	178
1490MG16	178
1490MG4	178
1490MG6	178
1490MG8	178
1490MH9	178
1490MJ12	178
1490MJ16	178
1490MJ20	178
1490MK25	178
1490MK30	178
1495C35	303
1495D35	303
1495XK	303
1495XN	303
14A0503	280
14A0505	280
14A0705	280
14A0707	280
14A0907	280
14A0909	280
14A1105	280
14A1109	280
14A1111	280
14A1307	280
14A1311	280
14A1509	280
14A1513	284
14B10	288
14B12	288
14B14	288
14B6	288
14B8	288
14F0505	280
14F0705	280
14F0907	280
14F1109	280
14F1111	280
14F1311	280
14F1513	280
14G0503	280
14G0505	280
14G0705	280
14G0707	280
14G0907	280
14G0909	280
14G1105	280
14G1109	280
14G1111	280
14G1307	280
14G1311	280
14G1509	280
14G1513	280
14PLKS16	268
14PVC0505	284
14PVC0705	284
14PVC0707	284
14PVC0907	284
14PVC1109	284
14PVC1311	284
14PVC1513	284
14PVC1715	284
14QR	268
14QRS16	268
14QRSS	268
14R0503	280
14R0503SS	280
14R0505	280
14R0505SS	280
14R0705	280
14R0705SS	280
14R0707	280
14R0707SS	280
14R0907	280
14R0907SS	280
14R0909	280
14R0909SS	280
14R1105	280
14R1109	280
14R1109SS	280
14R1111	280
14R1111SS	280
14R1307	280
14R1311	280
14R1311SS	280
14R1509	280
14R1513	284
14R1513SS	280
14S10	288
14S12	288
14S14	288
14S16	288
14S8	288
1554B2GY	78
1554B2GYCL	78
1554B2GYSL	78
1554BPL	78
1554C2GY	78
1554C2GYCL	78
1554C2GYSL	78
1554CPL	78
1554D2GY	78
1554D2GYCL	78
1554D2GYSL	78
1554E2GY	78
1554E2GYCL	78
1554E2GYSL	78
1554EE2GY	78
1554EE2GYCL	78
1554EE2GYSL	78
1554EPL	78
1554F2GY	78
1554F2GYCL	78
1554F2GYSL	78
1554FPL	78
1554FT	78
1554G2GY	78
1554G2GYCL	78
1554G2GYSL	78
1554H2GY	78
1554H2GYCL	78
1554H2GYSL	78
1554HPL	78
1554J2GY	78
1554J2GYCL	78
1554J2GYSL	78
1554JPL	78
1554K2GY	78
1554K2GYCL	78
1554K2GYSL	78
1554L2GY	78
1554L2GYCL	78
1554L2GYSL	78
1554LA2GY	78
1554LA2GYCL	78
1554LA2GYSL	78
1554LPL	78
1554MPB1	179
1554MPB1A	179
1554MPB2	179
1554MPB2D	179
1554MPB3	179
1554MPB4	179
1554MPB6	179
1554MPB6A	179
1554MPB6B	179
1554N2GY	78
1554N2GYCL	78
1554N2GYSL	78
1554NPL	78
1554P2GY	78
1554P2GYCL	78
1554P2GYSL	78
1554PB1	179
1554PB1A	179
1554PB2	179
1554PB2D	179
1554PB3	179
1554PB4	179
1554PB6	179
1554PB6A	179
1554PB6B	179
1554Q2GY	78
1554Q2GYCL	78
1554Q2GYSL	78
1554QA2GY	78
1554QA2GYCL	78
1554QA2GYSL	78
1554QPL	78
1554R2GY	78
1554R2GYCL	78
1554R2GYSL	78
1554RPL	78
1554S2GY	78
1554S2GYCL	78
1554S2GYSL	78
1554T2GY	78
1554T2GYCL	78
1554T2GYSL	78
1554U2GY	78
1554U2GYCL	78
1554U2GYSL	78
1554UPL	78
1554V2GY	78
1554V2GYCL	78
1554V2GYSL	78
1554VA2GY	78
1554VA2GYCL	78
1554VA2GYSL	78
1554VAPL	78
1554VB2GY	78
1554VB2GYCL	78
1554VB2GYSL	78
1554VPL	78
1554W2GY	78
1554W2GYCL	78
1554W2GYSL	78
1554WA2GY	78
1554WA2GYCL	78
1554WA2GYSL	78
1554WPL	78
1555C2F22GY	79
1555C2F42GY	79
1555CFPL	79
1555F2F17GY	79
1555F2F42GY	79
1555FFPL	79
1555H2F17GY	79
1555H2F42GY	79
1555HFPL	79
1555J2F17GY	79
1555J2F42GY	79
1555JFPL	79
1555N2F17GY	79
1555N2F42GY	79
1555NFPL	79
1590Z060	71
1590Z060BK	71
1590Z060GY	71
1590Z061	71
1590Z061BK	71
1590Z061GY	71
1590Z062	71
1590Z062BK	71
1590Z062GY	71
1590Z063	72
1590Z063BK	72
1590Z063GY	72
1590Z100	71
1590Z100BK	71
1590Z100GY	71
1590Z100PL	71
1590Z110	71
1590Z110BK	71
1590Z110GY	71
1590Z119	71
1590Z119BK	71
1590Z119GY	71
1590Z119PL	71
1590Z120	71
1590Z120BK	71
1590Z120GY	71
1590Z120PL	71
1590Z130	72
1590Z130BK	72
1590Z130GY	72
1590Z135	72
1590Z135BK	72
1590Z135GY	72
1590Z140	72
1590Z140BK	72
1590Z140GY	72
1590Z140PL	72
1590Z150	72
1590Z150BK	72
1590Z150GY	72
1590Z150PL	72
1590Z155	72
1590Z155BK	72

Distributed by Gross Automation | +1 (262) 252-1600. | hammondsales@grossautomation.com

© Hammond Manufacturing

Part Number Index

Part No.	Page
1590Z155GY	72
1590Z160	72
1590Z160BK	72
1590Z160GY	72
1590Z160PL	72
1590Z162	72
1590Z162BK	72
1590Z162GY	72
1590Z162PL	72
1590Z164	72
1590Z164BK	72
1590Z164GY	72
1590Z164PL	72
1590Z166	72
1590Z166BK	72
1590Z166GY	72
1590Z166PL	72
1590Z231	72
1590Z231BK	72
1590Z231GY	72
1590Z231PL	72
1590Z235	72
1590Z235BK	72
1590Z235GY	72
1590Z235PL	72
1590ZGRP081	81
1590ZGRP081PL	81
1590ZGRP082	81
1590ZGRP082PL	81
1590ZGRP083	81
1590ZGRP083PL	81
1590ZGRP084	81
1590ZGRP121	81
1590ZGRP121PL	81
1590ZGRP123	81
1590ZGRP123PL	81
1590ZGRP131	81
1590ZGRP131PL	81
1590ZGRP161	81
1590ZGRP161PL	81
1590ZGRP162	81
1590ZGRP162PL	81
1590ZGRP163	81
1590ZGRP163PL	81
1590ZGRP233	81
1590ZGRP233PL	81
1590ZGRP234	81
1590ZGRP234PL	81
1590ZGRP235	81
1590ZGRP243	81
1590ZGRP243PL	81
1590ZGRP244	81
1590ZGRP253	81
1590ZGRP253PL	81
1590ZGRP263	81
1590ZGRP263PL	81
1590ZGRP264	81
18314000100	265
18881500001	264
18881500004	264
18881500005	264
18881500006	264
18881500007	264
18881500008	264
18881500009	264
18881500010	264
18A1309	281
18A1313	281
18A1713	281
18A1717	281
18A2117	281
18A2121	281
18A2721	281
18A3321	281
18A3327	281
18A4533	281
18A5733	281
18B212	289
18B216	289
18B220	289
18B224	289
18B230	289
18B236	289
18B324	289
18B330	289
18B336	289
18G0909	281
18G1309	281
18G1313	281
18G1515	281
18G1709	281
18G1713	281
18G1717	281
18G2109	281
18G2113	281
18G2117	281
18G2121	281
18G2709	281
18G2713	281
18G2717	281
18G2721	281
18G2727	281
18G3321	281
18G3327	281
18G3333	281
18G3921	281
18G3927	281
18G3933	281
18G4521	281
18G4527	281
18G4533	281
18G5721	281
18G5733	281
18G6927	281
18G6933	281
18P0909	281
18P1309	281
18P1309PP	285
18P1309S16	281
18P1313	281
18P1313PP	285
18P1313S16	281
18P1515	281
18P1515PP	285
18P1709	281
18P1713	281
18P1713PP	285
18P1713S16	281
18P1717	281
18P1717PP	285
18P1717S16	281
18P2109	281
18P2113	281
18P2113S16	281
18P2117	281
18P2117PP	285
18P2117S16	281
18P2121	281
18P2121PP	285
18P2121S16	281
18P2709	281
18P2713	281
18P2717	281
18P2717S16	281
18P2721	281
18P2721PP	285
18P2721S16	281
18P2727	281
18P2727PP	285
18P2727S16	281
18P3317	223
18P3321	281
18P3321PP	285
18P3321S16	281
18P3327	281
18P3327PP	285
18P3327S16	281
18P3333	281
18P3333PP	285
18P3333S16	281
18P3921	281
18P3927	281
18P3927S16	281
18P3933	281
18P3933S16	281
18P4521	281
18P4527	281
18P4533	281
18P4533S16	281
18P4545	223
18P5721	281
18P5733	281
18P5733S16	281
18P6927	281
18P6933	281
18S12	289
18S16	309
18S20	289
18S24	289
18S30	289
18S36	289
18S42	289
18S48	289
18S60	289
18S72	289
1UHD722918FTC	121
1UHD722918N4SS	125
1UHD723518FTC	121
1UHD723518N4SS	125
1UHD724118FTC	121
1UHD724118N4SS	125
1UHD844118FTC	121
1UHD844118N4SS	125
1UHD844124FTC	121
1UHD844124N4SS	125
1UHD904118FTC	121
1UHD904118N4SS	125
1UHD904120FTC	121
1UHD904120N4SS	125
1UHD904124FTC	121
1UHD904124N4SS	125
20P1410	283
20P1814	283
20P1818	283
20P2218	283
20P2222	283
20P2818	283
20P2822	283
20P3422	283
20P3428	283
20P4022	283
20P4028	283
20P4034	283
20P4634	283
22P5038	283
22P5644	283
22P5656	283
22P6856	283
22P6868	283
2CBRK	157
2CBRSK	157
2CCSTL	161
2CCSTN	161
2CDMK	158
2CDSTP	158
2CHPS	158
2CLB262418	150
2CLB263618	150
2CLB264818	150
2CLB266018	150
2CLBC2436	160
2CLBC3636	160
2CLBC4836	160
2CLBC6036	160
2CLBW24	161
2CLBW36	161
2CLBW48	161
2CLBW60	161
2CLBX262418	150
2CLBX263618	150
2CLBX264818	150
2CLBX266018	150
2CLC2024	153
2CLC2036	153
2CLC2048	153
2CLC2060	153
2CLD24R	154
2CLD24X	159
2CLD82436	151
2CLD82443	151
2CLD83636	151
2CLD83643	151
2CLD84836	151
2CLD84843	151
2CLD86036	151
2CLD86043	151
2CLDC2436	161
2CLDC2443	161
2CLDC3636	161
2CLDC3643	161
2CLDC4836	161
2CLDC4843	161
2CLDC6036	161
2CLDC6043	161

Distributed by Gross Automation | +1 (262) 252-1600. | hammondsales@grossautomation.com

Technical references and CAD downloads available at www.hammondmfg.com

All dimensions in inches unless specified otherwise

© Hammond Manufacturing

Quality Products. Service Excellence.

Canada: 519.822.2960 or 905.456.3770 USA: 716.630.7030

Data Subject to change without notice

Part Number Index

Part No.	Page
2CLF24	160
2CLF36	160
2CLF48	160
2CLF60	160
2CLP42418	160
2CLP43618	160
2CLP44818	160
2CLP46018	160
2CLP82418	160
2CLP83618	160
2CLP84818	160
2CLP86018	160
2CLPS	158
2CLS	159
2CLT202436	152
2CLT202443	152
2CLT203636	152
2CLT203643	152
2CLT204836	152
2CLT204843	152
2CLT206036	152
2CLT206043	152
2CLTW24	159
2CMBPK	158
2CMC24	156
2CMC36	156
2CMC48	156
2CMC60	156
2CRTK	157
2CSB262418	150
2CSB263618	150
2CSB264818	150
2CSB266018	150
2CSBC2436	160
2CSBC3636	160
2CSBC4836	160
2CSBC6036	160
2CSBW24	161
2CSBW36	161
2CSBW48	161
2CSBW60	161
2CSBX262418	150
2CSBX263618	150
2CSBX264818	150
2CSBX266018	150
2CSC2024	153
2CSC2036	153
2CSC2048	153
2CSC2060	153
2CSD24R	154
2CSD24X	159
2CSD82436	151
2CSD82443	151
2CSD83636	151
2CSD83643	151
2CSD84836	151
2CSD84843	151
2CSD86036	151
2CSD86043	151
2CSDC2436	161
2CSDC2443	161
2CSDC3636	161
2CSDC3643	161
2CSDC4836	161
2CSDC4843	161
2CSDC6036	161
2CSDC6043	161
2CSF24	160
2CSF36	160
2CSF48	160
2CSF60	160
2CSFB19	156
2CSFB24	156
2CSFT19	156
2CSFT24	156
2CSP42418	160
2CSP43618	160
2CSP44818	160
2CSP46018	160
2CSP82418	160
2CSP83618	160
2CSP84818	160
2CSP86018	160
2CSS	159
2CST202436	152
2CST202443	152
2CST203636	152
2CST203643	152
2CST204836	152
2CST204843	152
2CST206036	152
2CST206043	152
2CSTW24	159
2CTRK	157
2CTRSK36	157
2CTRSK43	157
2CWBP24	155
2CWBP36	155
2CWBP48	155
2CWBP60	155
2CWCP24	155
2CWCP36	155
2CWCP48	155
2CWCP60	155
2CWDP24	155
2CWDP36	155
2CWDP48	155
2CWDP60	155
2CWDSR	156
2D1K12	276
2D1K16	276
2D1K20	276
2D1K24	276
2D1K30	276
2D2K12	276
2D2K16	276
2D2K20	276
2D2K24	276
2D2K30	276
2DCK12	276
2DCK16	276
2DCK20	276
2DCK24	276
2DCK30	276
2DMK12	276
2DMK16	276
2DMK20	276
2DMK24	276
2DMK30	276
2QPL	273
2QTR	273
2SLI	273
2SQI7	273
2SQK7	273
2SSQTR	273
2TRI7	273
2TRK7	273
2UD605012FFTC	117
2UD605012FTC	115
2UD605018FFTC	117
2UD606212FFTC	117
2UD606212FTC	115
2UD606218FFTC	117
2UD726212FFTC	117
2UD726212FTC	115
2UD726218FFTC	117
2UD727412FFTC	117
2UD727412FTC	115
2UD727418FFTC	117
2UD727424FFTC	117
2UDCP604912FFTC	119
2UDCP606112FFTC	119
2UDCP726112FFTC	119
2UDCP727312FFTC	119
2UDCP727318FFTC	119
2UHD725518FTC	121
2UHD725518N4SS	125
2UHD726718FTC	121
2UHD726718N4SS	125
2UHD727918FTC	121
2UHD727918N4SS	125
2UHD727924FTC	121
2UHD727924N4SS	125
2UHD847918FTC	121
2UHD847918N4SS	125
2UHD847924FTC	121
2UHD847924N4SS	125
2UHD907918FTC	121
2UHD907918N4SS	125
2UHD907920FTC	121
2UHD907920N4SS	125
2UHD907924FTC	121
2UHD907924N4SS	125
2WKL	273
3UHD7210118FTC	121
3UHD7210118N4SS	125
3UHD7211918FTC	121
3UHD7211918N4SS	125
3UHD8411918FTC	121
3UHD8411918N4SS	125
3UHD8411924FTC	121
3UHD8411924N4SS	125
3UHD9011924FTC	121
3UHD9011924N4SS	125
4UHD8415718FTC	121
4UHD8415718N4SS	125
4UHD9015718FTC	121
4UHD9015718N4SS	125
60AWFW	286
60AWFWG	286
60AWHW	286
60AWHWG	286
60FD14	286
60TWFW	286
60TWFWG	286
60TWHW	286
60TWHWG	286
60TYFW	286
60TYFWG	286
60TYHW	286
60TYHWG	286
72FD14	286
72FD20	286
72FD26	286
72FD9	286
72WFW	286
72WFWG	286
72WHW	286
72WHWG	286
72XFW	286
72XFWG	286
72XHW	286
72XHWG	286
72YFW	286
72YFWG	286
72YHW	286
72YHWG	286
72ZWFW	286
72ZWFWG	286
72ZWHW	286
72ZWHWG	286
72ZXFW	286
72ZXFWG	286
72ZXHW	286
72ZXHWG	286
72ZYFW	286
72ZYFWG	286
72ZYHW	286
72ZYHWG	286
90BWFW	286
90BWFWG	286
90BWHW	286
90BWHWG	286
90BYFW	286
90BYFWG	286
90BYHW	286
90BYHWG	286
90FD14	286
90FD20	286
90FD26	286
90FD9	286
90YFW	286
90YFWG	286
90YHW	286
90YHWG	286
90YWFW	286
90YWFWG	286
90YWHW	286
90YWHWG	286
A1868	284
A2068	280
AHK1	271
AHK2	271
AHK3	271
AHKL1	271
AHKL2	271
AHKL3	271
AK1494FD	302
AKIT316ST	307
AKU	302
AP1612	285
AP1612PP	287
AP1616	285
AP1616PP	287

Distributed by Gross Automation | +1 (262) 252-1600. | hammondsales@grossautomation.com

Part Number Index

Part No.	Page
AP1620	285
AP1620PP	287
AP2016	285
AP2016PP	287
AP2020	285
AP2020PP	287
AP2024	285
AP2024PP	287
AP2416	285
AP2416PP	287
AP2420	285
AP2420PP	287
AP2424	285
AP2424PP	287
AP3020	285
AP3020PP	287
AP3024	285
AP3024PP	287
AP3030	285
AP3030PP	287
AP3624	285
AP3624PP	287
AP3630	285
AP3630PP	287
AP4224	285
AP4224PP	287
AP4230	285
AP4236	285
AP4836	285
BDN4XN1	259
BKFM6012	312
BKFM6018	312
BKFM7218	312
BKFM7224	312
BKWM2408	312
BKWM3010	312
BKWM3612	312
BKWM4212	312
BKWM4812	312
BPAK	302
C3R10104ESCNK	211
C3R10104ESCNKAL	213
C3R10104SC	210
C3R10104SCNKO	209
C3R10106ESCNK	211
C3R10106ESCNKAL	213
C3R10106SC	210
C3R10106SCNKO	209
C3R1084SC	210
C3R1086HCLO	230
C3R1086HCR	212
C3R1086SC	210
C3R12104SC	210
C3R12106HCLO	230
C3R12106HCR	212
C3R12106SC	210
C3R121210HCR	212
C3R12124ESCNK	211
C3R12124ESCNKAL	213
C3R12124SC	210
C3R12124SCNKO	209
C3R12126ESCNK	211
C3R12126ESCNKAL	213
C3R12126HCLO	230
C3R12126HCR	212
C3R12126SC	210
C3R12126SCNKO	209
C3R12128SC	210
C3R1244SC	210
C3R1284SC	210
C3R1286SC	210
C3R15126SC	210
C3R15128SC	210
C3R16126HCLO	230
C3R16126HCR	229
C3R16126SC	210
C3R16126SCNKO	209
C3R16166ESCNK	211
C3R16166HCLO	230
C3R16166HCR	229
C3R18124SC	210
C3R18126SC	210
C3R18128SC	210
C3R181810HCR	229
C3R181810SC	210
C3R18184SC	210
C3R18186ESCNK	211
C3R18186HCR	229
C3R18186SC	210
C3R18186SCNKO	209
C3R18188SC	210
C3R1866SC	210
C3R20166HCLO	230
C3R20166HCR	229
C3R20208HCLO	230
C3R20208HCR	229
C3R24126SC	210
C3R24168SC	210
C3R241810SC	210
C3R24186SC	210
C3R24188SC	210
C3R24208HCLO	230
C3R24208HCR	229
C3R24208SC	210
C3R242410HCR	229
C3R242410SC	210
C3R242412SC	210
C3R24246ESCNK	211
C3R24246SC	210
C3R24248HCLO	230
C3R24248HCR	229
C3R24248SC	210
C3R2488SC	210
C3R302410HCR	229
C3R302410SC	210
C3R30248HCLO	230
C3R30248HCR	229
C3R30248SC	210
C3R303012HCR	229
C3R303012SC	210
C3R303016HCR	229
C3R303016SC	210
C3R30308HCR	229
C3R362412HCR	229
C3R363012HCR	229
C3R363012SC	210
C3R363610HCR	229
C3R363612HCR	229
C3R363612SC	210
C3R423012HCR	229
C3R423612HCR	229
C3R444SC	210
C3R483612HCR	229
C3R483616HCR	229
C3R483616SC	210
C3R48368SC	210
C3R603612HCR	229
C3R644HCR	212
C3R644SC	210
C3R664ESCNK	211
C3R664ESCNKAL	213
C3R664HCR	212
C3R664SC	210
C3R664SCNKO	209
C3R666SC	210
C3R864HCLO	230
C3R864HCR	212
C3R864SC	210
C3R884ESCNK	211
C3R884ESCNKAL	213
C3R884SC	210
C3R884SCNKO	209
C3R886ESCNK	211
C3R886ESCNKAL	213
C3R886HCLO	230
C3R886HCR	212
C3R886SC	210
C3R888SC	210
C3RHCLOMFK1	230
C3RHCLOMFK2	230
C3RHCLOPK1	230
C3RHCLOPK2	230
C3RMC202010	222
C3RMC271310	222
C3RMC302010	222
C3RMC303010	222
C3RMC363612	222
C3RMC484812	222
C3RWT10116	201
C3RWT1024	201
C3RWT1036	201
C3RWT1048	201
C3RWT1060	201
C3RWT1072	201
C3RWT1096	201
C3RWT12116	201
C3RWT1224	201
C3RWT1236	201
C3RWT1248	201
C3RWT1260	201
C3RWT1272	201
C3RWT1284	201
C3RWT1296	201
C3RWT412	201
C3RWT418	201
C3RWT424	201
C3RWT436	201
C3RWT448	201
C3RWT460	201
C3RWT472	201
C3RWT612	201
C3RWT618	201
C3RWT624	201
C3RWT636	201
C3RWT648	201
C3RWT660	201
C3RWT672	201
C3RWT8116	201
C3RWT812	201
C3RWT824	201
C3RWT836	201
C3RWT848	201
C3RWT860	201
C3RWT872	201
C3RWT896	201
CAGKIT1032-100	140
CAGKIT1032-25	140
CC6101	241
CC6201	241
CC6301	241
CC6401	241
CC6501	241
CC6601	241
CGK	218
CGK125	216
CGK225	218
CGK400	218
CGK600	218
CHKO10104	206
CHKO10106	206
CHKO1084	206
CHKO1086	206
CHKO12104	206
CHKO12106	206
CHKO12124	206
CHKO12126	206
CHKO1284	206
CHKO16124	206
CHKO16126	206
CHKO16166	206
CHKO18124	206
CHKO18126	206
CHKO18186	206
CHKO24186	206
CHKO24246	206
CHKO30246	206
CHKO36246	206
CHKO36248	206
CHKO644	206
CHKO663	206
CHKO664	206
CHKO666	206
CHKO864	206
CHKO884	206
CHKO886	206
CMC202010	219
CMC271310	219
CMC302010	219
CMC303010	219
CMC363612	219
CMC484812	219
CMCO241610	221
CMCQ303010	220
CMCQ363612	220
CMCQ484812	220
CMCQP1	220
CMCQP2	220
CMCQP3	220
CN4SB103	215
CN4SB104	215
CN4SB203	215
CN4SB204	215
CN4SB403	215
CN4SB404	215

Distributed by Gross Automation | +1 (262) 252-1600. | hammondsales@grossautomation.com

Technical references and CAD downloads available at www.hammondmfg.com

All dimensions in inches unless specified otherwise

© Hammond Manufacturing

Quality Products. Service Excellence.

Canada: 519.822.2960 or 905.456.3770 USA: 716.630.7030

Data Subject to change without notice

Part Number Index

Part No.	Page
CN4SB603	215
CN4SB604	215
CN4SB73	215
CN4SB74	215
CN4ST2103	218
CN4ST2104	218
CN4ST2203	218
CN4ST273	218
CN4ST274	218
CN4ST3103	218
CN4ST3104	218
CN4ST3203	218
CN4ST3204	218
CN4ST3403	218
CN4ST373	218
CN4ST374	218
CN4ST4103	218
CN4ST4104	218
CN4ST4203	218
CN4ST4204	218
CN4ST4403	218
CN4ST4404	218
CN4ST4603	218
CN4ST4604	218
CN4ST473	218
CN4ST474	218
CN4ST5203	218
CN4ST5204	218
CN4ST5403	218
CN4ST5404	218
CN4ST5603	218
CN4ST5604	218
CN4ST6103	218
CN4ST6104	218
CN4ST6203	218
CN4ST6204	218
CN4ST6403	218
CN4ST6404	218
CN4ST6603	218
CN4ST6604	218
CS10104	205
CS10106	205
CS1084	205
CS1086	205
CS12104	205
CS12106	205
CS12124	205
CS12126	205
CS12128	205
CS1284	205
CS16124	205
CS16126	205
CS16143	205
CS16166	205
CS16168	205
CS18124	205
CS18126	205
CS18143	205
CS18184	205
CS18186	205
CS18188	205
CS20143	205
CS202010	205
CS24186	205
CS242410	205
CS24244	205
CS24246	205
CS24248	205
CS302010	205
CS30246	205
CS362410	205
CS36246	205
CS36248	205
CS363612	205
CS36366	205
CS443	205
CS444	205
CS644	205
CS663	205
CS664	205
CS666	205
CS863	205
CS864	205
CS884	205
CS886	205
CSB100	214
CSB103	214
CSB104	214
CSB200	214
CSB203	214
CSB204	214
CSB400	214
CSB403	214
CSB404	214
CSB600	214
CSB603	214
CSB604	214
CSB70	214
CSB73	214
CSB74	214
CSBL125B	216
CSBL125T	216
CSBL225	216
CSBL400	216
CSBL600	216
CSFC1010	311
CSFC108	311
CSFC1212	311
CSFC128	311
CSFC1616	311
CSFC1812	311
CSFC1818	311
CSFC2418	311
CSFC2424	311
CSFC66	311
CSFC86	311
CSFC88	311
CSG10104	207
CSG10106	207
CSG12106	207
CSG12124	207
CSG12126	207
CSG12128	207
CSG18126	207
CSG18186	207
CSG18188	207
CSG24246	207
CSG24248	207
CSG664	207
CSG666	207
CSG884	207
CSG886	207
CSKO10104	204
CSKO10106	204
CSKO1084	204
CSKO1086	204
CSKO12104	204
CSKO12106	204
CSKO12124	204
CSKO12126	204
CSKO12128	204
CSKO1284	204
CSKO16124	204
CSKO16126	204
CSKO16143	204
CSKO16166	204
CSKO16168	204
CSKO18124	204
CSKO18126	204
CSKO18143	204
CSKO18184	204
CSKO18186	204
CSKO20143	204
CSKO202010	204
CSKO24186	204
CSKO242410	204
CSKO24244	204
CSKO24246	204
CSKO24248	204
CSKO302010	204
CSKO30246	204
CSKO362410	204
CSKO36246	204
CSKO443	204
CSKO444	204
CSKO644	204
CSKO663	204
CSKO664	204
CSKO666	204
CSKO863	204
CSKO864	204
CSKO884	204
CSKO886	204
CSKOG10104	208
CSKOG10106	208
CSKOG12124	208
CSKOG12126	208
CSKOG12128	208
CSKOG664	208
CSKOG666	208
CSKOG884	208
CSKOG886	208
CST2100	217
CST2103	217
CST2104	217
CST2200	217
CST2203	217
CST273	217
CST274	217
CST3100	217
CST3103	217
CST3104	217
CST3200	217
CST3203	217
CST3204	217
CST3400	217
CST3403	217
CST373	217
CST374	217
CST4100	217
CST4103	217
CST4104	217
CST4200	217
CST4203	217
CST4204	217
CST4400	217
CST4403	217
CST4404	217
CST4603	217
CST4604	217
CST473	217
CST474	217
CST5200	217
CST5203	217
CST5204	217
CST5400	217
CST5403	217
CST5404	217
CST5603	217
CST5604	217
CST6100	217
CST6103	217
CST6104	217
CST6203	217
CST6204	217
CST6400	217
CST6403	217
CST6404	217
CST6603	217
CST6604	217
CWAD10	198
CWAD12	198
CWAD2	198
CWAD4	198
CWAD6	198
CWAD8	198
CWBA260	198
CWBA460	198
CWBA660	198
CWBA860	198
CWCF10	198
CWCF12	198
CWCF2	198
CWCF4	198
CWCF6	198
CWCF8	198
CWCP10	198
CWCP10NK	198
CWCP12	198
CWCP12NK	198
CWCP2	198
CWCP2NK	198
CWCP4	198
CWCP4NK	198
CWCP6	198
CWCP6NK	198
CWCP8	198
CWCP8NK	198
CWCRD42	198
CWCRD64	198
CWCRD86	198
CWEL1045	198
CWEL1090	198
CWEL1245	198

Distributed by Gross Automation | +1 (262) 252-1600. | hammondsales@grossautomation.com

Part Number Index

Part No.	Page
CWEL1290	198
CWEL222	198
CWEL245	198
CWEL290	198
CWEL422	198
CWEL445	198
CWEL490	198
CWEL622	198
CWEL645	198
CWEL690	198
CWEL822	198
CWEL845	198
CWEL890	198
CWHD10	198
CWHD12	198
CWHD2	198
CWHD4	198
CWHD6	198
CWHD8	198
CWHW10	198
CWHW12	198
CWHW2	198
CWHW4	198
CWHW6	198
CWHW8	198
CWJO10	198
CWJO12	198
CWJO2	198
CWJO4	198
CWJO6	198
CWJO8	198
CWRD108	198
CWRD1210	198
CWRD128	198
CWRD42	198
CWRD64	198
CWRD86	198
CWSC10120NK	197
CWSC1012NK	197
CWSC1024NK	197
CWSC1036NK	197
CWSC1048NK	197
CWSC1060NK	197
CWSC1072NK	197
CWSC1096NK	197
CWSC1212	197
CWSC12120NK	197
CWSC1212NK	197
CWSC1224	197
CWSC1224NK	197
CWSC1236	197
CWSC1236NK	197
CWSC1248	197
CWSC1248NK	197
CWSC1260	197
CWSC1260NK	197
CWSC1272NK	197
CWSC1296NK	197
CWSC212	197
CWSC2120	197
CWSC2120NK	197
CWSC212NK	197
CWSC224	197
CWSC224NK	197
CWSC236	197
CWSC236NK	197
CWSC248	197
CWSC248NK	197
CWSC260	197
CWSC260NK	197
CWSC412	197
CWSC4120	197
CWSC4120NK	197
CWSC412NK	197
CWSC418NK	197
CWSC424	197
CWSC424NK	197
CWSC436	197
CWSC436NK	197
CWSC448	197
CWSC448NK	197
CWSC460	197
CWSC460NK	197
CWSC472	197
CWSC472NK	197
CWSC612	197
CWSC6120	197
CWSC6120NK	197
CWSC612NK	197
CWSC618NK	197
CWSC624	197
CWSC624NK	197
CWSC636	197
CWSC636NK	197
CWSC648	197
CWSC648NK	197
CWSC660	197
CWSC660NK	197
CWSC672	197
CWSC672NK	197
CWSC812	197
CWSC8120	197
CWSC8120NK	197
CWSC812NK	197
CWSC818NK	197
CWSC824	197
CWSC824NK	197
CWSC836	197
CWSC836NK	197
CWSC848	197
CWSC848NK	197
CWSC860	197
CWSC860NK	197
CWSC872NK	197
CWST10120NK	198
CWST1012NK	198
CWST1024NK	198
CWST1036NK	198
CWST1048NK	198
CWST1060NK	198
CWST1072NK	198
CWST1096NK	198
CWST12120NK	198
CWST1212NK	198
CWST1224NK	198
CWST1236NK	198
CWST1248NK	198
CWST1260NK	198
CWST1272NK	198
CWST1296NK	198
CWST212	198
CWST2120	198
CWST2120NK	198
CWST212NK	198
CWST224	198
CWST224NK	198
CWST236	198
CWST236NK	198
CWST248	198
CWST248NK	198
CWST260	198
CWST260NK	198
CWST272	198
CWST296	198
CWST412	198
CWST4120	198
CWST4120NK	198
CWST412NK	198
CWST418NK	198
CWST424	198
CWST424NK	198
CWST436	198
CWST436NK	198
CWST448	198
CWST448NK	198
CWST460	198
CWST460NK	198
CWST472	198
CWST472NK	198
CWST496	198
CWST496NK	198
CWST612	198
CWST6120	198
CWST6120NK	198
CWST612NK	198
CWST618NK	198
CWST624	198
CWST624NK	198
CWST636	198
CWST636NK	198
CWST648	198
CWST648NK	198
CWST660	198
CWST660NK	198
CWST672	198
CWST672NK	198
CWST696	198
CWST696NK	198
CWST812	198
CWST8120	198
CWST8120NK	198
CWST812NK	198
CWST818NK	198
CWST824	198
CWST824NK	198
CWST836	198
CWST836NK	198
CWST848	198
CWST848NK	198
CWST860	198
CWST860NK	198
CWST872	198
CWST872NK	198
CWST896	198
CWST896NK	198
CWTF10	198
CWTF12	198
CWTF2	198
CWTF4	198
CWTF6	198
CWTF8	198
CWTL10	198
CWTL12	198
CWTL2	198
CWTL4	198
CWTL6	198
CWTL8	198
DK12GY	303
DK12LG	303
DK12S16	303
DK16GY	303
DK16LG	303
DK16S16	303
DK20GY	303
DK20LG	303
DK20S16	303
DK24GY	303
DK24LG	303
DK24S16	303
DK30GY	303
DK30LG	303
DK30S16	303
DK36GY	303
DK36LG	303
DK36S16	303
DK42GY	303
DK42LG	303
DK48GY	303
DK48LG	303
DK60GY	303
DK60LG	303
DK72GY	303
DMS1615	143
DNFF080BK115	250
DNFF080BK230	250
DNFF080CG115	250
DNFF080CG230	250
DNFF080GY115	250
DNFF080GY230	250
DNFF080LG115	250
DNFF080LG230	250
DNFF120BK115	250
DNFF120BK230	250
DNFF120CG115	250
DNFF120CG230	250
DNFF120GY115	250
DNFF120GY230	250
DNFF120LG115	250
DNFF120LG230	250
DNFF150BK115	250
DNFF150BK230	250
DNFF150CG115	250
DNFF150CG230	250
DNFF150GY115	250
DNFF150GY230	250
DNFF150LG115	250
DNFF150LG230	250
DNFF254BK115	250
DNFF254BK230	250
DNFF254CG115	250
DNFF254CG230	250
DNFF254GY115	250
DNFF254GY230	250
DNFF254LG115	250

Distributed by Gross Automation | +1 (262) 252-1600. | hammondsales@grossautomation.com

Technical references and CAD downloads available at www.hammondmfg.com

All dimensions in inches unless specified otherwise

Quality Products. Service Excellence.

© Hammond Manufacturing

Canada: 519.822.2960 or 905.456.3770 USA: 716.630.7030

Data Subject to change without notice

Part Number Index

Part No.	Page
DNFF254LG230	250
DNGL	272
DSG1	299
DSTOPK	304
DTS3021A115LG	234
DTS3021A230LG	234
DTS3031A115N3LG	235
DTS3031A115N4SS	236
DTS3031A230N3LG	235
DTS3031A230N4SS	236
DTS3041A115LG	234
DTS3041A230LG	234
DTS3041A460LG	234
DTS3061A115N3LG	235
DTS3061A230N3LG	235
DTS3061A460N3LG	235
DTS3081A115N4SS	236
DTS3081A230N4SS	236
DTS3081A460N4SS	236
DTS3141A115LG	234
DTS3141A230LG	234
DTS3141A460LG	234
DTS3141SLA115LG	234
DTS3141SLA230LG	234
DTS3141SLA460LG	234
DTS3145A115LG	234
DTS3145A230LG	234
DTS3145A460LG	234
DTS3161A115N3LG	235
DTS3161A230N3LG	235
DTS3161A460N3LG	235
DTS3161SLA2N3LG	235
DTS3161SLA4N3LG	235
DTS3165A115N3LG	235
DTS3165A230N3LG	235
DTS3165A460N3LG	235
DTS3181A115N4SS	236
DTS3181A230N4SS	236
DTS3181A460N4SS	236
DTS3181SLA2N4SS	236
DTS3181SLA4N4SS	236
DTS3185A115N4SS	236
DTS3185A230N4SS	236
DTS3185A460N4SS	236
DTS3241A115LG	234
DTS3241A230LG	234
DTS3241A460LG	234
DTS3245A115LG	234
DTS3245A230LG	234
DTS3245A460LG	234
DTS3261A115N3LG	235
DTS3261A230N3LG	235
DTS3261A460N3LG	235
DTS3265A115N3LG	235
DTS3265A230N3LG	235
DTS3265A460N3LG	235
DTS3281A115N4SS	236
DTS3281A230N4SS	236
DTS3281A460N4SS	236
DTS3285A115N4SS	236
DTS3285A230N4SS	236
DTS3285A460N4SS	236
DTS3441A230LG	234
DTS3441A460LG	234
DTS3461A230N3LG	235
DTS3461A460N3LG	235
DTS3481A230N4SS	236
DTS3481A460N4SS	236
DTS3641A230LG	234
DTS3641A460LG	234
DTS3661A230N3LG	235
DTS3661A460N3LG	235
DTS3681A230N4SS	236
DTS3681A460N4SS	236
DTT6101B115LG	235
DTT6101B230LG	235
DTT6201B115LG	235
DTT6201B230LG	235
DTT6201B460LG	235
DTT6301B115LG	235
DTT6301B230LG	235
DTT6301B460LG	235
DTT6401B115LG	235
DTT6401B230LG	235
DTT6401B460LG	235
DTT6601B460LG	235
DTT6801B460LG	235
EB150WT	241
EB30WT	241
EB60WT	241
EB90WT	241
ECP12126	165
ECP12168	165
ECP161610	165
ECP162010	165
ECP202412	165
ECP20246	165
ECPH12	165
ECPH16	165
ECPH20	165
ECPH24	165
ECPP1212	165
ECPP1216	165
ECPP1616	165
ECPP1620	165
ECPP2024	165
EFGK	279
EHLL	276
EHLLSS	276
EHLNL	276
EHLNLSS	276
EHLPL	276
EHLPLSS	276
EHTL	276
EJ10106	4
EJ10106AL	69
EJ10106LG	4
EJ10106S16	43
EJ10106SS	43
EJ10125	4
EJ10125LG	4
EJ1084	4
EJ1084AL	69
EJ1084LG	4
EJ1084S16	43
EJ1084SS	43
EJ1086	4
EJ1086AL	69
EJ1086LG	4
EJ1086S16	43
EJ1086SS	43
EJ12105	4
EJ12105AL	69
EJ12105LG	4
EJ12105S16	43
EJ12105SS	43
EJ12106AL	69
EJ12106S16	43
EJ12106SS	43
EJ12108	4
EJ12108AL	69
EJ12108LG	4
EJ12108S16	43
EJ12108SS	43
EJ12124	4
EJ12124AL	69
EJ12124LG	4
EJ12124S16	43
EJ12124SS	43
EJ12126	4
EJ12126AL	69
EJ12126LG	4
EJ12126S16	43
EJ12126SS	43
EJ12146	4
EJ12146LG	4
EJ1264	4
EJ1264AL	69
EJ1264LG	4
EJ1264S16	43
EJ1264SS	43
EJ14126	4
EJ14126AL	69
EJ14126LG	4
EJ14126S16	43
EJ14126SS	43
EJ14128	4
EJ14128AL	69
EJ14128LG	4
EJ14128S16	43
EJ14128SS	43
EJ14166	4
EJ14166LG	4
EJ1486	4
EJ1486LG	4
EJ16106	4
EJ16106LG	4
EJ161410	4
EJ161410AL	69
EJ161410LG	4
EJ161410S16	43
EJ161410SS	43
EJ16146	4
EJ16146AL	69
EJ16146LG	4
EJ16146S16	43
EJ16146SS	43
EJ16148	4
EJ16148AL	69
EJ16148LG	4
EJ16148S16	43
EJ16148SS	43
EJ443	4
EJ443AL	69
EJ443LG	4
EJ443S16	43
EJ443SS	43
EJ444	4
EJ444AL	69
EJ444LG	4
EJ444S16	43
EJ444SS	43
EJ643	4
EJ643AL	69
EJ643LG	4
EJ643S16	43
EJ643SS	43
EJ644	4
EJ644AL	69
EJ644LG	4
EJ644S16	43
EJ644SS	43
EJ664	4
EJ664AL	69
EJ664LG	4
EJ664S16	43
EJ664SS	43
EJ683	4
EJ683LG	4
EJ8104	4
EJ8104LG	4
EJ863	4
EJ863AL	69
EJ863LG	4
EJ863S16	43
EJ863SS	43
EJ866	4
EJ866AL	69
EJ866LG	4
EJ866S16	43
EJ866SS	43
EJ884	4
EJ884AL	69
EJ884LG	4
EJ884S16	43
EJ884SS	43
EJPA	272
EJQTR	273
EJSSQTR	273
EJWKL	273
EJWKNL	273
EN4DH162415LG	21
EN4DH162415WLG	21
EN4DH162424LG	21
EN4DH162424WLG	21
EN4DH202424LG	21
EN4DH202424WLG	21
EN4DH242415LG	21
EN4DH242415WLG	21
EN4DH242424LG	21
EN4DH242424WLG	21
EN4DH362424LG	21
EN4DH362424WLG	21
EN4DH482424LG	21
EN4DH482424WLG	21
EN4DSC20228GY	109
EN4DSC20228SS	112
EN4DSC24228GY	109
EN4DSC24228SS	112
EN4DSC24268GY	109
EN4DSC24268SS	112
EN4DSC30268GY	109
EN4DSC30268SS	112
EN4DSC36268GY	109

Distributed by Gross Automation | +1 (262) 252-1600. | hammondsales@grossautomation.com

Part Number Index

Part No.	Page
EN4DSC36268SS	112
EN4DSC36328GY	109
EN4DSC36328SS	112
EN4DSC423212GY	109
EN4DSC423212SS	112
EN4DSC423812GY	109
EN4DSC423812SS	112
EN4DSC483812GY	109
EN4DSC483812SS	112
EN4DSC603812GY	109
EN4DSC603812SS	112
EN4PLUG40	277
EN4SD12106GY	14
EN4SD12106LG	14
EN4SD12126GY	14
EN4SD12126LG	14
EN4SD12126S16	46
EN4SD12126SS	46
EN4SD12126WSS	49
EN4SD12246GY	14
EN4SD12246LG	14
EN4SD12248GY	15
EN4SD12248LG	15
EN4SD161210GY	15
EN4SD161210LG	15
EN4SD161210S16	47
EN4SD161210SS	47
EN4SD161210WSS	49
EN4SD16126GY	14
EN4SD16126LG	14
EN4SD16126S16	46
EN4SD16126SS	46
EN4SD16126WGY	19
EN4SD16126WLG	19
EN4SD16126WSS	49
EN4SD16128GY	15
EN4SD16128LG	15
EN4SD16128S16	46
EN4SD16128SS	46
EN4SD16128WGY	19
EN4SD16128WLG	19
EN4SD161610GY	15
EN4SD161610LG	15
EN4SD161610S16	47
EN4SD161610SS	47
EN4SD16166GY	14
EN4SD16166LG	14
EN4SD16166S16	46
EN4SD16166SS	46
EN4SD16168GY	15
EN4SD16168LG	15
EN4SD16168S16	46
EN4SD16168SS	46
EN4SD162010GY	15
EN4SD162010LG	15
EN4SD162010S16	47
EN4SD162010SS	47
EN4SD16206GY	14
EN4SD16206LG	14
EN4SD16206SS	46
EN4SD16208GY	15
EN4SD16208LG	15
EN4SD16208S16	46
EN4SD16208SS	46
EN4SD20126GY	14
EN4SD20126LG	14
EN4SD20128GY	15
EN4SD20128LG	15
EN4SD201610GY	15
EN4SD201610LG	15
EN4SD201610S16	47
EN4SD201610SS	47
EN4SD201610WSS	49
EN4SD201612GY	16
EN4SD201612LG	16
EN4SD20166GY	14
EN4SD20166LG	14
EN4SD20166S16	46
EN4SD20166SS	46
EN4SD20166WGY	19
EN4SD20166WLG	19
EN4SD20166WSS	49
EN4SD20168GY	15
EN4SD20168LG	15
EN4SD20168S16	47
EN4SD20168SS	47
EN4SD20168WGY	19
EN4SD20168WLG	19
EN4SD20168WSS	49
EN4SD202010GY	15
EN4SD202010LG	15
EN4SD202010S16	47
EN4SD202010SS	47
EN4SD202010WSS	49
EN4SD202012GY	16
EN4SD202012LG	16
EN4SD202012S16	47
EN4SD202012SS	47
EN4SD202012WGY	19
EN4SD202012WLG	19
EN4SD202012WSS	49
EN4SD20206GY	14
EN4SD20206LG	14
EN4SD20206S16	46
EN4SD20206SS	46
EN4SD20206WGY	19
EN4SD20206WLG	19
EN4SD20206WSS	49
EN4SD20208GY	15
EN4SD20208LG	15
EN4SD20208S16	47
EN4SD20208SS	47
EN4SD20208WGY	19
EN4SD20208WLG	19
EN4SD20208WSS	49
EN4SD202410GY	15
EN4SD202410LG	15
EN4SD202410S16	47
EN4SD202410SS	47
EN4SD20246GY	14
EN4SD20246LG	14
EN4SD20248GY	15
EN4SD20248LG	15
EN4SD20248SS	47
EN4SD241210GY	15
EN4SD241210LG	15
EN4SD24126GY	14
EN4SD24126LG	14
EN4SD24128GY	15
EN4SD24128LG	15
EN4SD241610GY	15
EN4SD241610LG	15
EN4SD241610S16	47
EN4SD241610SS	47
EN4SD24166GY	14
EN4SD24166LG	14
EN4SD24168GY	15
EN4SD24168LG	15
EN4SD24168S16	47
EN4SD24168SS	47
EN4SD242010GY	15
EN4SD242010LG	15
EN4SD242010S16	47
EN4SD242010SS	47
EN4SD242010SSWH	56
EN4SD242010WSS	49
EN4SD242012GY	16
EN4SD242012LG	16
EN4SD242012WGY	19
EN4SD242012WLG	19
EN4SD242016GY	16
EN4SD242016LG	16
EN4SD24206GY	15
EN4SD24206LG	15
EN4SD24206SS	46
EN4SD24206WGY	19
EN4SD24206WLG	19
EN4SD24208GY	15
EN4SD24208LG	15
EN4SD24208S16	47
EN4SD24208SS	47
EN4SD24208WGY	19
EN4SD24208WLG	19
EN4SD24208WSS	49
EN4SD242410GY	15
EN4SD242410LG	15
EN4SD242410S16	47
EN4SD242410SS	47
EN4SD242410WSS	49
EN4SD242412GY	16
EN4SD242412LG	16
EN4SD242412S16	47
EN4SD242412SS	47
EN4SD242412SSWH	56
EN4SD242412WGY	19
EN4SD242412WLG	19
EN4SD242416GY	16
EN4SD242416LG	16
EN4SD242416WGY	19
EN4SD242416WLG	19
EN4SD242420GY	16
EN4SD242420LG	16
EN4SD242420WGY	19
EN4SD242420WLG	19
EN4SD24246GY	15
EN4SD24246LG	15
EN4SD24246WGY	19
EN4SD24246WLG	19
EN4SD24248GY	15
EN4SD24248LG	15
EN4SD24248S16	47
EN4SD24248SS	47
EN4SD24248SSWH	56
EN4SD24248WGY	19
EN4SD24248WLG	19
EN4SD24248WSS	49
EN4SD243010GY	15
EN4SD243010LG	15
EN4SD243010S16	47
EN4SD243010SS	47
EN4SD243012GY	16
EN4SD243012LG	16
EN4SD24308GY	15
EN4SD24308LG	15
EN4SD24308SS	47
EN4SD30128GY	15
EN4SD30128LG	15
EN4SD30166GY	15
EN4SD30166LG	15
EN4SD30168GY	15
EN4SD30168LG	15
EN4SD302010GY	15
EN4SD302010LG	15
EN4SD302010S16	47
EN4SD302010SS	47
EN4SD30206GY	15
EN4SD30206LG	15
EN4SD30208GY	15
EN4SD30208LG	15
EN4SD30208SS	47
EN4SD302410GY	15
EN4SD302410LG	15
EN4SD302410S16	47
EN4SD302410SS	47
EN4SD302410WSS	49
EN4SD302412GY	16
EN4SD302412LG	16
EN4SD302412S16	47
EN4SD302412SS	47
EN4SD302412WGY	19
EN4SD302412WLG	19
EN4SD302412WSS	49
EN4SD302416GY	16
EN4SD302416LG	16
EN4SD302416SS	47
EN4SD302420GY	16
EN4SD302420LG	16
EN4SD302420WGY	19
EN4SD302420WLG	19
EN4SD302424GY	16
EN4SD302424LG	16
EN4SD30246GY	15
EN4SD30246LG	15
EN4SD30248GY	15
EN4SD30248LG	15
EN4SD30248S16	47
EN4SD30248SS	47
EN4SD30248SSWH	56
EN4SD30248WGY	19
EN4SD30248WLG	19
EN4SD30248WSS	49
EN4SD303010GY	16
EN4SD303010LG	16
EN4SD303010S16	47
EN4SD303010SS	47
EN4SD303012GY	16
EN4SD303012LG	16
EN4SD303012SS	47
EN4SD30308GY	15
EN4SD30308LG	15
EN4SD30308S16	47
EN4SD30308SS	47
EN4SD30368GY	15
EN4SD30368LG	15

Distributed by Gross Automation | +1 (262) 252-1600. | hammondsales@grossautomation.com

© Hammond Manufacturing

Part Number Index

Part No.	Page
EN4SD362410GY	16
EN4SD362410LG	16
EN4SD362410S16	47
EN4SD362410SS	47
EN4SD362412GY	16
EN4SD362412LG	16
EN4SD362412S16	47
EN4SD362412SS	47
EN4SD362416GY	16
EN4SD362416LG	16
EN4SD36246GY	15
EN4SD36246LG	15
EN4SD36248GY	15
EN4SD36248LG	15
EN4SD36248S16	47
EN4SD36248SS	47
EN4SD363010GY	16
EN4SD363010LG	16
EN4SD363010S16	47
EN4SD363010SS	47
EN4SD363012GY	16
EN4SD363012LG	16
EN4SD363012S16	47
EN4SD363012SS	47
EN4SD363012SSWH	56
EN4SD363016GY	16
EN4SD363016LG	16
EN4SD363016SS	47
EN4SD363020GY	16
EN4SD363020LG	16
EN4SD36306GY	15
EN4SD36306LG	15
EN4SD36308GY	15
EN4SD36308LG	15
EN4SD36308S16	47
EN4SD36308SS	47
EN4SD363610GY	16
EN4SD363610LG	16
EN4SD363610S16R	47
EN4SD363610SSR	47
EN4SD363612GY	16
EN4SD363612LG	16
EN4SD363612S16R	47
EN4SD363612SSR	47
EN4SD363612SSWH	56
EN4SD363616GY	16
EN4SD363616LG	16
EN4SD36368GY	15
EN4SD36368LG	15
EN4SD422410GY	16
EN4SD422410LG	16
EN4SD42248GY	15
EN4SD42248LG	15
EN4SD423010GY	16
EN4SD423010LG	16
EN4SD423010SSR	47
EN4SD423012GY	16
EN4SD423012LG	16
EN4SD423016GY	16
EN4SD423016LG	16
EN4SD42308GY	15
EN4SD42308LG	15
EN4SD423610GY	16
EN4SD423610LG	16
EN4SD423610S16R	47
EN4SD423610SSR	47
EN4SD423612GY	16
EN4SD423612LG	16
EN4SD423612S16R	47
EN4SD423612SSR	47
EN4SD423612SSWH	56
EN4SD423616GY	16
EN4SD423616LG	16
EN4SD42368GY	15
EN4SD42368LG	15
EN4SD42368SSR	47
EN4SD482410GY	16
EN4SD482410LG	16
EN4SD482410S16	47
EN4SD482410SS	47
EN4SD482412GY	16
EN4SD482412LG	16
EN4SD48248GY	15
EN4SD48248LG	15
EN4SD483010GY	16
EN4SD483010LG	16
EN4SD483016GY	16
EN4SD483016LG	16
EN4SD48308GY	15
EN4SD48308LG	15
EN4SD483610GY	16
EN4SD483610LG	16
EN4SD483610S16R	47
EN4SD483610SSR	47
EN4SD483612GY	16
EN4SD483612LG	16
EN4SD483612S16R	47
EN4SD483612SSR	47
EN4SD483612SSWH	56
EN4SD483616GY	16
EN4SD483616LG	16
EN4SD483616S16R	47
EN4SD483616SSR	47
EN4SD483616SSWH	56
EN4SD483620GY	16
EN4SD483620LG	16
EN4SD48368GY	15
EN4SD48368LG	15
EN4SD48368SSR	47
EN4SD603610GY	16
EN4SD603610LG	16
EN4SD603610S16R	47
EN4SD603610SSR	47
EN4SD603612GY	16
EN4SD603612LG	16
EN4SD603612S16R	47
EN4SD603612SSR	47
EN4SD603612SSWH	56
EN4SD603616GY	16
EN4SD603616LG	16
EN4SD603620GY	16
EN4SD603620LG	16
EN4SD60368GY	15
EN4SD60368LG	15
EN4SD723012GY	16
EN4SD723012LG	16
EN4SD723016GY	16
EN4SD723016LG	16
EN4SD723020GY	16
EN4SD723020LG	16
EN4SD723024GY	16
EN4SD723024LG	16
EN4SD723612GY	16
EN4SD723612LG	16
EN4SD723612S16R	47
EN4SD723612SSR	47
EN4SD723616GY	16
EN4SD723616LG	16
EN4TD244210GY	17
EN4TD244210LG	17
EN4TD24428GY	17
EN4TD24428LG	17
EN4TD24488GY	17
EN4TD24488LG	17
EN4TD304210GY	17
EN4TD304210LG	17
EN4TD304810GY	17
EN4TD304810LG	17
EN4TD30488GY	17
EN4TD30488LG	17
EN4TD306010GY	17
EN4TD306010LG	17
EN4TD306012GY	17
EN4TD306012LG	17
EN4TD364212GY	17
EN4TD364212LG	17
EN4TD364812GY	17
EN4TD364812LG	17
EN4TD366012GY	17
EN4TD366012LG	17
EN4TD484812GY	17
EN4TD484812LG	17
EP1210	282
EP1212	282
EP1224	282
EP1612	282
EP1616	282
EP1620	282
EP2012	282
EP2016	282
EP2020	282
EP2024	282
EP2412	282
EP2416	282
EP2420	282
EP2424	282
EP2430	282
EP2442	282
EP2448	282
EP3012	282
EP3016	282
EP3020	282
EP3024	282
EP3030	282
EP3036	282
EP3042	282
EP3048	282
EP3060	282
EP3624	282
EP3630	282
EP3636	282
EP3642	282
EP3648	282
EP3660	282
EP4224	282
EP4230	282
EP4236	282
EP4824	282
EP4830	282
EP4836	282
EP4848	282
EP6036	282
EP7230	282
EP7236	282
EPA	272
EPDHR10	21
EPDHR12	21
EPDHR19	21
EPDHR26	21
EPDHR7	21
EPG1210	282
EPG1212	282
EPG1224	282
EPG1612	282
EPG1616	282
EPG1620	282
EPG2012	282
EPG2016	282
EPG2020	282
EPG2024	282
EPG2412	282
EPG2416	282
EPG2420	282
EPG2424	282
EPG2430	282
EPG2442	282
EPG2448	282
EPG3012	282
EPG3016	282
EPG3020	282
EPG3024	282
EPG3030	282
EPG3036	282
EPG3042	282
EPG3048	282
EPG3060	282
EPG3624	282
EPG3630	282
EPG3636	282
EPG3642	282
EPG3648	282
EPG3660	282
EPG4224	282
EPG4230	282
EPG4236	282
EPG4824	282
EPG4830	282
EPG4836	282
EPG4848	282
EPG6036	282
EPG7230	282
EPG7236	282
EPGDH1624	21
EPGDH2024	21
EPGDH2424	21
EPGDH3624	21
EPGDH4824	21
EPINSS	274
EQTFG	279
EQTRL	291
ERP2424	293
ERP3024	293
ERP3624	293
ES16MFHD	277

Distributed by Gross Automation | +1 (262) 252-1600. | hammondsales@grossautomation.com

Part Number Index

Part No.	Page
ESF2424	291
ESF3024	291
ESF3624	291
ESP1212	290
ESP1612	290
ESP1616	290
ESP1620	290
ESP2016	290
ESP2020	290
ESP2024	290
ESP2416	290
ESP2420	290
ESP2424	290
ESP3020	290
ESP3024	290
ESP3030	290
ESP3624	290
ESP3630	290
ESP3636	290
ESP4236	290
ESP4824	290
ESP4836	290
ESP6036	290
ESSMFHD	277
EZPMFHD	277
F1868	280
F2068	280
FDS1	309
FDS1212GY	309
FDS1212LG	309
FDS1212S16	309
FDS1818GY	309
FDS1818LG	309
FDS1818S16	309
FDS2424GY	309
FDS2424LG	309
FDS2424S16	309
FKIT316ST12	307
FLHTF125A115	256
FLHTF125A230	256
FLHTF1300A115	256
FLHTF1300A230	256
FLHTF200A115	256
FLHTF200A230	256
FLHTF400A115	256
FLHTF400A230	256
FLHTF800A115	256
FLHTF800A230	256
FLK10LED	298
FLK15LED	298
FLK17LED	298
FLK18LENSE	298
FLK18MM	298
FLK18T8	298
FLK24LENSE	298
FLK24T8	298
FLK48LENSE	298
FLK48MM	298
FLK48T8	298
FLK5LED	298
FLK7LED	298
FLKDS	299
FLMTGBRK	147
FP3F115	255
FP3F230	255
FT300HA1220BK	254

Part No.	Page
FT300HA1BK	254
FT300TA1220BK	254
FT300TA1BK	254
FT600HA1220BK	254
FT600HA1BK	254
FT600TA1220BK	254
FT600TA1BK	254
FT900HA1220BK	254
FT900HA1BK	254
FT900TA1220BK	254
FT900TA1BK	254
GP063GY	300
GP063LG	300
GP134GY	300
GP134LG	300
GP136GY	300
GP136LG	300
GP1507GY	300
GP1507LG	300
GP1507S16	300
GP216GY	300
GP216LG	300
GP2207GY	300
GP2207LG	300
GP2207S16	300
GRDBAR19	146
GRDBAR23	146
GRDBAR600	146
GRDBAR800	146
GRDBARV14	146
GRDBARV16	146
GRDBARV18	146
GRDBARV20	146
GRDBARV22	146
GRDKIT01	272
GRDKIT02	272
GRDKIT03	272
GRDKIT04	272
GRDT375	273
HAK19800	145
HB2160A	255
HB2UFILTER	255
HB3250A	255
HB3UFILTER	255
HB4500A	255
HB4UFILTER	255
HCR16SZPL	145
HCR18SZPL	145
HCR20SZPL	145
HCR22SZPL	145
HCT302411H	223
HCT362011H	223
HCT363011H	223
HCT363611H	223
HCT482411H	223
HCT483011H	223
HCT483611H	223
HCT484814H	223
HFMD14105	133
HFMD1485	133
HFMD1685	133
HFMD1686	133
HFMD18105	133
HFMD1884	133
HFMD1885	133
HFMD20105	133

Part No.	Page
HFMD20106	133
HFMD2085	133
HFMD2086	133
HFMD2088	133
HFMD22105	133
HFMD2286	133
HFMDT18164	135
HFMDT18165	135
HFMDT18184	135
HFMDT18185	135
HFMDT18186	135
HFMDT20165	135
HFMDT20166	135
HFMDT20168	135
HFMDT20185	135
HGD14	140
HGD15	140
HGD16	140
HGD18	140
HGD34	140
HGD35	140
HGD36	140
HGD38	140
HGDSR10	140
HGDSR4	140
HGDSR5	140
HGDSR6	140
HGDSR8	140
HGDSR9	140
HGS3	139
HGV115	140
HGV135	140
HGV155	140
HGV175	140
HGV195	140
HGV35	140
HGV55	140
HGV75	140
HGV95	140
HIPSPK	141
HJ10106HLP	10
HJ10125HLP	10
HJ1084HLP	10
HJ1084LP	7
HJ1086HLP	10
HJ12105HLP	10
HJ12105LP	7
HJ12108HLP	10
HJ12126HLP	10
HJ12146HLP	10
HJ1264HLP	10
HJ14126HLP	10
HJ14126LP	7
HJ14128HLP	10
HJ14128LP	7
HJ14166HLP	10
HJ1486HLP	10
HJ16106HLP	10
HJ161410HLP	10
HJ161410LP	7
HJ16146HLP	10
HJ16146LP	7
HJ16148HLP	10
HJ443HLP	10
HJ443LP	7
HJ444HLP	10

Part No.	Page
HJ444LP	7
HJ643HLP	10
HJ643LP	7
HJ644HLP	10
HJ644LP	7
HJ664HLP	10
HJ664LP	7
HJ683HLP	10
HJ8104HLP	10
HJ863HLP	10
HJ863LP	7
HJ866HLP	10
HJ884HLP	10
HLF4	136
HLP4UR	293
HLP6UR	293
HLP8UR	293
HME1465	129
HME1466	129
HME1468	129
HME1485	129
HME1486	129
HME1488	129
HME1665	129
HME1666	129
HME1668	129
HME1685	129
HME1686	129
HME1688	129
HME18104	129
HME18105	129
HME18106	129
HME18108	129
HME1864	129
HME1865	129
HME1866	129
HME1868	129
HME1884	129
HME1885	129
HME1886	129
HME1888	129
HME20105	129
HME20106	129
HME20108	129
HME2045	129
HME2064	129
HME2065	129
HME2066	129
HME2068	129
HME2084	129
HME2085	129
HME2086	129
HME2088	129
HME22105	129
HME22106	129
HME2246	129
HME2265	129
HME2266	129
HME2285	129
HME2286	129
HME2288	129
HMEDBPI	145
HMEDBPK	145
HMEDW146	138
HMEDW148	138
HMEDW166	138

Distributed by Gross Automation | +1 (262) 252-1600. | hammondsales@grossautomation.com

Technical references and CAD downloads available at www.hammondmfg.com

All dimensions in inches unless specified otherwise

© Hammond Manufacturing

Quality Products. Service Excellence.

Canada: 519.822.2960 or 905.456.3770 USA: 716.630.7030

Data Subject to change without notice

Part Number Index

Part No.	Page
HMEDW168	138
HMEDW186	138
HMEDW188	138
HMEDW206	138
HMEDW208	138
HMEDW226	138
HMEDW228	138
HMEHLKL	147
HMEHLNL	147
HMEHSKL	147
HMEHSKLPL	147
HMEIPMTG	141
HMEJK	137
HMELA2	139
HMENLINS	145
HMEP1410	141
HMEP1412	141
HMEP146	143
HMEP148	143
HMEP1612	141
HMEP166	143
HMEP168	143
HMEP1810	141
HMEP1812	141
HMEP1816	141
HMEP1818	141
HMEP186	143
HMEP188	143
HMEP2010	141
HMEP2012	141
HMEP2016	141
HMEP2018	141
HMEP204	141
HMEP206	143
HMEP208	143
HMEP2210	141
HMEP2212	141
HMEP224	141
HMEP226	143
HMEP228	143
HMEPB14	143
HMEPB16	143
HMEPB18	143
HMEPB20	143
HMEPB22	143
HMEPRS1000	141
HMEPRS1200	141
HMEPRS1600	141
HMEPRS1800	141
HMEPRS800	141
HMESLCPI	145
HMESQI7	145
HMESQI8	145
HMESQK8	145
HMESWF166	144
HMESWF168	144
HMESWF186	144
HMESWF188	144
HMESWF206	144
HMESWF208	144
HMESWF226	144
HMESWF228	144
HMESWK4	144
HMESWK5	144
HMESWK6	144
HMESWK8	144
HMET14125	131
HMET14126	131
HMET14128	131
HMET16125	131
HMET16126	131
HMET16128	131
HMET18104	131
HMET18124	131
HMET18125	131
HMET18126	131
HMET18128	131
HMET18164	131
HMET18165	131
HMET18166	131
HMET18168	131
HMET18184	131
HMET18185	131
HMET18186	131
HMET18188	131
HMET1885	131
HMET1886	131
HMET20105	131
HMET20106	131
HMET20124	131
HMET20125	131
HMET20126	131
HMET20128	131
HMET20165	131
HMET20166	131
HMET20168	131
HMET20185	131
HMET20186	131
HMET20188	131
HMET22106	131
HMET22125	131
HMET22126	131
HMETRI6	145
HMETRI7	145
HMETRI8	145
HMETRK6	145
HMETRK8	145
HMIK	144
HN4FM604810	34
HN4FM604812S16	62
HN4FM604812SS	62
HN4FM604818	34
HN4FM604818S16	62
HN4FM604818SS	62
HN4FM606012	34
HN4FM606012S16	62
HN4FM606012SS	62
HN4FM606018	34
HN4FM606018S16	62
HN4FM606018SS	62
HN4FM726012	34
HN4FM726012S16	62
HN4FM726012SS	62
HN4FM726018	34
HN4FM726018S16	62
HN4FM726018SS	62
HN4FM727212	34
HN4FM727212S16	62
HN4FM727212SS	62
HN4FM727218	34
HN4FM727218S16	62
HN4FM727218SS	62
HN4FM727224	34
HN4FM727224S16	62
HN4FM727224SS	62
HN4FS602418S16	65
HN4FS602418SS	65
HN4FS603624S16	65
HN4FS603624SS	65
HN4FS722418S16	65
HN4FS722418SS	65
HN4FS722424DASS	65
HN4FS722424DS16	65
HN4FS722424S16	65
HN4FS722424SS	65
HN4FS722430DASS	65
HN4FS722430DS16	65
HN4FS722436DASS	65
HN4FS722436DS16	65
HN4FS722518	39
HN4FS723018S16	65
HN4FS723018SS	65
HN4FS723024DASS	65
HN4FS723024DS16	65
HN4FS723024S16	65
HN4FS723024SS	65
HN4FS723124	39
HN4FS723618S16	65
HN4FS723618SS	65
HN4FS723624DASS	65
HN4FS723624DS16	65
HN4FS723624S16	65
HN4FS723624SS	65
HN4FS723630S16	65
HN4FS723630SS	65
HN4FS723636DASS	65
HN4FS723636DS16	65
HN4FS723636S16	65
HN4FS723636SS	65
HN4FS723724	39
HN4FS902420S16	65
HN4FS902420SS	65
HN4FS903620S16	65
HN4FS903620SS	65
HN4FS903624DASS	65
HN4FS903624DS16	65
HN4FS903624S16	65
HN4FS903624SS	65
HN4FS903636DASS	65
HN4FS903636DS16	65
HN4FS903636S16	65
HN4FS903636SS	65
HN4WM24428GY	30
HN4WM24428S16	57
HN4WM24428SS	57
HN4WM24488GY	30
HN4WM24488S16	57
HN4WM24488SS	57
HN4WM304210GY	30
HN4WM304210S16	57
HN4WM304210SS	57
HN4WM304810GY	30
HN4WM304810S16	57
HN4WM304810SS	57
HN4WM306010GY	30
HN4WM306010S16	57
HN4WM306010SS	57
HN4WM364212GY	30
HN4WM364212S16	57
HN4WM364212SS	57
HN4WM364812GY	30
HN4WM364812S16	57
HN4WM364812SS	57
HN4WM366012GY	30
HN4WM366012S16	57
HN4WM366012SS	57
HN4WM424212GY	30
HN4WM424212S16	57
HN4WM424212SS	57
HN4WM424812GY	30
HN4WM424812S16	57
HN4WM424812SS	57
HN4WM426012GY	30
HN4WM426012S16	57
HN4WM426012SS	57
HN4WM484812GY	30
HN4WM484812S16	57
HN4WM484812SS	57
HP100	274
HP100PCGY	275
HP100PCLG	275
HP100SS	274
HP100SSN4	275
HP125	274
HP125PCGY	275
HP125PCLG	275
HP125SS	274
HP125SSN4	275
HP12PCGY	275
HP12PCLG	275
HP150	274
HP150PCGY	275
HP150PCLG	275
HP150SS	274
HP150SSN4	275
HP200	274
HP200PCGY	275
HP200PCLG	275
HP200SS	274
HP200SSN4	275
HP22	274
HP22SS	274
HP22SSN4	275
HP250	274
HP250PCGY	275
HP250PCLG	275
HP300	274
HP300PCGY	275
HP300PCLG	275
HP350	274
HP350PCGY	275
HP350PCLG	275
HP400	274
HP400PCGY	275
HP400PCLG	275
HP50	274
HP50PCGY	275
HP50PCLG	275
HP50SS	274
HP50SSN4	275
HP75	274
HP75PCGY	275
HP75PCLG	275
HP75SS	274

Distributed by Gross Automation | +1 (262) 252-1600. | hammondsales@grossautomation.com

Part Number Index

Part No.	Page
HP75SSN4	275
HPB	274
HPB1105	136
HPB1125	136
HPB1165	136
HPB165	136
HPB185	136
HPBSS	274
HPBSSN4	275
HPLD14	136
HPLD15	136
HPLD16	136
HPLD18	136
HPLD24	136
HPLD25	136
HPLD26	136
HPLD28	136
HPLW110	136
HPLW112	136
HPLW116	136
HPLW118	136
HPLW14	136
HPLW16	136
HPLW18	136
HPLW210	136
HPLW212	136
HPLW216	136
HPLW218	136
HPLW24	136
HPLW26	136
HPLW28	136
HPR16SZPL	145
HPR18SZPL	145
HPR20SZPL	145
HPR22SZPL	145
HSBP145	142
HSBP146	142
HSBP148	142
HSBP165	142
HSBP166	142
HSBP168	142
HSBP184	142
HSBP185	142
HSBP186	142
HSBP188	142
HSBP204	142
HSBP205	142
HSBP206	142
HSBP208	142
HSBP225	142
HSBP226	142
HSBP228	142
HSCRD	144
HSIK	144
HSIP145	142
HSIP146	142
HSIP148	142
HSIP165	142
HSIP166	142
HSIP168	142
HSIP184	142
HSIP185	142
HSIP186	142
HSIP188	142
HSIP204	142
HSIP205	142
HSIP206	142
HSIP208	142
HSIP225	142
HSIP226	142
HSIP228	142
HSP145	137
HSP146	137
HSP148	137
HSP165	137
HSP166	137
HSP168	137
HSP184	137
HSP185	137
HSP186	137
HSP188	137
HSP204	137
HSP205	137
HSP206	137
HSP208	137
HSP225	137
HSP226	137
HSP228	137
HTCM106	138
HTCM126	138
HTCM3106	138
HTCM3126	138
HTCM346	138
HTCM366	138
HTCM386	138
HTCM46	138
HTCM66	138
HTCM86	138
HTCMS36	138
HTCMS6	138
HTH124818	311
HTH124820	311
HTH124824	311
HTH126018	311
HTH126020	311
HTH126024	311
HTH126036	311
HTH127218	311
HTH127220	311
HTH127224	311
HTH127236	311
HVPCI-101	313
HVPCI-105	313
HVPCI-111	313
HVPCI-150	313
HVPCI-170	313
HVPCI-238	313
HW24168GYHK	29
HW24168S16HK	55
HW24168SSHK	55
HW242010GYHK	29
HW242010S16HK	55
HW242010SSHK	55
HW24206GYHK	29
HW24206S16HK	55
HW24206SSHK	55
HW24208GYHK	29
HW24208S16HK	55
HW24208SSHK	55
HW242412GYHK	29
HW242412S16HK	55
HW242412SSHK	55
HW24246GYHK	29
HW24246S16HK	55
HW24246SSHK	55
HW24248GYHK	29
HW24248S16HK	55
HW24248SSHK	55
HW24308GYHK	29
HW24308S16HK	55
HW24308SSHK	55
HW30208GYHK	29
HW30208S16HK	55
HW30208SSHK	55
HW302410GYHK	29
HW302410S16HK	55
HW302410SSHK	55
HW302412GYHK	29
HW302412S16HK	55
HW302412SSHK	55
HW302416GYHK	29
HW302416S16HK	55
HW302416SSHK	55
HW30248GYHK	29
HW30248S16HK	55
HW30248SSHK	55
HW30308GYHK	29
HW30308S16HK	55
HW30308SSHK	55
HW362410GYHK	29
HW362410S16HK	55
HW362410SSHK	55
HW36248GYHK	29
HW36248S16HK	55
HW36248SSHK	55
HW363010GYHK	29
HW363010S16HK	55
HW363010SSHK	55
HW363012GYHK	29
HW363012S16HK	55
HW363012SSHK	55
HW363016GYHK	29
HW363016S16HK	55
HW363016SSHK	55
HW36308GYHK	29
HW36308S16HK	55
HW36308SSHK	55
HW363612GYHK	29
HW363612S16HK	55
HW363612SSHK	55
HW423010GYHK	29
HW423010S16HK	55
HW423010SSHK	55
HW423612GYHK	29
HW423612S16HK	55
HW423612SSHK	55
HW42368GYHK	29
HW42368S16HK	55
HW42368SSHK	55
HW483610GYHK	29
HW483610S16HK	55
HW483610SSHK	55
HW483612GYHK	29
HW483612S16HK	55
HW483612SSHK	55
HW483616GYHK	29
HW483616S16HK	55
HW483616SSHK	55
HW48368GYHK	29
HW48368S16HK	55
HW48368SSHK	55
HW603612GYHK	29
HW603612S16HK	55
HW603612SSHK	55
HW603616GYHK	29
HW603616S16HK	55
HW603616SSHK	55
HWST16128S16	59
HWST16128SS	59
HWST16168S16	59
HWST16168SS	59
HWST201612S16	59
HWST201612SS	59
HWST20168S16	59
HWST20168SS	59
HWST202012S16	59
HWST202012SS	59
HWST20208S16	59
HWST20208SS	59
HWST24208S16	59
HWST24208SS	59
HWST242412S16	59
HWST242412SS	59
HWST24248S16	59
HWST24248SS	59
HWST302412S16	59
HWST302412SS	59
HWST30248S16	59
HWST30248SS	59
HWST30308S16	59
HWST30308SS	59
HWST363012S16	59
HWST363012SS	59
HWST363016S16	59
HWST363016SS	59
HWST36308S16	59
HWST36308SS	59
HWST363612S16	59
HWST363612SS	59
HWST483616S16	59
HWST483616SS	59
HWST603616S16	59
HWST603616SS	59
ISPTPKIT	137
KVDTX	265
LFK1110	261
LFK1510	261
LFK55	261
LFK56	261
LFK610	261
LFK66	261
LFK68	261
LFK810	261
LFK88	261
MHK1	270
MHK1SS	270
MHK2	270
MHK2SS	270
MHK3	270
MHK3SS	270
MHKD1	270
MHKD1SS	270
MHKD2	270
MHKD2SS	270

Distributed by Gross Automation | +1 (262) 252-1600. | hammondsales@grossautomation.com

Technical references and CAD downloads available at www.hammondmfg.com

All dimensions in inches unless specified otherwise

Quality Products. Service Excellence.

© Hammond Manufacturing

Canada: 519.822.2960 or 905.456.3770 USA: 716.630.7030

Data Subject to change without notice

Part Number Index

Part No.	Page
MHKD3	270
MHKD3SS	270
MHKL1	270
MHKL1SS	270
MHKL2	270
MHKL2SS	270
MHKL3	270
MHKL3SS	270
MIKIT	280
MPB1	179
MPB12	172
MPB2	179
MPB3	179
MPB4	179
MPB6	179
MPB9	172
N1A16127	225
N1A16129	225
N1A16167	225
N1A16207	225
N1A20167	225
N1A20169	225
N1A20207	225
N1A20209	225
N1A20249	225
N1A24167	225
N1A242012	225
N1A24207	225
N1A24209	225
N1A242412	225
N1A24247	225
N1A24249	225
N1A30207	225
N1A30209	225
N1A302412	225
N1A30247	225
N1A30249	225
N1A30309	225
N1A36247	225
N1A36249	225
N1A363012	225
N1A36307	225
N1A36309	225
N1A42249	225
N1A423012	225
N1A423612	225
N1A483612	225
N1J10104	224
N1J10106	224
N1J1084	224
N1J1086	224
N1J12104	224
N1J12106	224
N1J12124	224
N1J12126	224
N1J12128	224
N1J14124	224
N1J14126	224
N1J14128	224
N1J16126	224
N1J20126	224
N1J664	224
N1J864	224
N1J884	224
N1J886	224
N1JLK	270
N1JP1010	284
N1JP1010PP	287
N1JP108	284
N1JP108PP	287
N1JP1210	284
N1JP1210PP	287
N1JP1212	284
N1JP1212PP	287
N1JP1412	284
N1JP1412PP	287
N1JP1612	284
N1JP1612PP	287
N1JP2012	284
N1JP2012PP	287
N1JP64	284
N1JP66	284
N1JP66PP	287
N1JP86	284
N1JP86PP	287
N1JP88	284
N1JP88PP	287
N1WF1084	228
N1WF12104	228
N1WF16124	228
N1WF20164	228
N1WF24204	228
N1WF864	228
N1WS1084	227
N1WS1086	227
N1WS1088	227
N1WS12104	227
N1WS12106	227
N1WS12108	227
N1WS16124	227
N1WS16126	227
N1WS16128	227
N1WS20164	227
N1WS20166	227
N1WS20168	227
N1WS24204	227
N1WS24206	227
N1WS24208	227
N1WS864	227
N1WS866	227
N1WS868	227
P1868	284
P2068	280
PBR50BC	301
PBR50BG	301
PBR50BLGR24V	301
PBR50BLRE24V	301
PBR50BLYE24V	301
PBR50CLAM	301
PBR50CLBL	301
PBR50CLCL	301
PBR50CLGR	301
PBR50CLRE	301
PBR50CLYE	301
PBR50L115	301
PBR50L24	301
PBR50LED115	301
PBR50LED24	301
PBR50LS	301
PBR50MG	301
PBR50S100	301
PBR50S250	301
PBR50T100	301
PBR50T250	301
PBR50T400	301
PBR50TG	301
PCJ1082	94
PCJ1082CC	94
PCJ1082CCF	94
PCJ1082CCH	95
PCJ1082CCHF	95
PCJ1082CCL	97
PCJ1082CCLF	97
PCJ1082F	94
PCJ1082H	95
PCJ1082HF	95
PCJ1082L	97
PCJ1082LF	97
PCJ1084	94
PCJ1084CC	94
PCJ1084CCF	94
PCJ1084CCH	95
PCJ1084CCHF	95
PCJ1084CCL	97
PCJ1084CCLF	97
PCJ1084CCNL	96
PCJ1084CCNLF	96
PCJ1084F	94
PCJ1084H	95
PCJ1084HF	95
PCJ1084L	97
PCJ1084LF	97
PCJ1084NL	96
PCJ1084NLF	96
PCJ1086	94
PCJ1086CC	94
PCJ1086CCF	94
PCJ1086CCH	95
PCJ1086CCHF	95
PCJ1086CCL	97
PCJ1086CCLF	97
PCJ1086CCNL	96
PCJ1086CCNLF	96
PCJ1086F	94
PCJ1086H	95
PCJ1086HF	95
PCJ1086L	97
PCJ1086LF	97
PCJ1086NL	96
PCJ1086NLF	96
PCJ12104	94
PCJ12104CC	94
PCJ12104CCF	94
PCJ12104CCH	95
PCJ12104CCHF	95
PCJ12104CCL	97
PCJ12104CCLF	97
PCJ12104CCNL	96
PCJ12104CCNLF	96
PCJ12104F	94
PCJ12104H	95
PCJ12104HF	95
PCJ12104L	97
PCJ12104LF	97
PCJ12104NL	96
PCJ12104NLF	96
PCJ12106	94
PCJ12106CC	94
PCJ12106CCF	94
PCJ12106CCH	95
PCJ12106CCHF	95
PCJ12106CCL	97
PCJ12106CCLF	97
PCJ12106CCNL	96
PCJ12106CCNLF	96
PCJ12106F	94
PCJ12106H	95
PCJ12106HF	95
PCJ12106L	97
PCJ12106LF	97
PCJ12106NL	96
PCJ12106NLF	96
PCJ14126	94
PCJ14126CC	94
PCJ14126CCF	94
PCJ14126CCH	95
PCJ14126CCHF	95
PCJ14126CCL	97
PCJ14126CCLF	97
PCJ14126CCNL	96
PCJ14126CCNLF	96
PCJ14126F	94
PCJ14126H	95
PCJ14126HF	95
PCJ14126L	97
PCJ14126LF	97
PCJ14126NL	96
PCJ14126NLF	96
PCJ16148	94
PCJ16148CC	94
PCJ16148CCF	94
PCJ16148CCH	95
PCJ16148CCHF	95
PCJ16148CCL	97
PCJ16148CCLF	97
PCJ16148CCNL	96
PCJ16148CCNLF	96
PCJ16148F	94
PCJ16148H	95
PCJ16148HF	95
PCJ16148L	97
PCJ16148LF	97
PCJ16148NL	96
PCJ16148NLF	96
PCJ181610	94
PCJ181610CC	94
PCJ181610CCF	94
PCJ181610CCH	95
PCJ181610CCHF	95
PCJ181610CCL	97
PCJ181610CCLF	97
PCJ181610CCNL	96
PCJ181610CCNLF	96
PCJ181610F	94
PCJ181610H	95
PCJ181610HF	95
PCJ181610L	97
PCJ181610LF	97
PCJ181610NL	96
PCJ181610NLF	96
PCJ664	94
PCJ664CC	94
PCJ664CCF	94
PCJ664CCH	95

Distributed by Gross Automation | +1 (262) 252-1600. | hammondsales@grossautomation.com

Part Number Index

Part No.	Page
PCJ664CCHF	95
PCJ664CCL	97
PCJ664CCLF	97
PCJ664CCNL	96
PCJ664CCNLF	96
PCJ664F	94
PCJ664H	95
PCJ664HF	95
PCJ664L	97
PCJ664LF	97
PCJ664NL	96
PCJ664NLF	96
PCJ864	94
PCJ864CC	94
PCJ864CCF	94
PCJ864CCH	95
PCJ864CCHF	95
PCJ864CCL	97
PCJ864CCLF	97
PCJ864CCNL	96
PCJ864CCNLF	96
PCJ864F	94
PCJ864H	95
PCJ864HF	95
PCJ864L	97
PCJ864LF	97
PCJ864NL	96
PCJ864NLF	96
PCJ884	94
PCJ884CC	94
PCJ884CCF	94
PCJ884CCH	95
PCJ884CCHF	95
PCJ884CCL	97
PCJ884CCLF	97
PCJ884CCNL	96
PCJ884CCNLF	96
PCJ884F	94
PCJ884H	95
PCJ884HF	95
PCJ884L	97
PCJ884LF	97
PCJ884NL	96
PCJ884NLF	96
PCJA0505	284
PCJA0705	284
PCJA0808	284
PCJA0907	284
PCJA1109	284
PCJA1311	284
PCJCB4	291
PCJHFH	291
PCJHFPP108	291
PCJHFPP1210	291
PCJHFPP1412	291
PCJHFPP1614	291
PCJHFPP1816	291
PCJHFPP66	291
PCJHFPP86	291
PCJHFPP88	291
PCJHINGECLIP	279
PCJLLPNH	279
PCJLLPSH	279
PCJLTPSH	279
PCJR0505	284
PCJR0705	284
PCJR0808	284
PCJR0907	284
PCJR1109	284
PCJR1311	284
PF11000T12BK	242
PF11000T12BK230	242
PF11000T12BK24	242
PF11000T12LG	242
PF11000T12LG230	242
PF11000T12LG24	242
PF22000T12BK	242
PF22000T12BK230	242
PF22000T12BK24	242
PF22000T12LG	242
PF22000T12LG230	242
PF22000T12LG24	242
PF32000T12BK	243
PF32000T12BK230	243
PF32000T12BK24	243
PF32000T12LG	243
PF32000T12LG230	243
PF32000T12LG24	243
PF33000T12BKSL	246
PF33000T12BKSL2	246
PF33000T12LGSL	246
PF33000T12LGSL2	246
PF330DCT12BKSL2	246
PF330DCT12LGSL2	246
PF42500T12BK	244
PF42500T12BK230	244
PF42500T12BK24	244
PF42500T12LG	244
PF42500T12LG230	244
PF42500T12LG24	244
PF43000T12BK	244
PF43000T12BK230	244
PF43000T12BK24	244
PF43000T12LG	244
PF43000T12LG230	244
PF43000T12LG24	244
PF65000T12BK	245
PF65000T12BK230	245
PF65000T12BKSL	246
PF65000T12BKSL2	246
PF65000T12LG	245
PF65000T12LG230	245
PF65000T12LGSL	246
PF65000T12LGSL2	246
PF66000T12BK	245
PF66000T12BK230	245
PF66000T12LG	245
PF66000T12LG230	245
PF67000T12BK	245
PF67000T12BK230	245
PF67000T12BKSL	246
PF67000T12BKSL2	246
PF67000T12BKSL4	246
PF67000T12LG	245
PF67000T12LG230	245
PF67000T12LGSL	246
PF67000T12LGSL2	246
PF67000T12LGSL4	246
PFA10000BK	247
PFA10000LG	247
PFA20000BK	247
PFA20000LG	247
PFA30000BK	247
PFA30000LG	247
PFA40000BK	247
PFA40000LG	247
PFA60000BK	247
PFA60000LG	248
PFF1000	251
PFF10000	247
PFF2000	251
PFF20000	247
PFF30000	247
PFF4000	251
PFF40000	247
PFF6000	251
PFF60000	247
PFFT60001	247
PFFT60002	247
PHW201610	100
PHW201612	100
PHW20166	100
PHW20168	100
PHW241210	100
PHW24208	100
PHW242410	100
PHW302010	100
PHW30208	100
PHW302410	100
PHW302412	100
PHW30247	100
PHW363010	100
PHW363012	100
PHW483616	100
PHW603616	100
PJ1084	83
PJ1084H	83
PJ1084HP9	181
PJ1084HW	85
PJ1084L	84
PJ1084LW	85
PJ1084P9	181
PJ1084R	86
PJ1084RH	86
PJ1084RHW	86
PJ1084RL	87
PJ1084RLW	87
PJ1084RT	88
PJ1084RTW	88
PJ1084RW	86
PJ1084T	84
PJ1084TW	85
PJ1084W	85
PJ1086	83
PJ1086H	83
PJ1086HP12	181
PJ1086HP9	181
PJ1086HW	85
PJ1086L	84
PJ1086LW	85
PJ1086P12	181
PJ1086P9	181
PJ1086R	86
PJ1086RH	86
PJ1086RHW	86
PJ1086RL	87
PJ1086RLW	87
PJ1086RT	88
PJ1086RTW	88
PJ1086RW	86
PJ1086T	84
PJ1086TW	85
PJ1086W	85
PJ12106	83
PJ12106H	83
PJ12106HP16	181
PJ12106HP20	181
PJ12106HW	85
PJ12106L	84
PJ12106LW	85
PJ12106P16	181
PJ12106P20	181
PJ12106R	86
PJ12106RH	86
PJ12106RHW	86
PJ12106RL	87
PJ12106RLW	87
PJ12106RT	88
PJ12106RTW	88
PJ12106RW	86
PJ12106T	84
PJ12106TW	85
PJ12106W	85
PJ12124	83
PJ12124H	83
PJ12124HW	85
PJ12124L	84
PJ12124LW	85
PJ12124R	86
PJ12124RH	86
PJ12124RHW	86
PJ12124RL	87
PJ12124RLW	87
PJ12124RT	88
PJ12124RTW	88
PJ12124RW	86
PJ12124TW	85
PJ12124W	85
PJ12126	83
PJ12126H	83
PJ12126HW	85
PJ12126L	84
PJ12126LW	85
PJ12126R	86
PJ12126RH	86
PJ12126RHW	86
PJ12126RL	87
PJ12126RLW	87
PJ12126RT	88
PJ12126RTW	88
PJ12126RW	86
PJ12126TW	85
PJ12126W	85
PJ14126	83
PJ14126H	83
PJ14126HP25	181
PJ14126HW	85
PJ14126L	84
PJ14126LW	85
PJ14126P25	181
PJ14126R	86
PJ14126RH	86
PJ14126RHW	86
PJ14126RL	87

Distributed by Gross Automation | +1 (262) 252-1600. | hammondsales@grossautomation.com

© Hammond Manufacturing

Part Number Index

Part No.	Page
PJ14126RLW	87
PJ14126RT	88
PJ14126RTW	88
PJ14126RW	86
PJ14126T	84
PJ14126TW	85
PJ14126W	85
PJ16148	83
PJ16148H	83
PJ16148HP30	181
PJ16148HW	85
PJ16148L	84
PJ16148LW	85
PJ16148P30	181
PJ16148R	86
PJ16148RH	86
PJ16148RHW	86
PJ16148RL	87
PJ16148RLW	87
PJ16148RT	88
PJ16148RTW	88
PJ16148RW	86
PJ16148T	84
PJ16148TW	85
PJ16148W	85
PJ18168	83
PJ18168H	83
PJ18168HP42	181
PJ18168HW	85
PJ18168L	84
PJ18168LW	85
PJ18168P42	181
PJ18168R	86
PJ18168RH	86
PJ18168RHW	86
PJ18168RL	87
PJ18168RLW	87
PJ18168RT	88
PJ18168RTW	88
PJ18168RW	86
PJ18168T	84
PJ18168TW	85
PJ18168W	85
PJ20168	83
PJ20168H	83
PJ20168HW	85
PJ20168L	84
PJ20168LW	85
PJ20168R	86
PJ20168RH	86
PJ20168RHW	86
PJ20168RL	87
PJ20168RLW	87
PJ20168RT	88
PJ20168RTW	88
PJ20168RW	86
PJ20168T	84
PJ20168TW	85
PJ20168W	85
PJ242010RL	87
PJ242010RLW	87
PJ242010RT	88
PJ242010RTW	88
PJ24208RL	87
PJ24208RLW	87
PJ24208RT	88
PJ24208RTW	88
PJ242410RL	87
PJ242410RLW	87
PJ242410RT	88
PJ242410RTW	88
PJ24248RL	87
PJ24248RLW	87
PJ24248RT	88
PJ24248RTW	88
PJ302410RL	87
PJ302410RLW	87
PJ302410RT	88
PJ302410RTW	88
PJ30248RL	87
PJ30248RLW	87
PJ30248RT	88
PJ30248RTW	88
PJ664	83
PJ664H	83
PJ664HP4	181
PJ664HW	85
PJ664L	84
PJ664LW	85
PJ664P4	181
PJ664R	86
PJ664RH	86
PJ664RHW	86
PJ664RL	87
PJ664RLW	87
PJ664RT	88
PJ664RTW	88
PJ664RW	86
PJ664T	84
PJ664TW	85
PJ664W	85
PJ744	82
PJ744FS	82
PJ744P1	180
PJ744P2	180
PJ744P221	180
PJ744P222	180
PJ864	83
PJ864H	83
PJ864HP6	181
PJ864HW	85
PJ864L	84
PJ864LW	85
PJ864P6	181
PJ864R	86
PJ864RH	86
PJ864RHW	86
PJ864RL	87
PJ864RLW	87
PJ864RT	88
PJ864RTW	88
PJ864RW	86
PJ864T	84
PJ864TW	85
PJ864W	85
PJ944	82
PJ944FS	82
PJ944P223	180
PJ944P3	180
PJEC3630123PT	99
PJEC3630123PTW	99
PJEC363012T	99
PJEC363012TW	99
PJFPUWM108	277
PJFPUWM1210	277
PJFPUWM1412	277
PJFPUWM1614	277
PJFPUWM1816	277
PJFPUWM2016	277
PJFPUWM6	277
PJFS722525	101
PJFS724925DD	101
PJHD181610RLF	98
PJHMI108CCH	296
PJHMI108CCHTP	296
PJHMI108CCL	296
PJHMI108H	296
PJHMI108HTP	296
PJHMI108L	296
PJHMI1210CCH	296
PJHMI1210CCHTP	296
PJHMI1210CCL	296
PJHMI1210H	296
PJHMI1210HTP	296
PJHMI1210L	296
PJHMI138CX	297
PJHMI1412CCH	296
PJHMI1412CCHTP	296
PJHMI1412CCL	296
PJHMI1412H	296
PJHMI1412HTP	296
PJHMI1412L	296
PJHMI1614CCH	296
PJHMI1614CCHTP	296
PJHMI1614CCL	296
PJHMI1614H	296
PJHMI1614HTP	296
PJHMI1614L	296
PJHMI66CX	297
PJHMI88CCH	296
PJHMI88CCHTP	296
PJHMI88CCL	296
PJHMI88H	296
PJHMI88HTP	296
PJHMI88L	296
PJHMI95CX	297
PJHMIPROP108	297
PJHMIPROP1210	297
PJHMIPROP1412	297
PJHMIPROP1614	297
PJHMIPROP88	297
PJLKIT316	279
PJP74	82
PJP94	82
PJPOLEMNT10	309
PJPOLEMNT12	309
PJPOLEMNT14	309
PJPOLEMNT16	309
PJPOLEMNT20	309
PJPOLEMNT24	309
PJPOLEMNT30	309
PJPOLEMNT6	309
PJPOLEMNT8	309
PJSKIT316	279
PJSP108	290
PJSP1210	290
PJSP1212	290
PJSP1412	290
PJSP1614	290
PJSP1816	290
PJSP2016	290
PJSP2420	290
PJSP2424	290
PJSP3024	290
PJSPU108	290
PJSPU1210	290
PJSPU1412	290
PJSPU1614	290
PJSPU1816	290
PJSPU2016	290
PJTKIT316	279
PJU1084	91
PJU1084CC	91
PJU1084CCF	91
PJU1084CCH	92
PJU1084CCHF	92
PJU1084CCL	89
PJU1084CCLF	89
PJU1084CCT	90
PJU1084CCTF	90
PJU1084F	91
PJU1084H	92
PJU1084HF	92
PJU1084HW	93
PJU1084HWF	93
PJU1084L	89
PJU1084LF	89
PJU1084LW	93
PJU1084LWF	93
PJU1084T	90
PJU1084TF	90
PJU1084W	93
PJU1084WF	93
PJU12106	91
PJU12106CC	91
PJU12106CCF	91
PJU12106CCH	92
PJU12106CCHF	92
PJU12106CCL	89
PJU12106CCLF	89
PJU12106CCT	90
PJU12106CCTF	90
PJU12106F	91
PJU12106H	92
PJU12106HF	92
PJU12106HW	93
PJU12106HWF	93
PJU12106L	89
PJU12106LF	89
PJU12106LW	93
PJU12106LWF	93
PJU12106T	90
PJU12106TF	90
PJU12106W	93
PJU12106WF	93
PJU14126	91
PJU14126CC	91
PJU14126CCF	91
PJU14126CCH	92
PJU14126CCHF	92
PJU14126CCL	89
PJU14126CCLF	89
PJU14126CCT	90
PJU14126CCTF	90

Distributed by Gross Automation | +1 (262) 252-1600. | hammondsales@grossautomation.com

Part Number Index

Part No.	Page
PJU14126F	91
PJU14126H	92
PJU14126HF	92
PJU14126HW	93
PJU14126HWF	93
PJU14126L	89
PJU14126LF	89
PJU14126LW	93
PJU14126LWF	93
PJU14126T	90
PJU14126TF	90
PJU14126W	93
PJU14126WF	93
PJU16148	91
PJU16148CC	91
PJU16148CCF	91
PJU16148CCH	92
PJU16148CCHF	92
PJU16148CCL	89
PJU16148CCLF	89
PJU16148CCT	90
PJU16148CCTF	90
PJU16148F	91
PJU16148H	92
PJU16148HF	92
PJU16148HW	93
PJU16148HWF	93
PJU16148L	89
PJU16148LF	89
PJU16148LW	93
PJU16148LWF	93
PJU16148T	90
PJU16148TF	90
PJU16148W	93
PJU16148WF	93
PJU181610	91
PJU181610F	91
PJU181610H	92
PJU181610HF	92
PJU181610HW	93
PJU181610HWF	93
PJU181610L	89
PJU181610LF	89
PJU181610LW	93
PJU181610LWF	93
PJU181610T	90
PJU181610TF	90
PJU181610W	93
PJU181610WF	93
PJU201610	91
PJU201610F	91
PJU201610H	92
PJU201610HF	92
PJU201610HW	93
PJU201610HWF	93
PJU201610L	89
PJU201610LF	89
PJU201610LW	93
PJU201610LWF	93
PJU201610T	90
PJU201610TF	90
PJU201610W	93
PJU201610WF	93
PJU664	309
PJU664CC	91
PJU664CCF	91
PJU664CCH	92
PJU664CCHF	92
PJU664CCL	89
PJU664CCLF	89
PJU664CCT	90
PJU664CCTF	90
PJU664F	91
PJU664H	92
PJU664HF	92
PJU664HW	93
PJU664HWF	93
PJU664L	89
PJU664LF	89
PJU664LW	93
PJU664LWF	93
PJU664T	90
PJU664TF	90
PJU664W	93
PJU664WF	93
PJU864	91
PJU864CC	91
PJU864CCF	91
PJU864CCH	92
PJU864CCHF	92
PJU864CCL	89
PJU864CCLF	89
PJU864CCT	90
PJU864CCTF	90
PJU864F	91
PJU864H	92
PJU864HF	92
PJU864HW	93
PJU864HWF	93
PJU864L	89
PJU864LF	89
PJU864LW	93
PJU864LWF	93
PJU864T	90
PJU864TF	90
PJU864W	93
PJU864WF	93
PJUTKIT316	279
PJW363014L	99
PJW363014L3PT	99
PJW363610L	99
PJW363610L3PT	99
PJW363614L	99
PJW363614L3PT	99
PJW483610L	99
PJW483610L3PT	99
PJW483614L	99
PJW483614L3PT	99
PJW4NFS	278
PJW4NLS	278
PJW4NUFS	278
PJW4NULFS	278
PJW603610L	99
PJW603610L3PT	99
PJW603614L	99
PJW603614L3PT	99
PKS3042A115N4SS	238
PKS3092A115N4SS	238
PKS3131A115LG	237
PKS3131A230LG	237
PKS3131A460LG	237
PKS3133A115N4LG	238
PKS3133A230N4LG	238
PKS3133A460N4LG	238
PKS3134A115N4SS	238
PKS3134A230N4SS	238
PKS3134A460N4SS	238
PKS3201A115LG	237
PKS3201A230LG	237
PKS3201A460LG	237
PKS3203A115N4LG	238
PKS3203A230N4LG	238
PKS3203A460N4LG	238
PKS3204A115N4SS	238
PKS3204A230N4SS	238
PKS3204A460N4SS	238
PKS3301A115LG	237
PKS3301A230LG	237
PKS3301A460LG	237
PKS3303A115N4LG	238
PKS3303A230N4LG	238
PKS3303A460N4LG	238
PKS3304A115N4SS	238
PKS3304A230N4SS	238
PKS3304A460N4SS	238
PKS3361A115LG	237
PKS3361A230LG	237
PKS3361A460LG	237
PKS3363A115N4LG	238
PKS3363A230N4LG	238
PKS3363A460N4LG	238
PKS3364A115N4SS	238
PKS3364A230N4SS	238
PKS3364A460N4SS	238
PKT1212	305
PKT1212S	305
PKT66	305
PKT99	305
PMH15GY	310
PMH25GY	310
PMH35GY	310
PMKEY	145
PMSTRAP40	310
PMSTRAP55	310
PMV1216GY	310
PMV2024GY	310
PMV3036GY	310
PMV4248GY	310
PPGPFPA	255
PPGPFPA230	255
PTF60500LG	248
PTF60500LG230	248
PTF60700LG	248
PTF60700LG230	248
PTF61000LG	248
PTF61000LG230	248
PWS3062A115N4LG	239
PWS3062A115N4SS	240
PWS3062A230N4LG	239
PWS3062A230N4SS	240
PWS3102A115N4LG	239
PWS3102A115N4SS	240
PWS3102A230N4LG	239
PWS3102A230N4SS	240
PWS3152A115N4LG	239
PWS3152A115N4SS	240
PWS3152A230N4LG	239
PWS3152A230N4SS	240
PWS31X2A230N4LG	239
PWS31X2A460N4SS	240
PWS3202A115N4LG	239
PWS3202A115N4SS	240
PWS3202A230N4LG	239
PWS3202A230N4SS	240
PWS3302A115N4LG	239
PWS3302A115N4SS	240
PWS3302A230N4LG	239
PWS3302A230N4SS	240
PWS3502A115N4LG	239
PWS3502A115N4SS	240
PWS3502A230N4LG	239
PWS3502A230N4SS	240
PWS7102A115N4LG	239
PWS7102A115N4SS	240
PWS7102A230N4LG	239
PWS7102A230N4SS	240
PWS7332A115N4LG	239
PWS7332A115N4SS	240
PWS7332A230N4LG	239
PWS7332A230N4SS	240
R100-060-000	74
R100-062-000	74
R100-064-000	74
R100-066-000	74
R100-080-000	74
R100-082-000	74
R100-084-000	74
R100-100-000	74
R100-102-000	74
R100-104-000	74
R100-120-000	74
R100-122-000	74
R100-124-000	74
R100-160-000	74
R100-162-000	74
R100-164-000	74
R100-166-000	74
R100-200-000	74
R100-202-000	74
R100-204-000	74
R100-240-000	74
R100-242-000	74
R100-244-000	74
R100-320-000	74
R100-322-000	74
R100-324-000	74
R130-120-000	80
R130-122-000	80
R130-124-000	80
R130-160-000	80
R130-162-000	80
R130-164-000	80
R130-200-000	80
R130-202-000	80
R140-045-000R	171
R144-021-000R	169
R144-022-000R	169
R144-041-000R	169
R144-042-000R	169
R144-301-000	166
R144-311-000	166
R144-311-500	166
R144-321-000	166
R144-321-500	166

Distributed by Gross Automation | +1 (262) 252-1600. | hammondsales@grossautomation.com

© Hammond Manufacturing

Part Number Index

Part No.	Page
R147-005-000R	171
R147-005-200R	171
R147-010-000R	171
R147-010-200R	171
R147-015-000R	170
R147-015-200R	170
R147-020-000R	170
R147-020-200R	170
R147-025-000R	169
R147-025-200R	169
R147-030-000R	171
R147-030-200R	171
R147-035-000R	170
R147-035-200R	170
R149-005-000	168
R149-005-001	168
R149-010-000	168
R149-010-001	168
R149-015-000	168
R149-020-000	167
R149-020-001	167
R149-025-001	166
R149-025-500	166
R149-025-501	166
R149-030-000	167
R149-030-001	168
R149-035-000	167
R149-035-001	167
R149-040-000	167
R501-000-011	74
R501-000-012	74
R501-002-080	74
R501-002-100	74
R507-062-000	74
R507-064-000	74
R507-066-000	74
R507-080-000	74
R507-082-000	74
R507-084-000	74
R507-100-000	74
R507-102-000	74
R507-104-000	74
R507-120-000	74
R507-122-000	74
R507-124-000	74
R507-160-000	74
R507-162-000	74
R507-164-000	74
R507-166-000	74
R507-200-000	74
R507-202-000	74
R507-204-000	74
R507-240-000	74
R507-242-000	74
R507-244-000	74
R507-320-000	74
R507-322-000	74
R507-324-000	74
R510-000-000	74
RCNIT	140
RH20000GY	252
RH20000LG	252
RH20000N4GY	253
RH20000N4LG	253
RH20000N4S16	253
RH20000N4S16FDA	253
RH20000N4SS	253
RH20000N4SSFDA	253
RH20000SS	252
RH30000N4GY	253
RH30000N4LG	253
RH30000N4S16	253
RH30000N4S16FDA	253
RH30000N4SS	253
RH30000N4SSFDA	253
RH40000GY	252
RH40000LG	252
RH40000N4GY	253
RH40000N4LG	253
RH40000N4S16	253
RH40000N4S16FDA	253
RH40000N4SS	253
RH40000N4SSFDA	253
RH40000SS	252
RH60000GY	252
RH60000LG	252
RH60000N4GY	253
RH60000N4LG	253
RH60000N4S16	253
RH60000N4S16FDA	253
RH60000N4SS	253
RH60000N4SSFDA	253
RH60000SS	252
RHA20000G	252
RHA40000G	252
RHA60000G	252
SCR027009	257
SCR027009230	257
SCR027019	257
SDA412	260
SDV180-1	259
SDV280-1	259
SDVN4XN2	261
SHG14000	257
SHG14001	257
SHG14003	257
SHG14005	257
SHG14006	257
SHG14007	257
SHG14008	257
SHGL04600	256
SHGL04601	256
SHGM1410	258
SHGM1420	258
SHGM1430	258
SHV031029	258
SHV031039	258
SHV031139	258
SHV031149	258
SHV031159	258
SKH600NCC	263
SKT011409NC	262
SKT011409NC-C	262
SKT011419NO	262
SKT011419NO-C	262
SKTD541	263
SKTD541C	263
SKTD542	263
SKTD542C	263
SKTD543	263
SKTD543C	263
SKTH012009	264
SKTH012009-C	264
SPB1	288
SPB2	288
SSD03504001	299
ST12126LG	23
ST161208SS	51
ST16126LG	23
ST161608SS	51
ST16168LG	23
ST1MFSS316	279
ST201608SS	51
ST201612SS	51
ST20166LG	23
ST20168LG	23
ST202008SS	51
ST202012SS	51
ST20206LG	23
ST20208LG	23
ST242008SS	51
ST24208LG	23
ST242408SS	51
ST242410LG	23
ST242412LG	23
ST242412SS	51
ST24248LG	23
ST2MFSS316	279
ST302408SS	51
ST302410LG	23
ST302412LG	23
ST302412SS	51
ST302420LG	23
ST30248LG	23
ST303008SS	51
ST30308LG	23
ST363008SS	51
ST363010LG	23
ST363012LG	23
ST363012SS	51
ST363016LG	23
ST363016SS	51
ST36308LG	23
ST363612LG	23
ST363612SS	51
ST483610LG	23
ST483612LG	23
ST483616LG	23
ST483616SS	51
ST4MFSS316	279
ST603612LG	23
ST603616SS	51
ST6MFSS316	279
THK1	271
THK2	271
THK3	271
UHDM7218BPA	123
UHDM7218ECA	123
UHDM7218EPA	123
UHDM724118MFTC	123
UHDM724118SFTC	123
UHDM727818SFTC	123
UHDM727918MFTC	123
UHDM8418BPA	123
UHDM8418ECA	123
UHDM8418EPA	123
UHDM8424BPA	123
UHDM8424ECA	123
UHDM8424EPA	123
UHDM844118MFTC	123
UHDM844118SFTC	123
UHDM844124MFTC	123
UHDM844124SFTC	123
UHDM847818SFTC	123
UHDM847824SFTC	123
UHDM847918MFTC	123
UHDM847924MFTC	123
UHDMFTC72BK	123
UHDMFTC84BK	123
XF10115	249
XF10230	249
XF4115	249
XF4230	249
XF6115	249
XF6230	249
XFF10	249
XFF4	249
XFF6	249
XFG10	249
XFG4	249
XFG6	249
XPFA120BK	251
XPFA120CG	251
XPFA120GY	251
XPFA120LG	251
XPFA150BK	251
XPFA150CG	251
XPFA150GY	251
XPFA150LG	251
XPFA254BK	251
XPFA254CG	251
XPFA254GY	251
XPFA254LG	251
XPFA80BK	251
XPFA80CG	251
XPFA80GY	251
XPFA80LG	251

Distributed by Gross Automation | +1 (262) 252-1600. | hammondsales@grossautomation.com

E7 Catalog Format

With extensive user availability to web resources, the content of this E7 catalog has been streamlined to show critical buying information. Detailed dimensional drawings can now easily be accessed at **www.hammondmfg.com** ensuring you always see the most current data.

Please see the illustration below highlighting this catalog's key layout features.

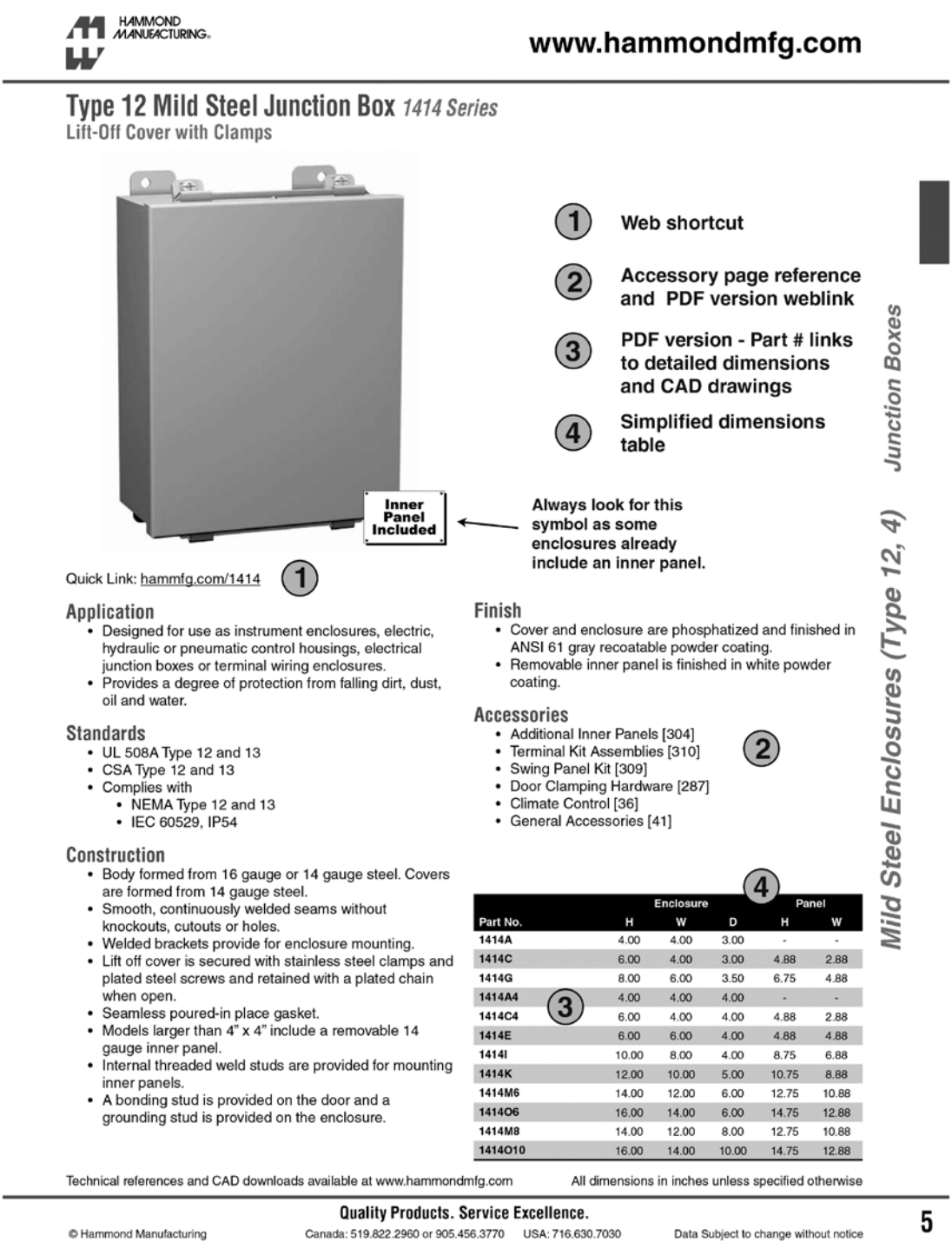

HAMMOND MANUFACTURING
www.hammondmfg.com

Type 12 Mild Steel Junction Box *1414 Series*

Lift-Off Cover with Clamps

Inner Panel Included

1. Web shortcut
2. Accessory page reference and PDF version weblink
3. PDF version - Part # links to detailed dimensions and CAD drawings
4. Simplified dimensions table

Always look for this symbol as some enclosures already include an inner panel.

Quick Link: hammfg.com/1414 (1)

Application
- Designed for use as instrument enclosures, electric, hydraulic or pneumatic control housings, electrical junction boxes or terminal wiring enclosures.
- Provides a degree of protection from falling dirt, dust, oil and water.

Standards
- UL 508A Type 12 and 13
- CSA Type 12 and 13
- Complies with
  - NEMA Type 12 and 13
  - IEC 60529, IP54

Construction
- Body formed from 16 gauge or 14 gauge steel. Covers are formed from 14 gauge steel.
- Smooth, continuously welded seams without knockouts, cutouts or holes.
- Welded brackets provide for enclosure mounting.
- Lift off cover is secured with stainless steel clamps and plated steel screws and retained with a plated chain when open.
- Seamless poured-in place gasket.
- Models larger than 4" x 4" include a removable 14 gauge inner panel.
- Internal threaded weld studs are provided for mounting inner panels.
- A bonding stud is provided on the door and a grounding stud is provided on the enclosure.

Finish
- Cover and enclosure are phosphatized and finished in ANSI 61 gray recoatable powder coating.
- Removable inner panel is finished in white powder coating.

Accessories
- Additional Inner Panels [304]
- Terminal Kit Assemblies [310]
- Swing Panel Kit [309]
- Door Clamping Hardware [287]
- Climate Control [36]
- General Accessories [41]

(2)

(3)

(4)

Part No.	Enclosure H	Enclosure W	Enclosure D	Panel H	Panel W
1414A	4.00	4.00	3.00	-	-
1414C	6.00	4.00	3.00	4.88	2.88
1414G	8.00	6.00	3.50	6.75	4.88
1414A4	4.00	4.00	4.00	-	-
1414C4	6.00	4.00	4.00	4.88	2.88
1414E	6.00	6.00	4.00	4.88	4.88
1414I	10.00	8.00	4.00	8.75	6.88
1414K	12.00	10.00	5.00	10.75	8.88
1414M6	14.00	12.00	6.00	12.75	10.88
1414O6	16.00	14.00	6.00	14.75	12.88
1414M8	14.00	12.00	8.00	12.75	10.88
1414O10	16.00	14.00	10.00	14.75	12.88

Technical references and CAD downloads available at www.hammondmfg.com
All dimensions in inches unless specified otherwise

Quality Products. Service Excellence.

© Hammond Manufacturing
Canada: 519.822.2960 or 905.456.3770 USA: 716.630.7030
Data Subject to change without notice

5

Mild Steel Enclosures (Type 12, 4) Junction Boxes

Distributed by Gross Automation | +1 (262) 252-1600. | hammondsales@grossautomation.com

Technical references and CAD downloads available at www.hammondmfg.com
All dimensions in inches unless specified otherwise

Quality Products. Service Excellence.

© Hammond Manufacturing
Canada: 519.822.2960 or 905.456.3770 USA: 716.630.7030
Data Subject to change without notice